SKF Power Transmission products

® SKF is a registered trademark of the SKF Group.

Hytrel is a registered trademark of DuPont. Dacromet and Dacrotized are registered trademarks of Metal Coatings International Inc. Corporation.

© SKF Group 2014

The contents of this publication are the copyright of the publisher and may not be reproduced (even extracts) unless prior written permission is granted. Every care has been taken to ensure the accuracy of the information contained in this publication but no liability can be accepted for any loss or damage whether direct, indirect or consequential arising out of the use of the information contained herein.

PUB PT/P1 11015 EN · Edition 3 · December 2014

This publication supersedes publication PUB PT/P1 11015 EN.

Contents

1 SKF Belts 9

2 SKF Chains 73

3 SKF Couplings 101

4 SKF Bushings and Hubs..... 135

5 SKF Sprockets 161

6 SKF Pulleys..... 239

7 Smart tools..... 323

The SKF brand now stands for more than ever before, and means more to you as a valued customer.

While SKF maintains its leadership as a high-quality bearing manufacturer throughout the world, new dimensions in technical advances, product support and services have evolved SKF into a truly solutions-oriented supplier, creating greater value for customers.

These solutions enable customers to improve productivity, not only with breakthrough application-specific products, but also through leading-edge design simulation tools and consultancy services, plant asset efficiency maintenance programmes, and the industry's most advanced supply management techniques.

The SKF brand still stands for the very best in rolling bearings, but it now stands for much more.

SKF – the knowledge engineering company

Foreword

Power transmission products play an important role in overall bearing performance and are the vital link between moving parts in equipment. By creating its own range of power transmission products, SKF can offer products that are well-matched and give engineers a wide design choice according to performance and cost considerations.

Bringing power transmission products under a single brand offers significant user benefits apart from the confidence that comes from using a well-known brand. SKF can provide a convenient single supply source for products and services with a large number of items in stock. This, in turn, offers the chance to simplify logistics to end users and reduce administrative work.

As bearings and other power transmission components work together in products used in many industries, many bearing problems and failures can be identified through the knowledge of power transmission. Examples of those industries are food and beverage, oil and gas, pulp and paper, textile, metalworking, packaging, mining, mineral processing and cement, agriculture and material handling. Combining an understanding of bearing systems with power transmission gives SKF the opportunity to enhance the support available to users.

All SKF Power Transmission products are identified by an SKF specific designation prefix. Apart from that, the designation follows international standards for easy recognition and cross-referencing. The SKF Power Transmission range covers most common types of products, which can be divided into six main categories - belts, pulleys, chains, sprockets, couplings as well as bushings and hubs.

About the data in this catalogue

The data in this catalogue relates to SKF's state-of-the-art technology as of mid-2010. This data may differ from that shown in earlier catalogues because of revised methods of calculation, redesign or technological developments.

SKF reserves the right to make continuing improvements to SKF products with respect to materials, design and manufacturing methods, as well as changes necessitated by technological developments.

Other Power Transmission catalogues

Product information is also available via the SKF Power Transmission products website at www.skfptp.com. The website not only provides product information, but also online calculation tools, drawings, and search and selection functions.

The main printed SKF Power Transmission catalogues are:

- SKF Transmission chain catalogue
- SKF Couplings catalogue
- SKF FX Keyless Bushings catalogue
- SKF Xtra Power Belts catalogue
- SKF Conveyor Chain catalogue

For more information about SKF Power Transmission products, contact your local SKF representative or SKF Authorized Distributor.

SKF – the knowledge engineering company

From one simple but inspired solution to a misalignment problem in a textile mill in Sweden, and fifteen employees in 1907, SKF has grown to become a global industrial knowledge leader. Over the years, we have built on our expertise in bearings, extending it to seals, mechatronics, services and lubrication systems. Our knowledge network includes 46 000 employees, 15 000 distributor partners, offices in more than 130 countries, and a growing number of SKF Solution Factory sites around the world.

Research and development
We have hands-on experience in over forty industries based on our employees' knowledge of real life conditions. In addition, our world-leading experts and university partners pioneer advanced theoretical research and development in areas including tribology, condition monitoring, asset management and bearing life theory. Our ongoing commitment to research and development helps us keep our customers at the forefront of their industries.

Meeting the toughest challenges
Our network of knowledge and experience, along with our understanding of how our core technologies can be combined, helps us create innovative solutions that meet the toughest of challenges. We work closely with our customers throughout the asset life cycle, helping them to profitably and re spon sibly grow their businesses.

Working for a sustainable future
Since 2005, SKF has worked to reduce the negative environmental impact from our operations and those of our suppliers. Our continuing technology development resulted in the introduction of the SKF BeyondZero portfolio of products and services which imrove efficiency and reduce energy losses, as well as enable new technol ogies haressing wind, solar and ocean power. This combined approach helps reduce the environmental impact both in our oper ations andour customers' oper ations.

SKF Solution Factory makes SKF knowledge and manu facturing expertise available locally to provide unique solutions and services to our customers.

Working with SKF IT and logistics systems and application experts, SKF Authorized Distributors deliver a valuable mix of product and application knowledge to customers worldwide.

Our knowledge – your success

SKF Life Cycle Management is how we combine our technology platforms and advanced services, and apply them at each stage of the asset life cycle, to help our customers to be more successful, sustainable and profitable.

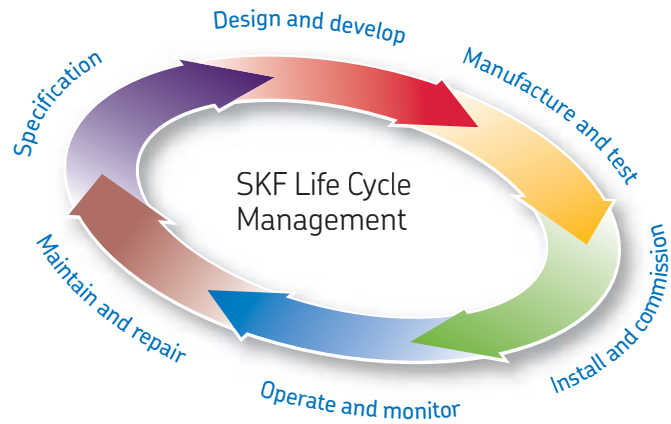

Working closely with you
Our objective is to help our customers improve productivity, minimize maintenance, achieve higher energy and resource efficiency, and optimize designs for long service life and reliability.

Innovative solutions
Whether the application is linear or rotary or a combination, SKF engineers can work with you at each stage of the asset life cycle to improve machine performance by looking at the entire application. This approach doesn't just focus on individual components like bearings or seals. It looks at the whole application to see how each com po nent interacts with each other.

Design optimization and verification
SKF can work with you to optimize current or new designs with proprietary 3-D modelling software that can also be used as a virtual test rig to confirm the integrity of the design.

Bearings
SKF is the world leader in the design, development and manufacture of high performance rolling bearings, plain bearings, bearing units and housings.

Machinery maintenance
Condition monitoring technologies and maintenance services from SKF can help minimize unplanned downtime, improve operational efficiency and reduce maintenance costs.

Sealing solutions
SKF offers standard seals and custom engineered sealing solutions to increase uptime, improve machine reliability, reduce friction and power losses, and extend lubricant life.

Mechatronics
SKF fly-by-wire systems for aircraft and drive-by-wire systems for off-road, agricultural and forklift applications replace heavy, grease or oil consuming mechanical and hydraulic systems.

Lubrication solutions
From specialized lubricants to state-of-the-art lubrication systems and lubrication management ser vices, lubrication solutions from SKF can help to reduce lubrication related downtime and lubricant consumption.

Actuation and motion control
With a wide assortment of products – from actuators and ball screws to profile rail guides – SKF can work with you to solve your most pressing linear system challenges.

Belts

SKF Wrapped Wedge Belts. 12

SKF Wrapped Classical Belts 14

SKF Wrapped Narrow Wedge Belts 18

SKF Cogged Raw Edge Wedge Belts 19

SKF Cogged Raw Edge Classical Belts. 22

SKF Cogged Raw Edge Narrow Wedge Belts. 24

SKF Xtra Power Wrapped Wedge Belts. 25

SKF Xtra Power Wrapped Narrow Wedge Belts. 27

Variable speed belts. 28

SKF Banded Wedge Belts. 29

SKF Banded Classical Belts 30

SKF Banded Narrow Wedge Belts . . 31

SKF Double Classical (Hex) Belts . . . 32

SKF Ribbed Belts 33

SKF Classical Timing Belts. 36

SKF Double-sided Classical Timing Belts. 46

SKF HiTD Belts. 51

SKF Double-sided HiTD Belts. 56

Super torque timing belts 59

Double-sided super torque timing belts. 63

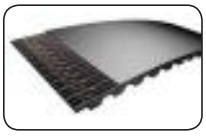
SKF Metric Timing Belts. 65

SKF Double-sided Metric Timing Belts. 68

SKF Belts

SKF belt range nomenclature has a defined prefix of PHG. All belts we produce conform to conventional basic part number format – ISO, BS, RMA or DIN.

V Belts

The V belt designation format is constant through the range, with the following example to indicate set up.

SKF Designation prefix PHG SPB 1800 XP

Belt type
Wedge – SPZ, SPA, SPB, SPC
Wedge CRE – XPZ, XPA, XPB XPC
Classical – Z, A, B, C, D, E
Classical CRE – ZX, AX, BX, CX
Narrow wedge – 3V, 5V, 8V
Narrow wedge CRE – 3VX, 5VX, 8VX
Double classical – AA, BB, CC
Ribbed – PJ, PK, PL, PM

Belt lengths
Wedge all – pitch length (mm)
Narrow wedge all – outside length (1/100 inch)
Classical all – inside length (inch)
Ribbed – pitch length (mm)

Supplementary
Wedge & Narrow wedge – XP Xtra Power
Wedge, Narrow wedge, Classical banded belts – X??, for number of joined belts in each band

Note
Ribbed belts will list number of ribs before the Belt type

SKF Belts

SKF belt range nomenclature has a defined prefix of PHG. All belts we produce conform to conventional basic part number format – ISO, BS, RMA or DIN.

Timing Belts

The Timing belt designation format is constant through the range, with the following example to indicate set up.

SKF Designation prefix — PHG D-198-XL-025

Belt lengths
Supplementary – D, DA, DB – double siding of belt

Belt lengths
Classical – pitch length (1/10 inch)
HiTD – pitch length (mm)
STS – pitch length (mm)
Metric – pitch length (mm)

Belt type
Classical – MXL, XL, L, H, XH, XXH
HiTD – 2M, 3M, 5M, 8M, 14M
STS – S2M, S3M, S4.5M, S5M, S8M, S14M
Metric polyurethane – T2.5, T5, T10, T20, AT2.5, AT5, AT10

Belt width
Classical – 1/100 of inch
HiTD – millimeters (mm)
STS – millimeters (mm)
Metric – millimeters (mm)

Note
Options available for long length open ended rolls – refer to SKF

Belts (PHG Product Group)

SKF belts are manufactured to a "worldwide" specification, PTP-0299 (Feb 2000), which is compatible with all commonly used standards:

- wrapped and cogged belts are manufactured according to GB 1171 and BS 3790
- timing belts are in accordance with quality standards GB/T13487-1992 and GB/T11616-1989
- length and tolerance control of MXL, XL, L, H, XH, XXH profiles are done in accordance with ISO 5296-1
- measurement tolerance testing is done in accordance with ISO 4184
- SKF belts are manufactured to be anti-static and as such comply with ATEX directive requirements (static conductivity testing is done in accordance with ISO 1813)
- equipment testing is done in accordance with ISO 255-1990

Belts could be stored for 12 (twelve) years without affecting expected working life if the storage is done in optimum conditions.

Main materials used in timing belts

	Classical (MXL, L, H, XH, XXH)	HiTD (3M, 5M, 8M, 14M)	Polyurethane metric (T2.5, T5, T10, AT2.5, AT5, AT10) Truly Endless	Polyurethane metric (T2.5, T5, T10, AT2.5, AT5, AT10) Open Ended
Tensile member (cord)	Fiberglass	Fiberglass	Steel cord / Kevlar cord	Steel cord / Kevlar cord
Tooth compound	CR	CR	Polyurethane	Polyurethane
Tooth facing fabric	Nylon	Nylon	no fabric	Nylon available
Backing fabric	CR	CR	no fabric	Nylon available

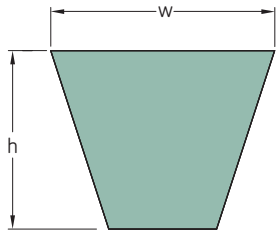

Section	Dimensions Pitch length	w	h	Designation
–	mm			–
SPZ	512	9,7	8	**PHG SPZ512**
	560	9,7	8	**PHG SPZ560**
	562	9,7	8	**PHG SPZ562**
	587	9,7	8	**PHG SPZ587**
	612	9,7	8	**PHG SPZ612**
	630	9,7	8	**PHG SPZ630**
	637	9,7	8	**PHG SPZ637**
	662	9,7	8	**PHG SPZ662**
	670	9,7	8	**PHG SPZ670**
	687	9,7	8	**PHG SPZ687**
	710	9,7	8	**PHG SPZ710**
	722	9,7	8	**PHG SPZ722**
	737	9,7	8	**PHG SPZ737**
	750	9,7	8	**PHG SPZ750**
	760	9,7	8	**PHG SPZ760**
	762	9,7	8	**PHG SPZ762**
	772	9,7	8	**PHG SPZ772**
	787	9,7	8	**PHG SPZ787**
	800	9,7	8	**PHG SPZ800**
	812	9,7	8	**PHG SPZ812**
	825	9,7	8	**PHG SPZ825**
	837	9,7	8	**PHG SPZ837**
	850	9,7	8	**PHG SPZ850**
	862	9,7	8	**PHG SPZ862**
	875	9,7	8	**PHG SPZ875**
	887	9,7	8	**PHG SPZ887**
	900	9,7	8	**PHG SPZ900**
	912	9,7	8	**PHG SPZ912**
	925	9,7	8	**PHG SPZ925**
	937	9,7	8	**PHG SPZ937**
	950	9,7	8	**PHG SPZ950**
	962	9,7	8	**PHG SPZ962**
	987	9,7	8	**PHG SPZ987**
	1 000	9,7	8	**PHG SPZ1000**
	1 010	9,7	8	**PHG SPZ1010**
	1 012	9,7	8	**PHG SPZ1012**
	1 024	9,7	8	**PHG SPZ1024**
	1 037	9,7	8	**PHG SPZ1037**
	1 047	9,7	8	**PHG SPZ1047**
	1 060	9,7	8	**PHG SPZ1060**
	1 077	9,7	8	**PHG SPZ1077**
	1 080	9,7	8	**PHG SPZ1080**
	1 087	9,7	8	**PHG SPZ1087**
	1 112	9,7	8	**PHG SPZ1112**
	1 120	9,7	8	**PHG SPZ1120**
	1 137	9,7	8	**PHG SPZ1137**
	1 140	9,7	8	**PHG SPZ1140**
	1 150	9,7	8	**PHG SPZ1150**
	1 162	9,7	8	**PHG SPZ1162**
	1 180	9,7	8	**PHG SPZ1180**
	1 187	9,7	8	**PHG SPZ1187**
	1 200	9,7	8	**PHG SPZ1200**
	1 202	9,7	8	**PHG SPZ1202**
	1 212	9,7	8	**PHG SPZ1212**
	1 237	9,7	8	**PHG SPZ1237**

Section	Dimensions Pitch length	w	h	Designation
–	mm			–
SPZ	1 250	9,7	8	**PHG SPZ1250**
	1 262	9,7	8	**PHG SPZ1262**
	1 270	9,7	8	**PHG SPZ1270**
	1 287	9,7	8	**PHG SPZ1287**
	1 312	9,7	8	**PHG SPZ1312**
	1 320	9,7	8	**PHG SPZ1320**
	1 337	9,7	8	**PHG SPZ1337**
	1 340	9,7	8	**PHG SPZ1340**
	1 347	9,7	8	**PHG SPZ1347**
	1 362	9,7	8	**PHG SPZ1362**
	1 387	9,7	8	**PHG SPZ1387**
	1 400	9,7	8	**PHG SPZ1400**
	1 412	9,7	8	**PHG SPZ1412**
	1 420	9,7	8	**PHG SPZ1420**
	1 437	9,7	8	**PHG SPZ1437**
	1 462	9,7	8	**PHG SPZ1462**
	1 487	9,7	8	**PHG SPZ1487**
	1 500	9,7	8	**PHG SPZ1500**
	1 512	9,7	8	**PHG SPZ1512**
	1 520	9,7	8	**PHG SPZ1520**
	1 537	9,7	8	**PHG SPZ1537**
	1 562	9,7	8	**PHG SPZ1562**
	1 587	9,7	8	**PHG SPZ1587**
	1 600	9,7	8	**PHG SPZ1600**
	1 612	9,7	8	**PHG SPZ1612**
	1 637	9,7	8	**PHG SPZ1637**
	1 650	9,7	8	**PHG SPZ1650**
	1 662	9,7	8	**PHG SPZ1662**
	1 687	9,7	8	**PHG SPZ1687**
	1 700	9,7	8	**PHG SPZ1700**
	1 737	9,7	8	**PHG SPZ1737**
	1 750	9,7	8	**PHG SPZ1750**
	1 762	9,7	8	**PHG SPZ1762**
	1 787	9,7	8	**PHG SPZ1787**
	1 800	9,7	8	**PHG SPZ1800**
	1 812	9,7	8	**PHG SPZ1812**
	1 837	9,7	8	**PHG SPZ1837**
	1 850	9,7	8	**PHG SPZ1850**
	1 862	9,7	8	**PHG SPZ1862**
	1 887	9,7	8	**PHG SPZ1887**
	1 900	9,7	8	**PHG SPZ1900**
	1 937	9,7	8	**PHG SPZ1937**
	1 950	9,7	8	**PHG SPZ1950**
	1 987	9,7	8	**PHG SPZ1987**
	2 000	9,7	8	**PHG SPZ2000**
	2 037	9,7	8	**PHG SPZ2037**
	2 060	9,7	8	**PHG SPZ2060**
	2 120	9,7	8	**PHG SPZ2120**
	2 137	9,7	8	**PHG SPZ2137**
	2 160	9,7	8	**PHG SPZ2160**
	2 187	9,7	8	**PHG SPZ2187**
	2 240	9,7	8	**PHG SPZ2240**
	2 262	9,7	8	**PHG SPZ2262**
	2 280	9,7	8	**PHG SPZ2280**
	2 287	9,7	8	**PHG SPZ2287**

Section	Dimensions Pitch length	w	h	Designation
–	mm			–
SPZ	2 360	9,7	8	**PHG SPZ2360**
	2 410	9,7	8	**PHG SPZ2410**
	2 500	9,7	8	**PHG SPZ2500**
	2 540	9,7	8	**PHG SPZ2540**
	2 580	9,7	8	**PHG SPZ2580**
	2 650	9,7	8	**PHG SPZ2650**
	2 690	9,7	8	**PHG SPZ2690**
	2 800	9,7	8	**PHG SPZ2800**
	2 840	9,7	8	**PHG SPZ2840**
	2 900	9,7	8	**PHG SPZ2900**
	3 000	9,7	8	**PHG SPZ3000**
	3 150	9,7	8	**PHG SPZ3150**
	3 170	9,7	8	**PHG SPZ3170**
	3 350	9,7	8	**PHG SPZ3350**
	3 550	9,7	8	**PHG SPZ3550**
SPA	732	12,7	10	**PHG SPA732**
	757	12,7	10	**PHG SPA757**
	775	12,7	10	**PHG SPA775**
	782	12,7	10	**PHG SPA782**
	800	12,7	10	**PHG SPA800**
	807	12,7	10	**PHG SPA807**
	832	12,7	10	**PHG SPA832**
	850	12,7	10	**PHG SPA850**
	857	12,7	10	**PHG SPA857**
	882	12,7	10	**PHG SPA882**
	900	12,7	10	**PHG SPA900**
	907	12,7	10	**PHG SPA907**
	925	12,7	10	**PHG SPA925**
	932	12,7	10	**PHG SPA932**
	950	12,7	10	**PHG SPA950**
	957	12,7	10	**PHG SPA957**
	969	12,7	10	**PHG SPA969**
	975	12,7	10	**PHG SPA975**
	982	12,7	10	**PHG SPA982**
	1 000	12,7	10	**PHG SPA1000**
	1 007	12,7	10	**PHG SPA1007**
	1 030	12,7	10	**PHG SPA1030**
	1 032	12,7	10	**PHG SPA1032**
	1 055	12,7	10	**PHG SPA1055**
	1 060	12,7	10	**PHG SPA1060**
	1 082	12,7	10	**PHG SPA1082**
	1 090	12,7	10	**PHG SPA1090**
	1 107	12,7	10	**PHG SPA1107**
	1 120	12,7	10	**PHG SPA1120**
	1 132	12,7	10	**PHG SPA1132**
	1 150	12,7	10	**PHG SPA1150**
	1 157	12,7	10	**PHG SPA1157**
	1 180	12,7	10	**PHG SPA1180**
	1 190	12,7	10	**PHG SPA1190**
	1 200	12,7	10	**PHG SPA1200**
	1 207	12,7	10	**PHG SPA1207**
	1 220	12,7	10	**PHG SPA1220**
	1 232	12,7	10	**PHG SPA1232**
	1 250	12,7	10	**PHG SPA1250**
	1 257	12,7	10	**PHG SPA1257**

Non-standard lengths are also available.

Section	Dimensions Pitch length	w	h	Designation
–	mm			–
SPA	1 272	12,7	10	PHG SPA1272
	1 282	12,7	10	PHG SPA1282
	1 300	12,7	10	PHG SPA1300
	1 307	12,7	10	PHG SPA1307
	1 320	12,7	10	PHG SPA1320
	1 332	12,7	10	PHG SPA1332
	1 357	12,7	10	PHG SPA1357
	1 360	12,7	10	PHG SPA1360
	1 367	12,7	10	PHG SPA1367
	1 382	12,7	10	PHG SPA1382
	1 400	12,7	10	PHG SPA1400
	1 407	12,7	10	PHG SPA1407
	1 415	12,7	10	PHG SPA1415
	1 420	12,7	10	PHG SPA1420
	1 432	12,7	10	PHG SPA1432
	1 450	12,7	10	PHG SPA1450
	1 457	12,7	10	PHG SPA1457
	1 482	12,7	10	PHG SPA1482
	1 490	12,7	10	PHG SPA1490
	1 500	12,7	10	PHG SPA1500
	1 507	12,7	10	PHG SPA1507
	1 532	12,7	10	PHG SPA1532
	1 550	12,7	10	PHG SPA1550
	1 557	12,7	10	PHG SPA1557
	1 582	12,7	10	PHG SPA1582
	1 600	12,7	10	PHG SPA1600
	1 607	12,7	10	PHG SPA1607
	1 632	12,7	10	PHG SPA1632
	1 650	12,7	10	PHG SPA1650
	1 657	12,7	10	PHG SPA1657
	1 682	12,7	10	PHG SPA1682
	1 700	12,7	10	PHG SPA1700
	1 707	12,7	10	PHG SPA1707
	1 732	12,7	10	PHG SPA1732
	1 750	12,7	10	PHG SPA1750
	1 757	12,7	10	PHG SPA1757
	1 782	12,7	10	PHG SPA1782
	1 800	12,7	10	PHG SPA1800
	1 807	12,7	10	PHG SPA1807
	1 820	12,7	10	PHG SPA1820
	1 832	12,7	10	PHG SPA1832
	1 850	12,7	10	PHG SPA1850
	1 857	12,7	10	PHG SPA1857
	1 882	12,7	10	PHG SPA1882
	1 900	12,7	10	PHG SPA1900
	1 907	12,7	10	PHG SPA1907
	1 932	12,7	10	PHG SPA1932
	1 950	12,7	10	PHG SPA1950
	1 957	12,7	10	PHG SPA1957
	1 982	12,7	10	PHG SPA1982
	2 000	12,7	10	PHG SPA2000
	2 032	12,7	10	PHG SPA2032
	2 057	12,7	10	PHG SPA2057
	2 060	12,7	10	PHG SPA2060
	2 082	12,7	10	PHG SPA2082
	2 120	12,7	10	PHG SPA2120
	2 132	12,7	10	PHG SPA2132
	2 160	12,7	10	PHG SPA2160
	2 182	12,7	10	PHG SPA2182
	2 207	12,7	10	PHG SPA2207
	2 232	12,7	10	PHG SPA2232
	2 240	12,7	10	PHG SPA2240
	2 282	12,7	10	PHG SPA2282
	2 300	12,7	10	PHG SPA2300
	2 307	12,7	10	PHG SPA2307
	2 332	12,7	10	PHG SPA2332
	2 360	12,7	10	PHG SPA2360
	2 382	12,7	10	PHG SPA2382
	2 430	12,7	10	PHG SPA2430
	2 432	12,7	10	PHG SPA2432
	2 482	12,7	10	PHG SPA2482
	2 500	12,7	10	PHG SPA2500
	2 532	12,7	10	PHG SPA2532
	2 582	12,7	10	PHG SPA2582
	2 607	12,7	10	PHG SPA2607
	2 632	12,7	10	PHG SPA2632

Section	Dimensions Pitch length	w	h	Designation
–	mm			–
SPA	2 650	12,7	10	PHG SPA2650
	2 682	12,7	10	PHG SPA2682
	2 732	12,7	10	PHG SPA2732
	2 782	12,7	10	PHG SPA2782
	2 800	12,7	10	PHG SPA2800
	2 832	12,7	10	PHG SPA2832
	2 847	12,7	10	PHG SPA2847
	2 882	12,7	10	PHG SPA2882
	2 900	12,7	10	PHG SPA2900
	2 932	12,7	10	PHG SPA2932
	2 982	12,7	10	PHG SPA2982
	3 000	12,7	10	PHG SPA3000
	3 032	12,7	10	PHG SPA3032
	3 082	12,7	10	PHG SPA3082
	3 150	12,7	10	PHG SPA3150
	3 182	12,7	10	PHG SPA3182
	3 282	12,7	10	PHG SPA3282
	3 350	12,7	10	PHG SPA3350
	3 382	12,7	10	PHG SPA3382
	3 550	12,7	10	PHG SPA3550
	3 750	12,7	10	PHG SPA3750
	4 000	12,7	10	PHG SPA4000
	4 250	12,7	10	PHG SPA4250
	4 500	12,7	10	PHG SPA4500
SPB	1 250	16,3	13	PHG SPB1250
	1 260	16,3	13	PHG SPB1260
	1 270	16,3	13	PHG SPB1270
	1 280	16,3	13	PHG SPB1280
	1 320	16,3	13	PHG SPB1320
	1 340	16,3	13	PHG SPB1340
	1 400	16,3	13	PHG SPB1400
	1 410	16,3	13	PHG SPB1410
	1 450	16,3	13	PHG SPB1450
	1 465	16,3	13	PHG SPB1465
	1 500	16,3	13	PHG SPB1500
	1 510	16,3	13	PHG SPB1510
	1 525	16,3	13	PHG SPB1525
	1 590	16,3	13	PHG SPB1590
	1 600	16,3	13	PHG SPB1600
	1 650	16,3	13	PHG SPB1650
	1 690	16,3	13	PHG SPB1690
	1 700	16,3	13	PHG SPB1700
	1 720	16,3	13	PHG SPB1720
	1 750	16,3	13	PHG SPB1750
	1 800	16,3	13	PHG SPB1800
	1 850	16,3	13	PHG SPB1850
	1 900	16,3	13	PHG SPB1900
	2 000	16,3	13	PHG SPB2000
	2 020	16,3	13	PHG SPB2020
	2 060	16,3	13	PHG SPB2060
	2 120	16,3	13	PHG SPB2120
	2 150	16,3	13	PHG SPB2150
	2 180	16,3	13	PHG SPB2180
	2 240	16,3	13	PHG SPB2240
	2 280	16,3	13	PHG SPB2280
	2 360	16,3	13	PHG SPB2360
	2 410	16,3	13	PHG SPB2410
	2 430	16,3	13	PHG SPB2430
	2 500	16,3	13	PHG SPB2500
	2 530	16,3	13	PHG SPB2530
	2 580	16,3	13	PHG SPB2580
	2 600	16,3	13	PHG SPB2600
	2 650	16,3	13	PHG SPB2650
	2 680	16,3	13	PHG SPB2680
	2 700	16,3	13	PHG SPB2700
	2 800	16,3	13	PHG SPB2800
	2 840	16,3	13	PHG SPB2840
	2 900	16,3	13	PHG SPB2900
	2 990	16,3	13	PHG SPB2990
	3 000	16,3	13	PHG SPB3000
	3 070	16,3	13	PHG SPB3070
	3 150	16,3	13	PHG SPB3150
	3 250	16,3	13	PHG SPB3250
	3 350	16,3	13	PHG SPB3350
	3 450	16,3	13	PHG SPB3450
	3 550	16,3	13	PHG SPB3550

Section	Dimensions Pitch length	w	h	Designation
–	mm			–
SPB	3 650	16,3	13	PHG SPB3650
	3 750	16,3	13	PHG SPB3750
	3 800	16,3	13	PHG SPB3800
	3 870	16,3	13	PHG SPB3870
	4 000	16,3	13	PHG SPB4000
	4 060	16,3	13	PHG SPB4060
	4 120	16,3	13	PHG SPB4120
	4 250	16,3	13	PHG SPB4250
	4 310	16,3	13	PHG SPB4310
	4 500	16,3	13	PHG SPB4500
	4 560	16,3	13	PHG SPB4560
	4 620	16,3	13	PHG SPB4620
	4 750	16,3	13	PHG SPB4750
	4 820	16,3	13	PHG SPB4820
	5 000	16,3	13	PHG SPB5000
	5 070	16,3	13	PHG SPB5070
	5 300	16,3	13	PHG SPB5300
	5 380	16,3	13	PHG SPB5380
	5 500	16,3	13	PHG SPB5500
	5 600	16,3	13	PHG SPB5600
	5 680	16,3	13	PHG SPB5680
	6 000	16,3	13	PHG SPB6000
	6 300	16,3	13	PHG SPB6300
	6 340	16,3	13	PHG SPB6340
	6 700	16,3	13	PHG SPB6700
	7 100	16,3	13	PHG SPB7100
	7 500	16,3	13	PHG SPB7500
	8 000	16,3	13	PHG SPB8000
SPC	1 700	22,0	18	PHG SPC1700
	2 000	22,0	18	PHG SPC2000
	2 120	22,0	18	PHG SPC2120
	2 240	22,0	18	PHG SPC2240
	2 360	22,0	18	PHG SPC2360
	2 500	22,0	18	PHG SPC2500
	2 650	22,0	18	PHG SPC2650
	2 800	22,0	18	PHG SPC2800
	3 000	22,0	18	PHG SPC3000
	3 150	22,0	18	PHG SPC3150
	3 350	22,0	18	PHG SPC3350
	3 550	22,0	18	PHG SPC3550
	3 750	22,0	18	PHG SPC3750
	4 000	22,0	18	PHG SPC4000
	4 250	22,0	18	PHG SPC4250
	4 500	22,0	18	PHG SPC4500
	4 750	22,0	18	PHG SPC4750
	5 000	22,0	18	PHG SPC5000
	5 300	22,0	18	PHG SPC5300
	5 600	22,0	18	PHG SPC5600
	6 000	22,0	18	PHG SPC6000
	6 300	22,0	18	PHG SPC6300
	6 700	22,0	18	PHG SPC6700
	7 100	22,0	18	PHG SPC7100
	7 500	22,0	18	PHG SPC7500
	8 000	22,0	18	PHG SPC8000
	8 500	22,0	18	PHG SPC8500
	9 000	22,0	18	PHG SPC9000
	9 500	22,0	18	PHG SPC9500
	10 000	22,0	18	PHG SPC10000
	10 600	22,0	18	PHG SPC10600
	11 200	22,0	18	PHG SPC11200
	11 800	22,0	18	PHG SPC11800
	12 500	22,0	18	PHG SPC12500

Non-standard lengths are also available.

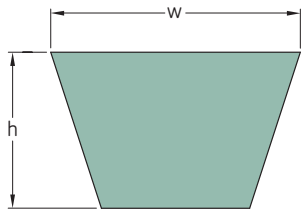

Section	Dimensions Pitch length	Inside length		w	h	Designation
–	mm		in.	mm		–
10/Z	395	381	15,00	10	6	**PHG Z15**
	420	406	16,00	10	6	**PHG Z16**
	445	432	17,00	10	6	**PHG Z17**
	470	457	18,00	10	6	**PHG Z18**
	495	483	19,00	10	6	**PHG Z19**
	520	508	20,00	10	6	**PHG Z20**
	545	533	21,00	10	6	**PHG Z21**
	570	559	22,00	10	6	**PHG Z22**
	600	584	23,00	10	6	**PHG Z23**
	620	610	24,00	10	6	**PHG Z24**
	650	635	25,00	10	6	**PHG Z25**
	680	660	26,00	10	6	**PHG Z26**
	700	686	27,00	10	6	**PHG Z27**
	725	711	28,00	10	6	**PHG Z28**
	750	737	29,00	10	6	**PHG Z29**
	780	762	30,00	10	6	**PHG Z30**
	800	787	31,00	10	6	**PHG Z31**
	840	813	32,00	10	6	**PHG Z32**
	850	838	33,00	10	6	**PHG Z33**
	875	864	34,00	10	6	**PHG Z34**
	900	889	35,00	10	6	**PHG Z35**
	930	914	36,00	10	6	**PHG Z36**
	950	940	37,00	10	6	**PHG Z37**
	980	965	38,00	10	6	**PHG Z38**
	1 015	991	39,00	10	6	**PHG Z39**
	1 035	1 016	40,00	10	6	**PHG Z40**
	1 055	1 041	41,00	10	6	**PHG Z41**
	1 080	1 067	42,00	10	6	**PHG Z42**
	1 105	1 092	43,00	10	6	**PHG Z43**
	1 130	1 118	44,00	10	6	**PHG Z44**
	1 155	1 143	45,00	10	6	**PHG Z45**
	1 190	1 168	46,00	10	6	**PHG Z46**
	1 205	1 194	47,00	10	6	**PHG Z47**
	1 240	1 219	48,00	10	6	**PHG Z48**
	1 270	1 245	49,00	10	6	**PHG Z49**
	1 290	1 270	50,00	10	6	**PHG Z50**
	1 330	1 295	51,00	10	6	**PHG Z51**
	1 340	1 321	52,00	10	6	**PHG Z52**
	1 380	1 346	53,00	10	6	**PHG Z53**
	1 390	1 372	54,00	10	6	**PHG Z54**
	1 420	1 397	55,00	10	6	**PHG Z55**
	1 440	1 422	56,00	10	6	**PHG Z56**
	1 465	1 448	57,00	10	6	**PHG Z57**
	1 515	1 499	59,00	10	6	**PHG Z59**
	1 540	1 524	60,00	10	6	**PHG Z60**
	1 570	1 549	61,00	10	6	**PHG Z61**
	1 595	1 575	62,00	10	6	**PHG Z62**
	1 620	1 600	63,00	10	6	**PHG Z63**
	1 645	1 626	64,00	10	6	**PHG Z64**
	1 670	1 651	65,00	10	6	**PHG Z65**
	1 695	1 676	66,00	10	6	**PHG Z66**
	1 720	1 702	67,00	10	6	**PHG Z67**
	1 750	1 727	68,00	10	6	**PHG Z68**
	1 770	1 753	69,00	10	6	**PHG Z69**
	1 820	1 803	71,00	10	6	**PHG Z71**

Section	Dimensions Pitch length	Inside length		w	h	Designation
–	mm		in.	mm		–
10/Z	1 930	1 905	75,00	10	6	**PHG Z75**
	2 000	1 981	78,00	10	6	**PHG Z78**
	2 025	2 007	79,00	10	6	**PHG Z79**
13/A	436	406	16,00	13	8	**PHG A16**
	487	457	18,00	13	8	**PHG A18**
	510	483	19,00	13	8	**PHG A19**
	540	508	20,00	13	8	**PHG A20**
	570	533	21,00	13	8	**PHG A21**
	590	559	22,00	13	8	**PHG A22**
	620	584	23,00	13	8	**PHG A23**
	640	610	24,00	13	8	**PHG A24**
	670	635	25,00	13	8	**PHG A25**
	700	660	26,00	13	8	**PHG A26**
	720	686	27,00	13	8	**PHG A27**
	740	711	28,00	13	8	**PHG A28**
	770	737	29,00	13	8	**PHG A29**
	790	762	30,00	13	8	**PHG A30**
	817	787	31,00	13	8	**PHG A31**
	850	813	32,00	13	8	**PHG A32**
	870	838	33,00	13	8	**PHG A33**
	890	864	34,00	13	8	**PHG A34**
	920	889	35,00	13	8	**PHG A35**
	950	914	36,00	13	8	**PHG A36**
	970	940	37,00	13	8	**PHG A37**
	990	965	38,00	13	8	**PHG A38**
	1 020	991	39,00	13	8	**PHG A39**
	1 050	1 016	40,00	13	8	**PHG A40**
	1 070	1 041	41,00	13	8	**PHG A41**
	1 100	1 067	42,00	13	8	**PHG A42**
	1 130	1 092	43,00	13	8	**PHG A43**
	1 150	1 118	44,00	13	8	**PHG A44**
	1 180	1 143	45,00	13	8	**PHG A45**
	1 200	1 168	46,00	13	8	**PHG A46**
	1 230	1 194	47,00	13	8	**PHG A47**
	1 250	1 219	48,00	13	8	**PHG A48**
	1 280	1 245	49,00	13	8	**PHG A49**
	1 300	1 270	50,00	13	8	**PHG A50**
	1 330	1 295	51,00	13	8	**PHG A51**
	1 360	1 321	52,00	13	8	**PHG A52**
	1 380	1 346	53,00	13	8	**PHG A53**
	1 410	1 372	54,00	13	8	**PHG A54**
	1 430	1 397	55,00	13	8	**PHG A55**
	1 460	1 422	56,00	13	8	**PHG A56**
	1 480	1 448	57,00	13	8	**PHG A57**
	1 510	1 473	58,00	13	8	**PHG A58**
	1 530	1 499	59,00	13	8	**PHG A59**
	1 550	1 524	60,00	13	8	**PHG A60**
	1 580	1 549	61,00	13	8	**PHG A61**
	1 610	1 575	62,00	13	8	**PHG A62**
	1 640	1 600	63,00	13	8	**PHG A63**
	1 660	1 626	64,00	13	8	**PHG A64**
	1 690	1 651	65,00	13	8	**PHG A65**
	1 710	1 676	66,00	13	8	**PHG A66**
	1 740	1 702	67,00	13	8	**PHG A67**

Non-standard lengths are also available.

Section	Dimensions Pitch length	Inside length		w	h	Designation
–	mm		in.	mm		–
13/A	1 760	1 727	68,00	13	8	**PHG A68**
	1 790	1 753	69,00	13	8	**PHG A69**
	1 810	1 778	70,00	13	8	**PHG A70**
	1 840	1 803	71,00	13	8	**PHG A71**
	1 860	1 829	72,00	13	8	**PHG A72**
	1 890	1 854	73,00	13	8	**PHG A73**
	1 920	1 880	74,00	13	8	**PHG A74**
	1 940	1 905	75,00	13	8	**PHG A75**
	1 960	1 930	76,00	13	8	**PHG A76**
	1 990	1 956	77,00	13	8	**PHG A77**
	2 020	1 981	78,00	13	8	**PHG A78**
	2 050	2 007	79,00	13	8	**PHG A79**
	2 070	2 032	80,00	13	8	**PHG A80**
	2 090	2 057	81,00	13	8	**PHG A81**
	2 120	2 083	82,00	13	8	**PHG A82**
	2 140	2 108	83,00	13	8	**PHG A83**
	2 170	2 134	84,00	13	8	**PHG A84**
	2 200	2 159	85,00	13	8	**PHG A85**
	2 220	2 184	86,00	13	8	**PHG A86**
	2 240	2 210	87,00	13	8	**PHG A87**
	2 270	2 235	88,00	13	8	**PHG A88**
	2 300	2 261	89,00	13	8	**PHG A89**
	2 320	2 286	90,00	13	8	**PHG A90**
	2 350	2 311	91,00	13	8	**PHG A91**
	2 370	2 337	92,00	13	8	**PHG A92**
	2 400	2 362	93,00	13	8	**PHG A93**
	2 420	2 388	94,00	13	8	**PHG A94**
	2 450	2 413	95,00	13	8	**PHG A95**
	2 480	2 438	96,00	13	8	**PHG A96**
	2 500	2 464	97,00	13	8	**PHG A97**
	2 520	2 489	98,00	13	8	**PHG A98**
	2 550	2 515	99,00	13	8	**PHG A99**
	2 570	2 540	100,00	13	8	**PHG A100**
	2 630	2 591	102,00	13	8	**PHG A102**
	2 680	2 642	104,00	13	8	**PHG A104**
	2 700	2 667	105,00	13	8	**PHG A105**
	2 750	2 718	107,00	13	8	**PHG A107**
	2 780	2 743	108,00	13	8	**PHG A108**
	2 830	2 794	110,00	13	8	**PHG A110**
	2 880	2 845	112,00	13	8	**PHG A112**
	2 930	2 896	114,00	13	8	**PHG A114**
	2 980	2 946	116,00	13	8	**PHG A116**
	3 030	2 997	118,00	13	8	**PHG A118**
	3 080	3 048	120,00	13	8	**PHG A120**
	3 190	3 150	124,00	13	8	**PHG A124**
	3 290	3 251	128,00	13	8	**PHG A128**
	3 340	3 302	130,00	13	8	**PHG A130**
	3 390	3 353	132,00	13	8	**PHG A132**
	3 490	3 454	136,00	13	8	**PHG A136**
	3 590	3 556	140,00	13	8	**PHG A140**
	3 690	3 658	144,00	13	8	**PHG A144**
	3 800	3 759	148,00	13	8	**PHG A148**
	3 840	3 810	150,00	13	8	**PHG A150**
	4 043	4 013	158,00	13	8	**PHG A158**
	4 424	4 394	173,00	13	8	**PHG A173**
	4 780	4 750	187,00	13	8	**PHG A187**
17/B	624	584	23,00	17	11	**PHG B23**
	650	610	24,00	17	11	**PHG B24**
	675	635	25,00	17	11	**PHG B25**
	700	660	26,00	17	11	**PHG B26**
	730	686	27,00	17	11	**PHG B27**
	750	711	28,00	17	11	**PHG B28**
	770	737	29,00	17	11	**PHG B29**
	800	762	30,00	17	11	**PHG B30**
	830	787	31,00	17	11	**PHG B31**
	860	813	32,00	17	11	**PHG B32**
	880	838	33,00	17	11	**PHG B33**
	910	864	34,00	17	11	**PHG B34**
	930	889	35,00	17	11	**PHG B35**
	960	914	36,00	17	11	**PHG B36**
	980	940	37,00	17	11	**PHG B37**
	1 000	965	38,00	17	11	**PHG B38**
	1 030	991	39,00	17	11	**PHG B39**
	1 060	1 016	40,00	17	11	**PHG B40**
	1 080	1 041	41,00	17	11	**PHG B41**
	1 100	1 067	42,00	17	11	**PHG B42**

Section	Dimensions Pitch length	Inside length		w	h	Designation
–	mm		in.	mm		–
17/B	1 130	1 092	43,00	17	11	**PHG B43**
	1 160	1 118	44,00	17	11	**PHG B44**
	1 180	1 143	45,00	17	11	**PHG B45**
	1 210	1 168	46,00	17	11	**PHG B46**
	1 240	1 194	47,00	17	11	**PHG B47**
	1 260	1 219	48,00	17	11	**PHG B48**
	1 290	1 245	49,00	17	11	**PHG B49**
	1 310	1 270	50,00	17	11	**PHG B50**
	1 340	1 295	51,00	17	11	**PHG B51**
	1 370	1 321	52,00	17	11	**PHG B52**
	1 390	1 346	53,00	17	11	**PHG B53**
	1 410	1 372	54,00	17	11	**PHG B54**
	1 440	1 397	55,00	17	11	**PHG B55**
	1 460	1 422	56,00	17	11	**PHG B56**
	1 490	1 448	57,00	17	11	**PHG B57**
	1 510	1 473	58,00	17	11	**PHG B58**
	1 540	1 499	59,00	17	11	**PHG B59**
	1 560	1 524	60,00	17	11	**PHG B60**
	1 590	1 549	61,00	17	11	**PHG B61**
	1 620	1 575	62,00	17	11	**PHG B62**
	1 640	1 600	63,00	17	11	**PHG B63**
	1 670	1 626	64,00	17	11	**PHG B64**
	1 690	1 651	65,00	17	11	**PHG B65**
	1 720	1 676	66,00	17	11	**PHG B66**
	1 740	1 702	67,00	17	11	**PHG B67**
	1 760	1 727	68,00	17	11	**PHG B68**
	1 800	1 753	69,00	17	11	**PHG B69**
	1 820	1 778	70,00	17	11	**PHG B70**
	1 850	1 803	71,00	17	11	**PHG B71**
	1 870	1 829	72,00	17	11	**PHG B72**
	1 900	1 854	73,00	17	11	**PHG B73**
	1 920	1 880	74,00	17	11	**PHG B74**
	1 950	1 905	75,00	17	11	**PHG B75**
	1 970	1 930	76,00	17	11	**PHG B76**
	2 000	1 956	77,00	17	11	**PHG B77**
	2 020	1 981	78,00	17	11	**PHG B78**
	2 050	2 007	79,00	17	11	**PHG B79**
	2 070	2 032	80,00	17	11	**PHG B80**
	2 100	2 057	81,00	17	11	**PHG B81**
	2 130	2 083	82,00	17	11	**PHG B82**
	2 150	2 108	83,00	17	11	**PHG B83**
	2 180	2 134	84,00	17	11	**PHG B84**
	2 200	2 159	85,00	17	11	**PHG B85**
	2 230	2 184	86,00	17	11	**PHG B86**
	2 250	2 210	87,00	17	11	**PHG B87**
	2 280	2 235	88,00	17	11	**PHG B88**
	2 300	2 261	89,00	17	11	**PHG B89**
	2 330	2 286	90,00	17	11	**PHG B90**
	2 350	2 311	91,00	17	11	**PHG B91**
	2 380	2 337	92,00	17	11	**PHG B92**
	2 400	2 362	93,00	17	11	**PHG B93**
	2 420	2 388	94,00	17	11	**PHG B94**
	2 450	2 413	95,00	17	11	**PHG B95**
	2 480	2 438	96,00	17	11	**PHG B96**
	2 500	2 464	97,00	17	11	**PHG B97**
	2 530	2 489	98,00	17	11	**PHG B98**
	2 560	2 515	99,00	17	11	**PHG B99**
	2 580	2 540	100,00	17	11	**PHG B100**
	2 610	2 565	101,00	17	11	**PHG B101**
	2 630	2 591	102,00	17	11	**PHG B102**
	2 660	2 616	103,00	17	11	**PHG B103**
	2 680	2 642	104,00	17	11	**PHG B104**
	2 700	2 667	105,00	17	11	**PHG B105**
	2 740	2 692	106,00	17	11	**PHG B106**
	2 760	2 718	107,00	17	11	**PHG B107**
	2 790	2 743	108,00	17	11	**PHG B108**
	2 840	2 794	110,00	17	11	**PHG B110**
	2 890	2 845	112,00	17	11	**PHG B112**
	2 940	2 896	114,00	17	11	**PHG B114**
	2 960	2 921	115,00	17	11	**PHG B115**
	2 990	2 946	116,00	17	11	**PHG B116**
	3 040	2 997	118,00	17	11	**PHG B118**
	3 090	3 048	120,00	17	11	**PHG B120**
	3 140	3 099	122,00	17	11	**PHG B122**
	3 200	3 150	124,00	17	11	**PHG B124**
	3 240	3 200	126,00	17	11	**PHG B126**

Non-standard lengths are also available.

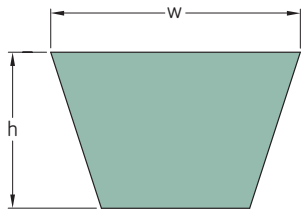

Section	Dimensions Pitch length	Inside length		w	h	Designation
–	mm		in.	mm		–
17/B	3 290	3 251	128,00	17	11	**PHG B128**
	3 350	3 302	130,00	17	11	**PHG B130**
	3 400	3 353	132,00	17	11	**PHG B132**
	3 450	3 404	134,00	17	11	**PHG B134**
	3 500	3 454	136,00	17	11	**PHG B136**
	3 550	3 505	138,00	17	11	**PHG B138**
	3 600	3 556	140,00	17	11	**PHG B140**
	3 650	3 607	142,00	17	11	**PHG B142**
	3 700	3 658	144,00	17	11	**PHG B144**
	3 750	3 708	146,00	17	11	**PHG B146**
	3 800	3 759	148,00	17	11	**PHG B148**
	3 850	3 810	150,00	17	11	**PHG B150**
	3 870	3 835	151,00	17	11	**PHG B151**
	3 900	3 861	152,00	17	11	**PHG B152**
	3 950	3 912	154,00	17	11	**PHG B154**
	4 010	3 962	156,00	17	11	**PHG B156**
	4 060	4 013	158,00	17	11	**PHG B158**
	4 110	4 064	160,00	17	11	**PHG B160**
	4 160	4 115	162,00	17	11	**PHG B162**
	4 200	4 166	164,00	17	11	**PHG B164**
	4 230	4 191	165,00	17	11	**PHG B165**
	4 280	4 242	167,00	17	11	**PHG B167**
	4 360	4 318	170,00	17	11	**PHG B170**
	4 430	4 394	173,00	17	11	**PHG B173**
	4 490	4 445	175,00	17	11	**PHG B175**
	4 540	4 496	177,00	17	11	**PHG B177**
	4 610	4 572	180,00	17	11	**PHG B180**
	4 740	4 699	185,00	17	11	**PHG B185**
	4 800	4 750	187,00	17	11	**PHG B187**
	5 000	4 953	195,00	17	11	**PHG B195**
	5 044	5 004	197,00	17	11	**PHG B197**
	5 220	5 182	204,00	17	11	**PHG B204**
	5 340	5 283	208,00	17	11	**PHG B208**
	5 370	5 334	210,00	17	11	**PHG B210**
	5 630	5 588	220,00	17	11	**PHG B220**
	5 760	5 715	225,00	17	11	**PHG B225**
	6 040	5 994	236,00	17	11	**PHG B236**
	6 140	6 096	240,00	17	11	**PHG B240**
	6 340	6 299	248,00	17	11	**PHG B248**
	6 750	6 706	264,00	17	11	**PHG B264**
	6 900	6 858	270,00	17	11	**PHG B270**
	7 025	6 985	275,00	17	11	**PHG B275**
	7 050	7 010	276,00	17	11	**PHG B276**
	7 150	7 112	280,00	17	11	**PHG B280**
	7 660	7 620	300,00	17	11	**PHG B300**
	8 040	8 001	315,00	17	11	**PHG B315**
22/C	1 126	1 067	42,00	22	14	**PHG C42**
	1 150	1 092	43,00	22	14	**PHG C43**
	1 250	1 194	47,00	22	14	**PHG C47**
	1 280	1 219	48,00	22	14	**PHG C48**
	1 300	1 245	49,00	22	14	**PHG C49**
	1 325	1 270	50,00	22	14	**PHG C50**
	1 350	1 295	51,00	22	14	**PHG C51**
	1 370	1 321	52,00	22	14	**PHG C52**

Section	Dimensions Pitch length	Inside length		w	h	Designation
–	mm		in.	mm		–
22/C	1 400	1 346	53,00	22	14	**PHG C53**
	1 430	1 372	54,00	22	14	**PHG C54**
	1 450	1 397	55,00	22	14	**PHG C55**
	1 480	1 422	56,00	22	14	**PHG C56**
	1 500	1 448	57,00	22	14	**PHG C57**
	1 530	1 473	58,00	22	14	**PHG C58**
	1 560	1 499	59,00	22	14	**PHG C59**
	1 580	1 524	60,00	22	14	**PHG C60**
	1 610	1 549	61,00	22	14	**PHG C61**
	1 630	1 575	62,00	22	14	**PHG C62**
	1 650	1 600	63,00	22	14	**PHG C63**
	1 700	1 651	65,00	22	14	**PHG C65**
	1 730	1 676	66,00	22	14	**PHG C66**
	1 760	1 702	67,00	22	14	**PHG C67**
	1 780	1 727	68,00	22	14	**PHG C68**
	1 810	1 753	69,00	22	14	**PHG C69**
	1 830	1 778	70,00	22	14	**PHG C70**
	1 860	1 803	71,00	22	14	**PHG C71**
	1 880	1 829	72,00	22	14	**PHG C72**
	1 910	1 854	73,00	22	14	**PHG C73**
	1 930	1 880	74,00	22	14	**PHG C74**
	1 950	1 905	75,00	22	14	**PHG C75**
	1 990	1 930	76,00	22	14	**PHG C76**
	2 010	1 956	77,00	22	14	**PHG C77**
	2 040	1 981	78,00	22	14	**PHG C78**
	2 060	2 007	79,00	22	14	**PHG C79**
	2 090	2 032	80,00	22	14	**PHG C80**
	2 110	2 057	81,00	22	14	**PHG C81**
	2 140	2 083	82,00	22	14	**PHG C82**
	2 160	2 108	83,00	22	14	**PHG C83**
	2 190	2 134	84,00	22	14	**PHG C84**
	2 220	2 159	85,00	22	14	**PHG C85**
	2 240	2 184	86,00	22	14	**PHG C86**
	2 270	2 210	87,00	22	14	**PHG C87**
	2 290	2 235	88,00	22	14	**PHG C88**
	2 320	2 261	89,00	22	14	**PHG C89**
	2 340	2 286	90,00	22	14	**PHG C90**
	2 390	2 337	92,00	22	14	**PHG C92**
	2 420	2 362	93,00	22	14	**PHG C93**
	2 440	2 388	94,00	22	14	**PHG C94**
	2 470	2 413	95,00	22	14	**PHG C95**
	2 490	2 438	96,00	22	14	**PHG C96**
	2 520	2 464	97,00	22	14	**PHG C97**
	2 550	2 489	98,00	22	14	**PHG C98**
	2 570	2 515	99,00	22	14	**PHG C99**
	2 600	2 540	100,00	22	14	**PHG C100**
	2 620	2 565	101,00	22	14	**PHG C101**
	2 650	2 591	102,00	22	14	**PHG C102**
	2 700	2 642	104,00	22	14	**PHG C104**
	2 720	2 667	105,00	22	14	**PHG C105**
	2 740	2 692	106,00	22	14	**PHG C106**
	2 800	2 743	108,00	22	14	**PHG C108**
	2 850	2 794	110,00	22	14	**PHG C110**
	2 900	2 845	112,00	22	14	**PHG C112**
	2 950	2 896	114,00	22	14	**PHG C114**

Non-standard lengths are also available.

Section	Dimensions Pitch length	Inside length		w	h	Designation
–	mm		in.	mm		–
22/C	2 980	2 921	115,00	22	14	**PHG C115**
	3 000	2 946	116,00	22	14	**PHG C116**
	3 050	2 997	118,00	22	14	**PHG C118**
	3 100	3 048	120,00	22	14	**PHG C120**
	3 160	3 099	122,00	22	14	**PHG C122**
	3 210	3 150	124,00	22	14	**PHG C124**
	3 270	3 200	126,00	22	14	**PHG C126**
	3 310	3 251	128,00	22	14	**PHG C128**
	3 360	3 302	130,00	22	14	**PHG C130**
	3 410	3 353	132,00	22	14	**PHG C132**
	3 460	3 404	134,00	22	14	**PHG C134**
	3 520	3 454	136,00	22	14	**PHG C136**
	3 560	3 505	138,00	22	14	**PHG C138**
	3 610	3 556	140,00	22	14	**PHG C140**
	3 660	3 607	142,00	22	14	**PHG C142**
	3 710	3 658	144,00	22	14	**PHG C144**
	3 760	3 708	146,00	22	14	**PHG C146**
	3 820	3 759	148,00	22	14	**PHG C148**
	3 870	3 810	150,00	22	14	**PHG C150**
	3 920	3 861	152,00	22	14	**PHG C152**
	4 060	4 013	158,00	22	14	**PHG C158**
	4 170	4 115	162,00	22	14	**PHG C162**
	4 280	4 216	166,00	22	14	**PHG C166**
	4 300	4 242	167,00	22	14	**PHG C167**
	4 320	4 267	168,00	22	14	**PHG C168**
	4 450	4 394	173,00	22	14	**PHG C173**
	4 500	4 445	175,00	22	14	**PHG C175**
	4 560	4 496	177,00	22	14	**PHG C177**
	4 630	4 572	180,00	22	14	**PHG C180**
	4 810	4 750	187,00	22	14	**PHG C187**
	4 880	4 826	190,00	22	14	**PHG C190**
	5 010	4 953	195,00	22	14	**PHG C195**
	5 060	5 004	197,00	22	14	**PHG C197**
	5 240	5 182	204,00	22	14	**PHG C204**
	5 340	5 283	208,00	22	14	**PHG C208**
	5 380	5 334	210,00	22	14	**PHG C210**
	5 640	5 588	220,00	22	14	**PHG C220**
	5 770	5 715	225,00	22	14	**PHG C225**
	6 050	5 994	236,00	22	14	**PHG C236**
	6 100	6 045	238,00	22	14	**PHG C238**
	6 150	6 096	240,00	22	14	**PHG C240**
	6 360	6 299	248,00	22	14	**PHG C248**
	6 535	6 477	255,00	22	14	**PHG C255**
	6 760	6 706	264,00	22	14	**PHG C264**
	6 910	6 858	270,00	22	14	**PHG C270**
	7 170	7 112	280,00	22	14	**PHG C280**
	7 550	7 493	295,00	22	14	**PHG C295**
	7 680	7 620	300,00	22	14	**PHG C300**
	8 060	8 001	315,00	22	14	**PHG C315**
	8 390	8 331	328,00	22	14	**PHG C328**
	8 440	8 382	330,00	22	14	**PHG C330**
	9 200	9 144	360,00	22	14	**PHG C360**
	9 970	9 906	390,00	22	14	**PHG C390**
	10 670	10 617	418,00	22	14	**PHG C418**
32/D	2 560	2 489	98,00	32	20	**PHG D98**
	2 720	2 642	104,00	32	20	**PHG D104**
	2 740	2 667	105,00	32	20	**PHG D105**
	2 870	2 794	110,00	32	20	**PHG D110**
	3 080	2 997	118,00	32	20	**PHG D118**
	3 130	3 048	120,00	32	20	**PHG D120**
	3 225	3 150	124,00	32	20	**PHG D124**
	3 330	3 251	128,00	32	20	**PHG D128**
	3 430	3 353	132,00	32	20	**PHG D132**
	3 530	3 454	136,00	32	20	**PHG D136**
	3 555	3 480	137,00	32	20	**PHG D137**
	3 640	3 556	140,00	32	20	**PHG D140**
	3 730	3 658	144,00	32	20	**PHG D144**
	3 830	3 759	148,00	32	20	**PHG D148**
	4 080	4 013	158,00	32	20	**PHG D158**
	4 190	4 115	162,00	32	20	**PHG D162**
	4 320	4 242	167,00	32	20	**PHG D167**
	4 395	4 318	170,00	32	20	**PHG D170**
	4 470	4 394	173,00	32	20	**PHG D173**
	4 580	4 496	177,00	32	20	**PHG D177**
	4 650	4 572	180,00	32	20	**PHG D180**
	4 830	4 750	187,00	32	20	**PHG D187**

Section	Dimensions Pitch length	Inside length		w	h	Designation
–	mm		in.	mm		–
32/D	5 030	4 953	195,00	32	20	**PHG D195**
	5 080	5 004	197,00	32	20	**PHG D197**
	5 360	5 283	208,00	32	20	**PHG D208**
	5 400	5 334	210,00	32	20	**PHG D210**
	5 670	5 588	220,00	32	20	**PHG D220**
	5 790	5 715	225,00	32	20	**PHG D225**
	6 070	5 994	236,00	32	20	**PHG D236**
	6 170	6 096	240,00	32	20	**PHG D240**
	6 380	6 299	248,00	32	20	**PHG D248**
	6 425	6 350	250,00	32	20	**PHG D250**
	6 560	6 477	255,00	32	20	**PHG D255**
	6 780	6 706	264,00	32	20	**PHG D264**
	6 910	6 833	269,00	32	20	**PHG D269**
	6 940	6 858	270,00	32	20	**PHG D270**
	7 190	7 112	280,00	32	20	**PHG D280**
	7 320	7 239	285,00	32	20	**PHG D285**
	7 650	7 569	298,00	32	20	**PHG D298**
	7 700	7 620	300,00	32	20	**PHG D300**
	8 080	8 001	315,00	32	20	**PHG D315**
	8 410	8 331	328,00	32	20	**PHG D328**
	8 460	8 382	330,00	32	20	**PHG D330**
	9 070	8 992	354,00	32	20	**PHG D354**
	9 220	9 144	360,00	32	20	**PHG D360**
	9 580	9 500	374,00	32	20	**PHG D374**
	9 980	9 906	390,00	32	20	**PHG D390**
	10 085	10 008	394,00	32	20	**PHG D394**
	10 700	10 617	418,00	32	20	**PHG D418**
	12 190	12 116	477,00	32	20	**PHG D477**
38/E	3 076	2 997	118,00	38	23	**PHG E118**
	4 091	4 013	158,00	38	23	**PHG E158**
	4 979	4 902	193,00	38	23	**PHG E193**
	5 030	4 953	195,00	38	23	**PHG E195**
	5 081	5 004	197,00	38	23	**PHG E197**
	5 537	5 461	215,00	38	23	**PHG E215**
	5 664	5 588	220,00	38	23	**PHG E220**
	6 070	5 994	236,00	38	23	**PHG E236**
	6 121	6 045	238,00	38	23	**PHG E238**
	6 172	6 096	240,00	38	23	**PHG E240**
	6 375	6 299	248,00	38	23	**PHG E248**
	6 654	6 579	259,00	38	23	**PHG E259**
	6 806	6 731	265,00	38	23	**PHG E265**
	6 933	6 858	270,00	38	23	**PHG E270**
	7 187	7 112	280,00	38	23	**PHG E280**
	7 567	7 493	295,00	38	23	**PHG E295**
	7 643	7 569	298,00	38	23	**PHG E298**
	7 694	7 620	300,00	38	23	**PHG E300**
	8 075	8 001	315,00	38	23	**PHG E315**
	8 405	8 331	328,00	38	23	**PHG E328**
	8 430	8 357	329,00	38	23	**PHG E329**
	8 455	8 382	330,00	38	23	**PHG E330**
	8 709	8 636	340,00	38	23	**PHG E340**
	9 065	8 992	354,00	38	23	**PHG E354**
	9 166	9 093	358,00	38	23	**PHG E358**
	9 217	9 144	360,00	38	23	**PHG E360**
	10 080	10 008	394,00	38	23	**PHG E394**
	10 689	10 617	418,00	38	23	**PHG E418**
	10 739	10 668	420,00	38	23	**PHG E420**
	11 247	11 176	440,00	38	23	**PHG E440**
	11 272	11 201	441,00	38	23	**PHG E441**
	11 983	11 913	469,00	38	23	**PHG E469**
	12 262	12 192	480,00	38	23	**PHG E480**
	12 566	12 497	492,00	38	23	**PHG E492**
	13 784	13 716	540,00	38	23	**PHG E540**

Non-standard lengths are also available.

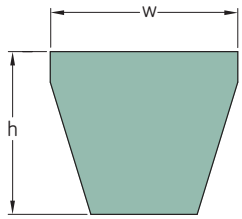

Section	Dimensions Outside length		w	h	Designation
–	mm	in.	mm		–
3V/9N	635	25,0	9	8	**PHG 3V250**
	673	26,5	9	8	**PHG 3V265**
	711	28,0	9	8	**PHG 3V280**
	762	30,0	9	8	**PHG 3V300**
	800	31,5	9	8	**PHG 3V315**
	851	33,5	9	8	**PHG 3V335**
	902	35,5	9	8	**PHG 3V355**
	953	37,5	9	8	**PHG 3V375**
	1 016	40,0	9	8	**PHG 3V400**
	1 080	42,5	9	8	**PHG 3V425**
	1 143	45,0	9	8	**PHG 3V450**
	1 207	47,5	9	8	**PHG 3V475**
	1 270	50,0	9	8	**PHG 3V500**
	1 346	53,0	9	8	**PHG 3V530**
	1 422	56,0	9	8	**PHG 3V560**
	1 524	60,0	9	8	**PHG 3V600**
	1 600	63,0	9	8	**PHG 3V630**
	1 702	67,0	9	8	**PHG 3V670**
	1 803	71,0	9	8	**PHG 3V710**
	1 905	75,0	9	8	**PHG 3V750**
	2 032	80,0	9	8	**PHG 3V800**
	2 159	85,0	9	8	**PHG 3V850**
	2 286	90,0	9	8	**PHG 3V900**
	2 413	95,0	9	8	**PHG 3V950**
	2 540	100,0	9	8	**PHG 3V1000**
	2 692	106,0	9	8	**PHG 3V1060**
	2 845	112,0	9	8	**PHG 3V1120**
	2 997	118,0	9	8	**PHG 3V1180**
	3 175	125,0	9	8	**PHG 3V1250**
	3 353	132,0	9	8	**PHG 3V1320**
	3 556	140,0	9	8	**PHG 3V1400**
5V/15N	1 346	53,0	15	13	**PHG 5V530**
	1 422	56,0	15	13	**PHG 5V560**
	1 524	60,0	15	13	**PHG 5V600**
	1 600	63,0	15	13	**PHG 5V630**
	1 702	67,0	15	13	**PHG 5V670**
	1 803	71,0	15	13	**PHG 5V710**
	1 905	75,0	15	13	**PHG 5V750**
	2 032	80,0	15	13	**PHG 5V800**
	2 159	85,0	15	13	**PHG 5V850**
	2 286	90,0	15	13	**PHG 5V900**
	2 413	95,0	15	13	**PHG 5V950**
	2 540	100,0	15	13	**PHG 5V1000**
	2 692	106,0	15	13	**PHG 5V1060**
	2 845	112,0	15	13	**PHG 5V1120**
	2 997	118,0	15	13	**PHG 5V1180**
	3 175	125,0	15	13	**PHG 5V1250**
	3 353	132,0	15	13	**PHG 5V1320**
	3 556	140,0	15	13	**PHG 5V1400**
	3 810	150,0	15	13	**PHG 5V1500**
	4 064	160,0	15	13	**PHG 5V1600**
	4 318	170,0	15	13	**PHG 5V1700**
	4 572	180,0	15	13	**PHG 5V1800**
	4 826	190,0	15	13	**PHG 5V1900**

Section	Dimensions Outside length		w	h	Designation
–	mm	in.	mm		–
5V/15N	5 080	200,0	15	13	**PHG 5V2000**
	5 385	212,0	15	13	**PHG 5V2120**
	5 690	224,0	15	13	**PHG 5V2240**
	5 994	236,0	15	13	**PHG 5V2360**
	6 350	250,0	15	13	**PHG 5V2500**
	6 731	265,0	15	13	**PHG 5V2650**
	7 112	280,0	15	13	**PHG 5V2800**
	7 620	300,0	15	13	**PHG 5V3000**
	8 001	315,0	15	13	**PHG 5V3150**
	8 509	335,0	15	13	**PHG 5V3350**
	9 017	355,0	15	13	**PHG 5V3550**
8V/25N	2 540	100,0	25	23	**PHG 8V1000**
	2 692	106,0	25	23	**PHG 8V1060**
	2 845	112,0	25	23	**PHG 8V1120**
	2 997	118,0	25	23	**PHG 8V1180**
	3 175	125,0	25	23	**PHG 8V1250**
	3 353	132,0	25	23	**PHG 8V1320**
	3 556	140,0	25	23	**PHG 8V1400**
	3 810	150,0	25	23	**PHG 8V1500**
	4 064	160,0	25	23	**PHG 8V1600**
	4 318	170,0	25	23	**PHG 8V1700**
	4 572	180,0	25	23	**PHG 8V1800**
	4 826	190,0	25	23	**PHG 8V1900**
	5 080	200,0	25	23	**PHG 8V2000**
	5 385	212,0	25	23	**PHG 8V2120**
	5 690	224,0	25	23	**PHG 8V2240**
	5 994	236,0	25	23	**PHG 8V2360**
	6 350	250,0	25	23	**PHG 8V2500**
	6 731	265,0	25	23	**PHG 8V2650**
	7 112	280,0	25	23	**PHG 8V2800**
	7 620	300,0	25	23	**PHG 8V3000**
	8 001	315,0	25	23	**PHG 8V3150**
	8 509	335,0	25	23	**PHG 8V3350**
	9 017	355,0	25	23	**PHG 8V3550**
	9 525	375,0	25	23	**PHG 8V3750**
	10 160	400,0	25	23	**PHG 8V4000**
	10 795	425,0	25	23	**PHG 8V4250**
	11 430	450,0	25	23	**PHG 8V4500**
	12 065	475,0	25	23	**PHG 8V4750**
	12 700	500,0	25	23	**PHG 8V5000**

Non-standard lengths are also available.

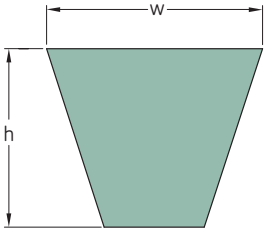

Section	Dimensions Pitch length	w	h	Designation
–	mm			–
XPZ	630	9,7	8	**PHG XPZ630**
	637	9,7	8	**PHG XPZ637**
	662	9,7	8	**PHG XPZ662**
	670	9,7	8	**PHG XPZ670**
	687	9,7	8	**PHG XPZ687**
	710	9,7	8	**PHG XPZ710**
	737	9,7	8	**PHG XPZ737**
	750	9,7	8	**PHG XPZ750**
	760	9,7	8	**PHG XPZ760**
	762	9,7	8	**PHG XPZ762**
	772	9,7	8	**PHG XPZ772**
	787	9,7	8	**PHG XPZ787**
	800	9,7	8	**PHG XPZ800**
	812	9,7	8	**PHG XPZ812**
	837	9,7	8	**PHG XPZ837**
	850	9,7	8	**PHG XPZ850**
	862	9,7	8	**PHG XPZ862**
	875	9,7	8	**PHG XPZ875**
	887	9,7	8	**PHG XPZ887**
	900	9,7	8	**PHG XPZ900**
	912	9,7	8	**PHG XPZ912**
	925	9,7	8	**PHG XPZ925**
	937	9,7	8	**PHG XPZ937**
	950	9,7	8	**PHG XPZ950**
	962	9,7	8	**PHG XPZ962**
	987	9,7	8	**PHG XPZ987**
	1 000	9,7	8	**PHG XPZ1000**
	1 010	9,7	8	**PHG XPZ1010**
	1 012	9,7	8	**PHG XPZ1012**
	1 037	9,7	8	**PHG XPZ1037**
	1 060	9,7	8	**PHG XPZ1060**
	1 077	9,7	8	**PHG XPZ1077**
	1 080	9,7	8	**PHG XPZ1080**
	1 087	9,7	8	**PHG XPZ1087**
	1 112	9,7	8	**PHG XPZ1112**
	1 120	9,7	8	**PHG XPZ1120**
	1 137	9,7	8	**PHG XPZ1137**
	1 140	9,7	8	**PHG XPZ1140**
	1 162	9,7	8	**PHG XPZ1162**
	1 180	9,7	8	**PHG XPZ1180**
	1 187	9,7	8	**PHG XPZ1187**
	1 200	9,7	8	**PHG XPZ1200**
	1 202	9,7	8	**PHG XPZ1202**
	1 212	9,7	8	**PHG XPZ1212**
	1 237	9,7	8	**PHG XPZ1237**
	1 250	9,7	8	**PHG XPZ1250**
	1 262	9,7	8	**PHG XPZ1262**
	1 270	9,7	8	**PHG XPZ1270**
	1 287	9,7	8	**PHG XPZ1287**
	1 312	9,7	8	**PHG XPZ1312**
	1 320	9,7	8	**PHG XPZ1320**
	1 337	9,7	8	**PHG XPZ1337**
	1 340	9,7	8	**PHG XPZ1340**
	1 362	9,7	8	**PHG XPZ1362**
	1 400	9,7	8	**PHG XPZ1400**

Section	Dimensions Pitch length	w	h	Designation
–	mm			–
XPZ	1 412	9,7	8	**PHG XPZ1412**
	1 420	9,7	8	**PHG XPZ1420**
	1 487	9,7	8	**PHG XPZ1487**
	1 500	9,7	8	**PHG XPZ1500**
	1 512	9,7	8	**PHG XPZ1512**
	1 520	9,7	8	**PHG XPZ1520**
	1 537	9,7	8	**PHG XPZ1537**
	1 587	9,7	8	**PHG XPZ1587**
	1 600	9,7	8	**PHG XPZ1600**
	1 700	9,7	8	**PHG XPZ1700**
	1 800	9,7	8	**PHG XPZ1800**
	1 850	9,7	8	**PHG XPZ1850**
	1 900	9,7	8	**PHG XPZ1900**
	2 000	9,7	8	**PHG XPZ2000**
	2 030	9,7	8	**PHG XPZ2030**
	2 120	9,7	8	**PHG XPZ2120**
	2 240	9,7	8	**PHG XPZ2240**
	2 280	9,7	8	**PHG XPZ2280**
	2 360	9,7	8	**PHG XPZ2360**
	2 410	9,7	8	**PHG XPZ2410**
	2 500	9,7	8	**PHG XPZ2500**
	2 540	9,7	8	**PHG XPZ2540**
	2 650	9,7	8	**PHG XPZ2650**
	2 800	9,7	8	**PHG XPZ2800**
	3 000	9,7	8	**PHG XPZ3000**
	3 150	9,7	8	**PHG XPZ3150**
	3 350	9,7	8	**PHG XPZ3350**
	3 550	9,7	8	**PHG XPZ3550**
XPA	757	12,7	10	**PHG XPA757**
	782	12,7	10	**PHG XPA782**
	800	12,7	10	**PHG XPA800**
	832	12,7	10	**PHG XPA832**
	850	12,7	10	**PHG XPA850**
	857	12,7	10	**PHG XPA857**
	882	12,7	10	**PHG XPA882**
	900	12,7	10	**PHG XPA900**
	907	12,7	10	**PHG XPA907**
	932	12,7	10	**PHG XPA932**
	950	12,7	10	**PHG XPA950**
	957	12,7	10	**PHG XPA957**
	982	12,7	10	**PHG XPA982**
	1 000	12,7	10	**PHG XPA1000**
	1 007	12,7	10	**PHG XPA1007**
	1 030	12,7	10	**PHG XPA1030**
	1 060	12,7	10	**PHG XPA1060**
	1 082	12,7	10	**PHG XPA1082**
	1 107	12,7	10	**PHG XPA1107**
	1 120	12,7	10	**PHG XPA1120**
	1 157	12,7	10	**PHG XPA1157**
	1 180	12,7	10	**PHG XPA1180**
	1 207	12,7	10	**PHG XPA1207**
	1 232	12,7	10	**PHG XPA1232**
	1 250	12,7	10	**PHG XPA1250**
	1 257	12,7	10	**PHG XPA1257**

Section	Dimensions Pitch length	w	h	Designation
–	mm			–
XPA	1 282	12,7	10	**PHG XPA1282**
	1 307	12,7	10	**PHG XPA1307**
	1 320	12,7	10	**PHG XPA1320**
	1 332	12,7	10	**PHG XPA1332**
	1 357	12,7	10	**PHG XPA1357**
	1 400	12,7	10	**PHG XPA1400**
	1 482	12,7	10	**PHG XPA1482**
	1 500	12,7	10	**PHG XPA1500**
	1 507	12,7	10	**PHG XPA1507**
	1 532	12,7	10	**PHG XPA1532**
	1 582	12,7	10	**PHG XPA1582**
	1 600	12,7	10	**PHG XPA1600**
	1 700	12,7	10	**PHG XPA1700**
	1 800	12,7	10	**PHG XPA1800**
	1 900	12,7	10	**PHG XPA1900**
	2 000	12,7	10	**PHG XPA2000**
	2 120	12,7	10	**PHG XPA2120**
	2 240	12,7	10	**PHG XPA2240**
	2 360	12,7	10	**PHG XPA2360**
	2 500	12,7	10	**PHG XPA2500**
	2 650	12,7	10	**PHG XPA2650**
	2 800	12,7	10	**PHG XPA2800**
	3 000	12,7	10	**PHG XPA3000**
	3 150	12,7	10	**PHG XPA3150**
	3 350	12,7	10	**PHG XPA3350**
	3 550	12,7	10	**PHG XPA3550**
XPB	1 250	16,3	13	**PHG XPB1250**
	1 260	16,3	13	**PHG XPB1260**
	1 320	16,3	13	**PHG XPB1320**
	1 340	16,3	13	**PHG XPB1340**
	1 400	16,3	13	**PHG XPB1400**
	1 410	16,3	13	**PHG XPB1410**
	1 500	16,3	13	**PHG XPB1500**
	1 590	16,3	13	**PHG XPB1590**
	1 600	16,3	13	**PHG XPB1600**
	1 690	16,3	13	**PHG XPB1690**
	1 700	16,3	13	**PHG XPB1700**
	1 800	16,3	13	**PHG XPB1800**
	1 900	16,3	13	**PHG XPB1900**
	2 000	16,3	13	**PHG XPB2000**
	2 020	16,3	13	**PHG XPB2020**
	2 120	16,3	13	**PHG XPB2120**
	2 150	16,3	13	**PHG XPB2150**
	2 240	16,3	13	**PHG XPB2240**
	2 280	16,3	13	**PHG XPB2280**
	2 360	16,3	13	**PHG XPB2360**
	2 500	16,3	13	**PHG XPB2500**
	2 530	16,3	13	**PHG XPB2530**
	2 650	16,3	13	**PHG XPB2650**
	2 680	16,3	13	**PHG XPB2680**
	2 800	16,3	13	**PHG XPB2800**
	3 000	16,3	13	**PHG XPB3000**
	3 150	16,3	13	**PHG XPB3150**
	3 350	16,3	13	**PHG XPB3350**

Non-standard lengths are also available.

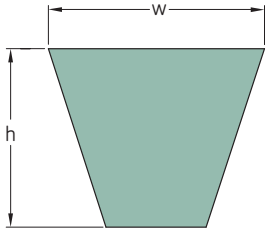

Section	Dimensions Pitch length	w	h	Designation
–	mm			–
XPB	3 550	16,3	13	**PHG XPB3550**
XPC	2 000	22,0	18	**PHG XPC2000**
	2 120	22,0	18	**PHG XPC2120**
	2 240	22,0	18	**PHG XPC2240**
	2 360	22,0	18	**PHG XPC2360**
	2 500	22,0	18	**PHG XPC2500**
	2 650	22,0	18	**PHG XPC2650**
	2 800	22,0	18	**PHG XPC2800**
	3 000	22,0	18	**PHG XPC3000**
	3 150	22,0	18	**PHG XPC3150**
	3 350	22,0	18	**PHG XPC3350**
	3 550	22,0	18	**PHG XPC3550**

Non-standard lengths are also available.

Equivalent / Interchange For ISO & RMA Narrow Wedge V-Belts

Section ISO	Dimensions Pitch length	w	h	Designation ISO	Section RMA	Dimensions Outside length	w	h	Designation RMA
–	mm			–	–	inch	mm		–
SPZ	630	9,7	8	**PHG SPZ630**	**3V/9N**	25,0	9	8	**PHG 3V250**
	670			**PHG SPZ670**		26,5	9	8	**PHG 3V265**
	710	9,7	8	**PHG SPZ710**		28,0	9	8	**PHG 3V280**
	760	9,7	8	**PHG SPZ760**		30,0	9	8	**PHG 3V300**
	800	9,7	8	**PHG SPZ800**		31,5	9	8	**PHG 3V315**
	900	9,7	8	**PHG SPZ900**		33,5	9	8	**PHG 3V355**
	937*	9,7	8	**PHG SPZ937**		37,0	9	8	**PHG 3V370**
	1 010	9,7	8	**PHG SPZ1010**		40,0	9	8	**PHG 3V400**
	1 080	9,7	8	**PHG SPZ1080**		42,5	9	8	**PHG 3V425**
	1 137*	9,7	8	**PHG SPZ1137**		45,0	9	8	**PHG 3V450**
	1 200	9,7	8	**PHG SPZ1200**		47,5	9	8	**PHG 3V475**
	1 270	9,7	8	**PHG SPZ1270**		50,0	9	8	**PHG 3V500**
	1 340	9,7	8	**PHG SPZ1340**		53,0	9	8	**PHG 3V530**
	1 420	9,7	8	**PHG SPZ1420**		56,0	9	8	**PHG 3V560**
	1 470*	9,7	8	**PHG SPZ1470**		58,0	9	8	**PHG 3V580**
	1 520	9,7	8	**PHG SPZ1520**		60,0	9	8	**PHG 3V600**
	1 562*	9,7	8	**PHG SPZ1562**		61,7	9	8	**PHG 3V617**
	1 600	9,7	8	**PHG SPZ1600**		63,0	9	8	**PHG 3V630**
	1 650	9,7	8	**PHG SPZ1650**		65,0	9	8	**PHG 3V650**
	1 700	9,7	8	**PHG SPZ1700**		67,0	9	8	**PHG 3V670**
	1 800	9,7	8	**PHG SPZ1800**		71,0	9	8	**PHG 3V710**
	1 850	9,7	8	**PHG SPZ1850**		73,0	9	8	**PHG 3V730**
	1 900	9,7	8	**PHG SPZ1900**		75,0	9	8	**PHG 3V750**
	2 037*	9,7	8	**PHG SPZ2037**		80,0	9	8	**PHG 3V800**
	2 160	9,7	8	**PHG SPZ2160**		85,0	9	8	**PHG 3V850**
	2 280	9,7	8	**PHG SPZ2280**		90,0	9	8	**PHG 3V900**
	2 410	9,7	8	**PHG SPZ2410**		95,0	9	8	**PHG 3V950**
	2 540	9,7	8	**PHG SPZ2540**		100,0	9	8	**PHG 3V1000**
	2 690	9,7	8	**PHG SPZ2690**		106,0	9	8	**PHG 3V1060**
	2 840	9,7	8	**PHG SPZ2840**		112,0	9	8	**PHG 3V1120**
	3 000	9,7	8	**PHG SPZ3000**		118,0	9	8	**PHG 3V1180**
	3 170	9,7	8	**PHG SPZ3170**		125,0	9	8	**PHG 3V1250**
	3 550	9,7	8	**PHG SPZ3550**		140,0	9	8	**PHG 3V1400**
SPB	1 260	16,3	13	**PHG SPB1260**	**5V/15N**	50,0	15	13	**PHG 5V500**
	1 340	16,3	13	**PHG SPB1340**		53,0	15	13	**PHG 5V530**
	1 410	16,3	13	**PHG SPB1410**		56,0	15	13	**PHG 5V560**
	1 600	16,3	13	**PHG SPB1600**		63,0	15	13	**PHG 5V630**
	1 800	16,3	13	**PHG SPB1800**		71,0	15	13	**PHG 5V710**
	2 020	16,3	13	**PHG SPB2020**		80,0	15	13	**PHG 5V800**
	2 150	16,3	13	**PHG SPB2150**		85,0	15	13	**PHG 5V850**
	2 280	16,3	13	**PHG SPB2280**		90,0	15	13	**PHG 5V900**
	2 410	16,3	13	**PHG SPB2410**		95,0	15	13	**PHG 5V950**
	2 530	16,3	13	**PHG SPB2530**		100,0	15	13	**PHG 5V1000**
	2 680	16,3	13	**PHG SPB2680**		106,0	15	13	**PHG 5V1060**
	2 840	16,3	13	**PHG SPB2840**		112,0	15	13	**PHG 5V1120**
	3 000	16,3	13	**PHG SPB3000**		118,0	15	13	**PHG 5V1180**
	3 170**	16,3	13	**PHG SPB3170**		125,0	15	13	**PHG 5V1250**
	3 350	16,3	13	**PHG SPB3350**		132,0	15	13	**PHG 5V1320**
	3 550	16,3	13	**PHG SPB3550**		140,0	15	13	**PHG 5V1400**
	3 800	16,3	13	**PHG SPB3800**		150,0	15	13	**PHG 5V1500**
	4 060	16,3	13	**PHG SPB4060**		160,0	15	13	**PHG 5V1600**
	4 310	16,3	13	**PHG SPB4310**		170,0	15	13	**PHG 5V1700**
	4 560	16,3	13	**PHG SPB4560**		180,0	15	13	**PHG 5V1800**
	4 820	16,3	13	**PHG SPB4820**		190,0	15	13	**PHG 5V1900**
	5 070	16,3	13	**PHG SPB5070**		200,0	15	13	**PHG 5V2000**
	5 380	16,3	13	**PHG SPB5380**		212,0	15	13	**PHG 5V2120**
	5 680	16,3	13	**PHG SPB5680**		224,0	15	13	**PHG 5V2240**
	6 000	16,3	13	**PHG SPB6000**		236,0	15	13	**PHG 5V2360**
	6 340	16,3	13	**PHG SPB6340**		250,0	15	13	**PHG 5V2500**
	7 100	16,3	13	**PHG SPB7100**		280,0	15	13	**PHG 5V2800**
	8 000	16,3	13	**PHG SPB8000**		315,0	15	13	**PHG 5V3150**

* Belts have a slight variation in pitch length.
*** 3170 (Lp) - Check availability*

RAW EDGE BELTS
Belts up to and including 3500mm (Lp) may also available in RAW EDGE COG construction. Designations are PHG XPB*** and PHG 5VX*** respectively.

BANDED BELTS (SPZ/XPZ/3V/3VX and SPB/XPB/5V/5VX)
As the TRANVERSE pitch (between pulley grooves) of the ISO and RMA standards varies, a check should be made of BOTH pulleys before selecting, interchanging or using BANDED belts .
Both pulleys must have the same TRANSVERSE pitch dimension.

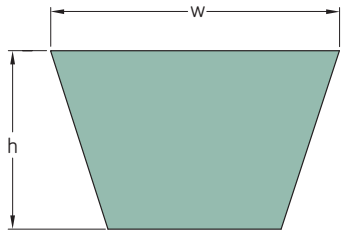

Section	Dimensions Pitch length	Inside length		w	h	Designation
–	mm		in.	mm		–
X10/ZX	600	584	23,00	10	6	**PHG ZX23**
	620	610	24,00	10	6	**PHG ZX24**
	650	635	25,00	10	6	**PHG ZX25**
	680	660	26,00	10	6	**PHG ZX26**
	700	686	27,00	10	6	**PHG ZX27**
	725	711	28,00	10	6	**PHG ZX28**
	750	737	29,00	10	6	**PHG ZX29**
	780	762	30,00	10	6	**PHG ZX30**
	800	787	31,00	10	6	**PHG ZX31**
	840	813	32,00	10	6	**PHG ZX32**
	850	838	33,00	10	6	**PHG ZX33**
	875	864	34,00	10	6	**PHG ZX34**
	900	889	35,00	10	6	**PHG ZX35**
	930	914	36,00	10	6	**PHG ZX36**
	950	940	37,00	10	6	**PHG ZX37**
	980	965	38,00	10	6	**PHG ZX38**
	1 035	1 016	40,00	10	6	**PHG ZX40**
	1 055	1 041	41,00	10	6	**PHG ZX41**
	1 080	1 067	42,00	10	6	**PHG ZX42**
	1 105	1 092	43,00	10	6	**PHG ZX43**
	1 130	1 118	44,00	10	6	**PHG ZX44**
	1 155	1 143	45,00	10	6	**PHG ZX45**
	1 290	1 270	50,00	10	6	**PHG ZX50**
	1 340	1 321	52,00	10	6	**PHG ZX52**
	1 380	1 346	53,00	10	6	**PHG ZX53**
	1 390	1 372	54,00	10	6	**PHG ZX54**
	1 420	1 397	55,00	10	6	**PHG ZX55**
	1 465	1 448	57,00	10	6	**PHG ZX57**
	1 515	1 499	59,00	10	6	**PHG ZX59**
	1 570	1 549	61,00	10	6	**PHG ZX61**
	1 620	1 600	63,00	10	6	**PHG ZX63**
	1 670	1 651	65,00	10	6	**PHG ZX65**
	1 695	1 676	66,00	10	6	**PHG ZX66**
	1 720	1 702	67,00	10	6	**PHG ZX67**
	1 750	1 727	68,00	10	6	**PHG ZX68**
	1 770	1 753	69,00	10	6	**PHG ZX69**
	1 820	1 803	71,00	10	6	**PHG ZX71**
	2 000	1 981	78,00	10	6	**PHG ZX78**
X13/AX	570	533	21,00	13	8	**PHG AX21**
	590	559	22,00	13	8	**PHG AX22**
	620	584	23,00	13	8	**PHG AX23**
	640	610	24,00	13	8	**PHG AX24**
	670	635	25,00	13	8	**PHG AX25**
	700	660	26,00	13	8	**PHG AX26**
	720	686	27,00	13	8	**PHG AX27**
	740	711	28,00	13	8	**PHG AX28**
	770	737	29,00	13	8	**PHG AX29**
	790	762	30,00	13	8	**PHG AX30**
	820	787	31,00	13	8	**PHG AX31**
	850	813	32,00	13	8	**PHG AX32**
	870	838	33,00	13	8	**PHG AX33**
	890	864	34,00	13	8	**PHG AX34**
	920	889	35,00	13	8	**PHG AX35**
	950	914	36,00	13	8	**PHG AX36**

Section	Dimensions Pitch length	Inside length		w	h	Designation
–	mm		in.	mm		–
X13/AX	970	940	37,00	13	8	**PHG AX37**
	990	965	38,00	13	8	**PHG AX38**
	1 020	991	39,00	13	8	**PHG AX39**
	1 050	1 016	40,00	13	8	**PHG AX40**
	1 070	1 041	41,00	13	8	**PHG AX41**
	1 100	1 067	42,00	13	8	**PHG AX42**
	1 130	1 092	43,00	13	8	**PHG AX43**
	1 150	1 118	44,00	13	8	**PHG AX44**
	1 180	1 143	45,00	13	8	**PHG AX45**
	1 200	1 168	46,00	13	8	**PHG AX46**
	1 230	1 194	47,00	13	8	**PHG AX47**
	1 250	1 219	48,00	13	8	**PHG AX48**
	1 280	1 245	49,00	13	8	**PHG AX49**
	1 300	1 270	50,00	13	8	**PHG AX50**
	1 330	1 295	51,00	13	8	**PHG AX51**
	1 360	1 321	52,00	13	8	**PHG AX52**
	1 380	1 346	53,00	13	8	**PHG AX53**
	1 410	1 372	54,00	13	8	**PHG AX54**
	1 430	1 397	55,00	13	8	**PHG AX55**
	1 460	1 422	56,00	13	8	**PHG AX56**
	1 480	1 448	57,00	13	8	**PHG AX57**
	1 510	1 473	58,00	13	8	**PHG AX58**
	1 530	1 499	59,00	13	8	**PHG AX59**
	1 550	1 524	60,00	13	8	**PHG AX60**
	1 580	1 549	61,00	13	8	**PHG AX61**
	1 610	1 575	62,00	13	8	**PHG AX62**
	1 640	1 600	63,00	13	8	**PHG AX63**
	1 660	1 626	64,00	13	8	**PHG AX64**
	1 690	1 651	65,00	13	8	**PHG AX65**
	1 710	1 676	66,00	13	8	**PHG AX66**
	1 740	1 702	67,00	13	8	**PHG AX67**
	1 760	1 727	68,00	13	8	**PHG AX68**
	1 790	1 753	69,00	13	8	**PHG AX69**
	1 810	1 778	70,00	13	8	**PHG AX70**
	1 840	1 803	71,00	13	8	**PHG AX71**
	1 860	1 829	72,00	13	8	**PHG AX72**
	1 890	1 854	73,00	13	8	**PHG AX73**
	1 920	1 880	74,00	13	8	**PHG AX74**
	1 940	1 905	75,00	13	8	**PHG AX75**
	1 960	1 930	76,00	13	8	**PHG AX76**
	1 990	1 956	77,00	13	8	**PHG AX77**
	2 020	1 981	78,00	13	8	**PHG AX78**
	2 050	2 007	79,00	13	8	**PHG AX79**
	2 070	2 032	80,00	13	8	**PHG AX80**
	2 090	2 057	81,00	13	8	**PHG AX81**
	2 120	2 083	82,00	13	8	**PHG AX82**
	2 140	2 108	83,00	13	8	**PHG AX83**
	2 170	2 134	84,00	13	8	**PHG AX84**
	2 200	2 159	85,00	13	8	**PHG AX85**
	2 220	2 184	86,00	13	8	**PHG AX86**
	2 240	2 210	87,00	13	8	**PHG AX87**
	2 270	2 235	88,00	13	8	**PHG AX88**
	2 300	2 261	89,00	13	8	**PHG AX89**
	2 320	2 286	90,00	13	8	**PHG AX90**
	2 350	2 311	91,00	13	8	**PHG AX91**

Non-standard lengths are also available.

Section	Dimensions Pitch length	Inside length		w	h	Designation
–	mm		in.	mm		–
X13/AX	2 400	2 362	93,00	13	8	**PHG AX93**
	2 420	2 388	94,00	13	8	**PHG AX94**
	2 450	2 413	95,00	13	8	**PHG AX95**
	2 480	2 438	96,00	13	8	**PHG AX96**
	2 500	2 464	97,00	13	8	**PHG AX97**
	2 520	2 489	98,00	13	8	**PHG AX98**
	2 570	2 540	100,00	13	8	**PHG AX100**
	2 650	2 616	103,00	13	8	**PHG AX103**
	2 680	2 642	104,00	13	8	**PHG AX104**
	2 700	2 667	105,00	13	8	**PHG AX105**
	2 830	2 794	110,00	13	8	**PHG AX110**
	2 880	2 845	112,00	13	8	**PHG AX112**
	3 030	2 997	118,00	13	8	**PHG AX118**
	3 190	3 150	124,00	13	8	**PHG AX124**
	3 390	3 353	132,00	13	8	**PHG AX132**
X17/BX	624	584	23,00	17	11	**PHG BX23**
	675	635	25,00	17	11	**PHG BX25**
	700	660	26,00	17	11	**PHG BX26**
	750	711	28,00	17	11	**PHG BX28**
	770	737	29,00	17	11	**PHG BX29**
	800	762	30,00	17	11	**PHG BX30**
	830	787	31,00	17	11	**PHG BX31**
	860	813	32,00	17	11	**PHG BX32**
	880	838	33,00	17	11	**PHG BX33**
	910	864	34,00	17	11	**PHG BX34**
	930	889	35,00	17	11	**PHG BX35**
	960	914	36,00	17	11	**PHG BX36**
	980	940	37,00	17	11	**PHG BX37**
	1 000	965	38,00	17	11	**PHG BX38**
	1 030	991	39,00	17	11	**PHG BX39**
	1 060	1 016	40,00	17	11	**PHG BX40**
	1 080	1 041	41,00	17	11	**PHG BX41**
	1 100	1 067	42,00	17	11	**PHG BX42**
	1 130	1 092	43,00	17	11	**PHG BX43**
	1 160	1 118	44,00	17	11	**PHG BX44**
	1 180	1 143	45,00	17	11	**PHG BX45**
	1 210	1 168	46,00	17	11	**PHG BX46**
	1 240	1 194	47,00	17	11	**PHG BX47**
	1 260	1 219	48,00	17	11	**PHG BX48**
	1 290	1 245	49,00	17	11	**PHG BX49**
	1 310	1 270	50,00	17	11	**PHG BX50**
	1 340	1 295	51,00	17	11	**PHG BX51**
	1 370	1 321	52,00	17	11	**PHG BX52**
	1 390	1 346	53,00	17	11	**PHG BX53**
	1 410	1 372	54,00	17	11	**PHG BX54**
	1 440	1 397	55,00	17	11	**PHG BX55**
	1 460	1 422	56,00	17	11	**PHG BX56**
	1 490	1 448	57,00	17	11	**PHG BX57**
	1 510	1 473	58,00	17	11	**PHG BX58**
	1 540	1 499	59,00	17	11	**PHG BX59**
	1 560	1 524	60,00	17	11	**PHG BX60**
	1 590	1 549	61,00	17	11	**PHG BX61**
	1 620	1 575	62,00	17	11	**PHG BX62**
	1 640	1 600	63,00	17	11	**PHG BX63**
	1 670	1 626	64,00	17	11	**PHG BX64**
	1 690	1 651	65,00	17	11	**PHG BX65**
	1 720	1 676	66,00	17	11	**PHG BX66**
	1 740	1 702	67,00	17	11	**PHG BX67**
	1 760	1 727	68,00	17	11	**PHG BX68**
	1 800	1 753	69,00	17	11	**PHG BX69**
	1 820	1 778	70,00	17	11	**PHG BX70**
	1 850	1 803	71,00	17	11	**PHG BX71**
	1 870	1 829	72,00	17	11	**PHG BX72**
	1 900	1 854	73,00	17	11	**PHG BX73**
	1 920	1 880	74,00	17	11	**PHG BX74**
	1 950	1 905	75,00	17	11	**PHG BX75**
	1 970	1 930	76,00	17	11	**PHG BX76**
	2 000	1 956	77,00	17	11	**PHG BX77**
	2 020	1 981	78,00	17	11	**PHG BX78**
	2 050	2 007	79,00	17	11	**PHG BX79**
	2 070	2 032	80,00	17	11	**PHG BX80**
	2 100	2 057	81,00	17	11	**PHG BX81**
	2 130	2 083	82,00	17	11	**PHG BX82**
	2 150	2 108	83,00	17	11	**PHG BX83**
	2 180	2 134	84,00	17	11	**PHG BX84**
	2 200	2 159	85,00	17	11	**PHG BX85**

Section	Dimensions Pitch length	Inside length		w	h	Designation
–	mm		in.	mm		–
X17/BX	2 230	2 184	86,00	17	11	**PHG BX86**
	2 250	2 210	87,00	17	11	**PHG BX87**
	2 280	2 235	88,00	17	11	**PHG BX88**
	2 300	2 261	89,00	17	11	**PHG BX89**
	2 330	2 286	90,00	17	11	**PHG BX90**
	2 350	2 311	91,00	17	11	**PHG BX91**
	2 380	2 337	92,00	17	11	**PHG BX92**
	2 400	2 362	93,00	17	11	**PHG BX93**
	2 420	2 388	94,00	17	11	**PHG BX94**
	2 450	2 413	95,00	17	11	**PHG BX95**
	2 480	2 438	96,00	17	11	**PHG BX96**
	2 500	2 464	97,00	17	11	**PHG BX97**
	2 530	2 489	98,00	17	11	**PHG BX98**
	2 560	2 515	99,00	17	11	**PHG BX99**
	2 580	2 540	100,00	17	11	**PHG BX100**
	2 660	2 616	103,00	17	11	**PHG BX103**
	2 680	2 642	104,00	17	11	**PHG BX104**
	2 700	2 667	105,00	17	11	**PHG BX105**
	2 740	2 692	106,00	17	11	**PHG BX106**
	2 790	2 743	108,00	17	11	**PHG BX108**
	2 840	2 794	110,00	17	11	**PHG BX110**
	2 890	2 845	112,00	17	11	**PHG BX112**
	2 910	2 870	113,00	17	11	**PHG BX113**
	2 960	2 921	115,00	17	11	**PHG BX115**
	2 990	2 946	116,00	17	11	**PHG BX116**
	3 040	2 997	118,00	17	11	**PHG BX118**
	3 090	3 048	120,00	17	11	**PHG BX120**
	3 165	3 124	123,00	17	11	**PHG BX123**
	3 200	3 150	124,00	17	11	**PHG BX124**
	3 240	3 200	126,00	17	11	**PHG BX126**
	3 290	3 251	128,00	17	11	**PHG BX128**
	3 400	3 353	132,00	17	11	**PHG BX132**
X22/CX	1 050	991	39,00	22	14	**PHG CX39**
	1 150	1 092	43,00	22	14	**PHG CX43**
	1 300	1 245	49,00	22	14	**PHG CX49**
	1 350	1 295	51,00	22	14	**PHG CX51**
	1 370	1 321	52,00	22	14	**PHG CX52**
	1 450	1 397	55,00	22	14	**PHG CX55**
	1 560	1 499	59,00	22	14	**PHG CX59**
	1 580	1 524	60,00	22	14	**PHG CX60**
	1 630	1 575	62,00	22	14	**PHG CX62**
	1 760	1 702	67,00	22	14	**PHG CX67**
	1 780	1 727	68,00	22	14	**PHG CX68**
	1 860	1 803	71,00	22	14	**PHG CX71**
	1 880	1 829	72,00	22	14	**PHG CX72**
	1 950	1 905	75,00	22	14	**PHG CX75**
	2 040	1 981	78,00	22	14	**PHG CX78**
	2 060	2 007	79,00	22	14	**PHG CX79**
	2 110	2 057	81,00	22	14	**PHG CX81**
	2 220	2 159	85,00	22	14	**PHG CX85**
	2 290	2 235	88,00	22	14	**PHG CX88**
	2 340	2 286	90,00	22	14	**PHG CX90**
	2 420	2 362	93,00	22	14	**PHG CX93**
	2 490	2 438	96,00	22	14	**PHG CX96**
	2 550	2 489	98,00	22	14	**PHG CX98**
	2 600	2 540	100,00	22	14	**PHG CX100**
	2 620	2 565	101,00	22	14	**PHG CX101**
	2 720	2 667	105,00	22	14	**PHG CX105**
	2 825	2 769	109,00	22	14	**PHG CX109**
	2 850	2 794	110,00	22	14	**PHG CX110**
	2 880	2 819	111,00	22	14	**PHG CX111**
	2 900	2 845	112,00	22	14	**PHG CX112**
	2 980	2 921	115,00	22	14	**PHG CX115**
	3 050	2 997	118,00	22	14	**PHG CX118**
	3 100	3 048	120,00	22	14	**PHG CX120**
	3 210	3 150	124,00	22	14	**PHG CX124**
	3 310	3 251	128,00	22	14	**PHG CX128**
	3 410	3 353	132,00	22	14	**PHG CX132**

Non-standard lengths are also available.

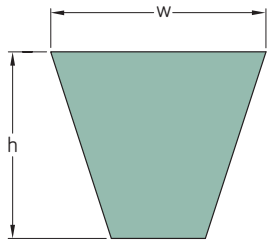

Section	Dimensions Outside length		w	h	Designation
–	mm	in.	mm		–
3VX/9NX	635	25,0	9	8	**PHG 3VX250**
	673	26,5	9	8	**PHG 3VX265**
	711	28,0	9	8	**PHG 3VX280**
	762	30,0	9	8	**PHG 3VX300**
	800	31,5	9	8	**PHG 3VX315**
	851	33,5	9	8	**PHG 3VX335**
	902	35,5	9	8	**PHG 3VX355**
	953	37,5	9	8	**PHG 3VX375**
	1 016	40,0	9	8	**PHG 3VX400**
	1 080	42,5	9	8	**PHG 3VX425**
	1 143	45,0	9	8	**PHG 3VX450**
	1 207	47,5	9	8	**PHG 3VX475**
	1 270	50,0	9	8	**PHG 3VX500**
	1 346	53,0	9	8	**PHG 3VX530**
	1 422	56,0	9	8	**PHG 3VX560**
	1 524	60,0	9	8	**PHG 3VX600**
	1 600	63,0	9	8	**PHG 3VX630**
	1 702	67,0	9	8	**PHG 3VX670**
	1 803	71,0	9	8	**PHG 3VX710**
	1 905	75,0	9	8	**PHG 3VX750**
	2 032	80,0	9	8	**PHG 3VX800**
	2 159	85,0	9	8	**PHG 3VX850**
	2 286	90,0	9	8	**PHG 3VX900**
	2 413	95,0	9	8	**PHG 3VX950**
	2 540	100,0	9	8	**PHG 3VX1000**
	2 692	106,0	9	8	**PHG 3VX1060**
	2 845	112,0	9	8	**PHG 3VX1120**
	2 997	118,0	9	8	**PHG 3VX1180**
	3 175	125,0	9	8	**PHG 3VX1250**
	3 353	132,0	9	8	**PHG 3VX1320**
	3 556	140,0	9	8	**PHG 3VX1400**
	3 810	150,0	9	8	**PHG 3VX1500**
5VX/15NX	1 270	50,0	15	13	**PHG 5VX500**
	1 346	53,0	15	13	**PHG 5VX530**
	1 422	56,0	15	13	**PHG 5VX560**
	1 524	60,0	15	13	**PHG 5VX600**
	1 600	63,0	15	13	**PHG 5VX630**
	1 702	67,0	15	13	**PHG 5VX670**
	1 803	71,0	15	13	**PHG 5VX710**
	1 905	75,0	15	13	**PHG 5VX750**
	2 032	80,0	15	13	**PHG 5VX800**
	2 159	85,0	15	13	**PHG 5VX850**
	2 286	90,0	15	13	**PHG 5VX900**
	2 413	95,0	15	13	**PHG 5VX950**
	2 540	100,0	15	13	**PHG 5VX1000**
	2 692	106,0	15	13	**PHG 5VX1060**
	2 845	112,0	15	13	**PHG 5VX1120**
	2 997	118,0	15	13	**PHG 5VX1180**
	3 175	125,0	15	13	**PHG 5VX1250**
	3 353	132,0	15	13	**PHG 5VX1320**
	3 556	140,0	15	13	**PHG 5VX1400**
	3 810	150,0	15	13	**PHG 5VX1500**
	4 064	160,0	15	13	**PHG 5VX1600**
	4 318	170,0	15	13	**PHG 5VX1700**

Section	Dimensions Outside length		w	h	Designation
–	mm	in.	mm		–
5VX/15NX	4 572	180,0	15	13	**PHG 5VX1800**
	4 826	190,0	15	13	**PHG 5VX1900**
	5 080	200,0	15	13	**PHG 5VX2000**

Non-standard lengths are also available.

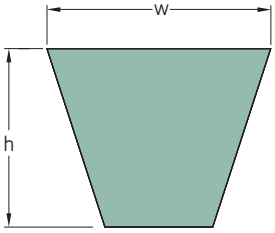

Section	Dimensions Pitch length	w	h	Designation
–	mm			–
SPZ XP	1 202	9,7	8	**PHG SPZ1202XP**
	1 212	9,7	8	**PHG SPZ1212XP**
	1 237	9,7	8	**PHG SPZ1237XP**
	1 250	9,7	8	**PHG SPZ1250XP**
	1 262	9,7	8	**PHG SPZ1262XP**
	1 287	9,7	8	**PHG SPZ1287XP**
	1 312	9,7	8	**PHG SPZ1312XP**
	1 320	9,7	8	**PHG SPZ1320XP**
	1 337	9,7	8	**PHG SPZ1337XP**
	1 362	9,7	8	**PHG SPZ1362XP**
	1 387	9,7	8	**PHG SPZ1387XP**
	1 400	9,7	8	**PHG SPZ1400XP**
	1 412	9,7	8	**PHG SPZ1412XP**
	1 437	9,7	8	**PHG SPZ1437XP**
	1 462	9,7	8	**PHG SPZ1462XP**
	1 487	9,7	8	**PHG SPZ1487XP**
	1 500	9,7	8	**PHG SPZ1500XP**
	1 512	9,7	8	**PHG SPZ1512XP**
	1 537	9,7	8	**PHG SPZ1537XP**
	1 562	9,7	8	**PHG SPZ1562XP**
	1 587	9,7	8	**PHG SPZ1587XP**
	1 600	9,7	8	**PHG SPZ1600XP**
	1 612	9,7	8	**PHG SPZ1612XP**
	1 637	9,7	8	**PHG SPZ1637XP**
	1 662	9,7	8	**PHG SPZ1662XP**
	1 687	9,7	8	**PHG SPZ1687XP**
	1 700	9,7	8	**PHG SPZ1700XP**
	1 737	9,7	8	**PHG SPZ1737XP**
	1 762	9,7	8	**PHG SPZ1762XP**
	1 787	9,7	8	**PHG SPZ1787XP**
	1 800	9,7	8	**PHG SPZ1800XP**
	1 837	9,7	8	**PHG SPZ1837XP**
	1 862	9,7	8	**PHG SPZ1862XP**
	1 887	9,7	8	**PHG SPZ1887XP**
	1 900	9,7	8	**PHG SPZ1900XP**
	1 937	9,7	8	**PHG SPZ1937XP**
	1 987	9,7	8	**PHG SPZ1987XP**
	2 000	9,7	8	**PHG SPZ2000XP**
	2 037	9,7	8	**PHG SPZ2037XP**
	2 120	9,7	8	**PHG SPZ2120XP**
	2 137	9,7	8	**PHG SPZ2137XP**
	2 187	9,7	8	**PHG SPZ2187XP**
	2 240	9,7	8	**PHG SPZ2240XP**
	2 287	9,7	8	**PHG SPZ2287XP**
	2 360	9,7	8	**PHG SPZ2360XP**
	2 500	9,7	8	**PHG SPZ2500XP**
	2 650	9,7	8	**PHG SPZ2650XP**
	2 800	9,7	8	**PHG SPZ2800XP**
	3 000	9,7	8	**PHG SPZ3000XP**
	3 150	9,7	8	**PHG SPZ3150XP**
	3 350	9,7	8	**PHG SPZ3350XP**
	3 550	9,7	8	**PHG SPZ3550XP**
SPA XP	1 207	12,7	10	**PHG SPA1207XP**
	1 232	12,7	10	**PHG SPA1232XP**

Section	Dimensions Pitch length	w	h	Designation
–	mm			–
SPA XP	1 250	12,7	10	**PHG SPA1250XP**
	1 257	12,7	10	**PHG SPA1257XP**
	1 282	12,7	10	**PHG SPA1282XP**
	1 307	12,7	10	**PHG SPA1307XP**
	1 320	12,7	10	**PHG SPA1320XP**
	1 332	12,7	10	**PHG SPA1332XP**
	1 357	12,7	10	**PHG SPA1357XP**
	1 382	12,7	10	**PHG SPA1382XP**
	1 400	12,7	10	**PHG SPA1400XP**
	1 407	12,7	10	**PHG SPA1407XP**
	1 432	12,7	10	**PHG SPA1432XP**
	1 457	12,7	10	**PHG SPA1457XP**
	1 482	12,7	10	**PHG SPA1482XP**
	1 500	12,7	10	**PHG SPA1500XP**
	1 507	12,7	10	**PHG SPA1507XP**
	1 532	12,7	10	**PHG SPA1532XP**
	1 557	12,7	10	**PHG SPA1557XP**
	1 582	12,7	10	**PHG SPA1582XP**
	1 600	12,7	10	**PHG SPA1600XP**
	1 607	12,7	10	**PHG SPA1607XP**
	1 632	12,7	10	**PHG SPA1632XP**
	1 657	12,7	10	**PHG SPA1657XP**
	1 682	12,7	10	**PHG SPA1682XP**
	1 700	12,7	10	**PHG SPA1700XP**
	1 707	12,7	10	**PHG SPA1707XP**
	1 732	12,7	10	**PHG SPA1732XP**
	1 757	12,7	10	**PHG SPA1757XP**
	1 782	12,7	10	**PHG SPA1782XP**
	1 800	12,7	10	**PHG SPA1800XP**
	1 807	12,7	10	**PHG SPA1807XP**
	1 832	12,7	10	**PHG SPA1832XP**
	1 857	12,7	10	**PHG SPA1857XP**
	1 882	12,7	10	**PHG SPA1882XP**
	1 900	12,7	10	**PHG SPA1900XP**
	1 907	12,7	10	**PHG SPA1907XP**
	1 932	12,7	10	**PHG SPA1932XP**
	1 957	12,7	10	**PHG SPA1957XP**
	1 982	12,7	10	**PHG SPA1982XP**
	2 000	12,7	10	**PHG SPA2000XP**
	2 032	12,7	10	**PHG SPA2032XP**
	2 057	12,7	10	**PHG SPA2057XP**
	2 082	12,7	10	**PHG SPA2082XP**
	2 120	12,7	10	**PHG SPA2120XP**
	2 132	12,7	10	**PHG SPA2132XP**
	2 182	12,7	10	**PHG SPA2182XP**
	2 207	12,7	10	**PHG SPA2207XP**
	2 232	12,7	10	**PHG SPA2232XP**
	2 240	12,7	10	**PHG SPA2240XP**
	2 282	12,7	10	**PHG SPA2282XP**
	2 300	12,7	10	**PHG SPA2300XP**
	2 307	12,7	10	**PHG SPA2307XP**
	2 332	12,7	10	**PHG SPA2332XP**
	2 360	12,7	10	**PHG SPA2360XP**
	2 382	12,7	10	**PHG SPA2382XP**
	2 432	12,7	10	**PHG SPA2432XP**

Section	Dimensions Pitch length	w	h	Designation
–	mm			–
SPA XP	2 482	12,7	10	**PHG SPA2482XP**
	2 500	12,7	10	**PHG SPA2500XP**
	2 532	12,7	10	**PHG SPA2532XP**
	2 582	12,7	10	**PHG SPA2582XP**
	2 607	12,7	10	**PHG SPA2607XP**
	2 632	12,7	10	**PHG SPA2632XP**
	2 650	12,7	10	**PHG SPA2650XP**
	2 682	12,7	10	**PHG SPA2682XP**
	2 732	12,7	10	**PHG SPA2732XP**
	2 782	12,7	10	**PHG SPA2782XP**
	2 800	12,7	10	**PHG SPA2800XP**
	2 832	12,7	10	**PHG SPA2832XP**
	2 847	12,7	10	**PHG SPA2847XP**
	2 882	12,7	10	**PHG SPA2882XP**
	2 932	12,7	10	**PHG SPA2932XP**
	2 982	12,7	10	**PHG SPA2982XP**
	3 000	12,7	10	**PHG SPA3000XP**
	3 032	12,7	10	**PHG SPA3032XP**
	3 082	12,7	10	**PHG SPA3082XP**
	3 150	12,7	10	**PHG SPA3150XP**
	3 182	12,7	10	**PHG SPA3182XP**
	3 282	12,7	10	**PHG SPA3282XP**
	3 350	12,7	10	**PHG SPA3350XP**
	3 382	12,7	10	**PHG SPA3382XP**
	3 550	12,7	10	**PHG SPA3550XP**
	3 750	12,7	10	**PHG SPA3750XP**
	4 000	12,7	10	**PHG SPA4000XP**
SPB XP	1 250	16,3	13	**PHG SPB1250XP**
	1 320	16,3	13	**PHG SPB1320XP**
	1 400	16,3	13	**PHG SPB1400XP**
	1 500	16,3	13	**PHG SPB1500XP**
	1 600	16,3	13	**PHG SPB1600XP**
	1 700	16,3	13	**PHG SPB1700XP**
	1 800	16,3	13	**PHG SPB1800XP**
	1 900	16,3	13	**PHG SPB1900XP**
	2 000	16,3	13	**PHG SPB2000XP**
	2 120	16,3	13	**PHG SPB2120XP**
	2 240	16,3	13	**PHG SPB2240XP**
	2 360	16,3	13	**PHG SPB2360XP**
	2 500	16,3	13	**PHG SPB2500XP**
	2 650	16,3	13	**PHG SPB2650XP**
	2 800	16,3	13	**PHG SPB2800XP**
	3 000	16,3	13	**PHG SPB3000XP**
	3 150	16,3	13	**PHG SPB3150XP**
	3 350	16,3	13	**PHG SPB3350XP**
	3 550	16,3	13	**PHG SPB3550XP**
	3 750	16,3	13	**PHG SPB3750XP**
	4 000	16,3	13	**PHG SPB4000XP**
	4 250	16,3	13	**PHG SPB4250XP**
	4 500	16,3	13	**PHG SPB4500XP**
	4 750	16,3	13	**PHG SPB4750XP**
	5 000	16,3	13	**PHG SPB5000XP**
	5 300	16,3	13	**PHG SPB5300XP**
	5 600	16,3	13	**PHG SPB5600XP**

Non-standard lengths are also available.

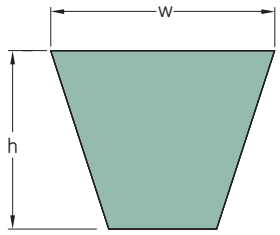

Section	Dimensions Pitch length	w	h	Designation
–	mm			–
SPB XP	6 000	16,3	13	**PHG SPB6000XP**
	6 300	16,3	13	**PHG SPB6300XP**
	6 700	16,3	13	**PHG SPB6700XP**
	7 100	16,3	13	**PHG SPB7100XP**
	7 500	16,3	13	**PHG SPB7500XP**
	8 000	16,3	13	**PHG SPB8000XP**
SPC XP	2 000	22,0	18	**PHG SPC2000XP**
	2 120	22,0	18	**PHG SPC2120XP**
	2 240	22,0	18	**PHG SPC2240XP**
	2 360	22,0	18	**PHG SPC2360XP**
	2 500	22,0	18	**PHG SPC2500XP**
	2 650	22,0	18	**PHG SPC2650XP**
	2 800	22,0	18	**PHG SPC2800XP**
	3 000	22,0	18	**PHG SPC3000XP**
	3 150	22,0	18	**PHG SPC3150XP**
	3 350	22,0	18	**PHG SPC3350XP**
	3 550	22,0	18	**PHG SPC3550XP**
	3 750	22,0	18	**PHG SPC3750XP**
	4 000	22,0	18	**PHG SPC4000XP**
	4 250	22,0	18	**PHG SPC4250XP**
	4 500	22,0	18	**PHG SPC4500XP**
	4 750	22,0	18	**PHG SPC4750XP**
	5 000	22,0	18	**PHG SPC5000XP**
	5 300	22,0	18	**PHG SPC5300XP**
	5 600	22,0	18	**PHG SPC5600XP**
	6 000	22,0	18	**PHG SPC6000XP**
	6 300	22,0	18	**PHG SPC6300XP**
	6 700	22,0	18	**PHG SPC6700XP**
	7 100	22,0	18	**PHG SPC7100XP**
	7 500	22,0	18	**PHG SPC7500XP**
	8 000	22,0	18	**PHG SPC8000XP**
	8 500	22,0	18	**PHG SPC8500XP**
	9 000	22,0	18	**PHG SPC9000XP**
	9 500	22,0	18	**PHG SPC9500XP**
	10 000	22,0	18	**PHG SPC10000XP**

Non-standard lengths are also available.

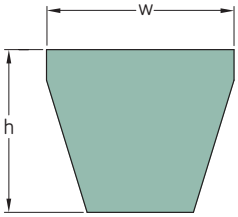

Section	Dimensions Outside length				Designation
			w	h	
–	mm	in.	mm		–
3V XP	1 206	47,5	9	8	**PHG 3V475XP**
	1 270	50,0	9	8	**PHG 3V500XP**
	1 346	53,0	9	8	**PHG 3V530XP**
	1 422	56,0	9	8	**PHG 3V560XP**
	1 524	60,0	9	8	**PHG 3V600XP**
	1 600	63,0	9	8	**PHG 3V630XP**
	1 702	67,0	9	8	**PHG 3V670XP**
	1 803	71,0	9	8	**PHG 3V710XP**
	1 905	75,0	9	8	**PHG 3V750XP**
	2 032	80,0	9	8	**PHG 3V800XP**
	2 159	85,0	9	8	**PHG 3V850XP**
	2 286	90,0	9	8	**PHG 3V900XP**
	2 413	95,0	9	8	**PHG 3V950XP**
	2 540	100,0	9	8	**PHG 3V1000XP**
	2 692	106,0	9	8	**PHG 3V1060XP**
	2 845	112,0	9	8	**PHG 3V1120XP**
	2 997	118,0	9	8	**PHG 3V1180XP**
	3 175	125,0	9	8	**PHG 3V1250XP**
	3 353	132,0	9	8	**PHG 3V1320XP**
	3 556	140,0	9	8	**PHG 3V1400XP**
5V XP	1 346	53,0	15	13	**PHG 5V530XP**
	1 422	56,0	15	13	**PHG 5V560XP**
	1 524	60,0	15	13	**PHG 5V600XP**
	1 600	63,0	15	13	**PHG 5V630XP**
	1 702	67,0	15	13	**PHG 5V670XP**
	1 803	71,0	15	13	**PHG 5V710XP**
	1 905	75,0	15	13	**PHG 5V750XP**
	2 032	80,0	15	13	**PHG 5V800XP**
	2 159	85,0	15	13	**PHG 5V850XP**
	2 286	90,0	15	13	**PHG 5V900XP**
	2 413	95,0	15	13	**PHG 5V950XP**
	2 540	100,0	15	13	**PHG 5V1000XP**
	2 692	106,0	15	13	**PHG 5V1060XP**
	2 845	112,0	15	13	**PHG 5V1120XP**
	2 997	118,0	15	13	**PHG 5V1180XP**
	3 175	125,0	15	13	**PHG 5V1250XP**
	3 353	132,0	15	13	**PHG 5V1320XP**
	3 556	140,0	15	13	**PHG 5V1400XP**
	3 810	150,0	15	13	**PHG 5V1500XP**
	4 064	160,0	15	13	**PHG 5V1600XP**
	4 318	170,0	15	13	**PHG 5V1700XP**
	4 572	180,0	15	13	**PHG 5V1800XP**
	4 826	190,0	15	13	**PHG 5V1900XP**
	5 080	200,0	15	13	**PHG 5V2000XP**
	5 385	212,0	15	13	**PHG 5V2120XP**
	5 690	224,0	15	13	**PHG 5V2240XP**
	5 994	236,0	15	13	**PHG 5V2360XP**
	6 350	250,0	15	13	**PHG 5V2500XP**
	6 731	265,0	15	13	**PHG 5V2650XP**
	7 112	280,0	15	13	**PHG 5V2800XP**
	7 620	300,0	15	13	**PHG 5V3000XP**
	8 001	315,0	15	13	**PHG 5V3150XP**
8V XP	2 540	100,0	25	23	**PHG 8V1000XP**
	2 845	112,0	25	23	**PHG 8V1120XP**

Section	Dimensions Outside length				Designation
			w	h	
–	mm	in.	mm		–
8V XP	2 997	118,0	25	23	**PHG 8V1180XP**
	3 175	125,0	25	23	**PHG 8V1250XP**
	3 353	132,0	25	23	**PHG 8V1320XP**
	3 556	140,0	25	23	**PHG 8V1400XP**
	3 810	150,0	25	23	**PHG 8V1500XP**
	4 064	160,0	25	23	**PHG 8V1600XP**
	4 318	170,0	25	23	**PHG 8V1700XP**
	4 572	180,0	25	23	**PHG 8V1800XP**
	4 826	190,0	25	23	**PHG 8V1900XP**
	5 080	200,0	25	23	**PHG 8V2000XP**
	5 385	212,0	25	23	**PHG 8V2120XP**
	5 690	224,0	25	23	**PHG 8V2240XP**
	5 994	236,0	25	23	**PHG 8V2360XP**
	6 350	250,0	25	23	**PHG 8V2500XP**
	6 731	265,0	25	23	**PHG 8V2650XP**
	7 112	280,0	25	23	**PHG 8V2800XP**
	7 620	300,0	25	23	**PHG 8V3000XP**
	8 001	315,0	25	23	**PHG 8V3150XP**
	8 509	335,0	25	23	**PHG 8V3350XP**
	9 017	355,0	25	23	**PHG 8V3550XP**
	9 525	375,0	25	23	**PHG 8V3750XP**
	10 160	400,0	25	23	**PHG 8V4000XP**
	10 795	425,0	25	23	**PHG 8V4250XP**
	11 430	450,0	25	23	**PHG 8V4500XP**
	12 065	475,0	25	23	**PHG 8V4750XP**

Non-standard lengths are also available.

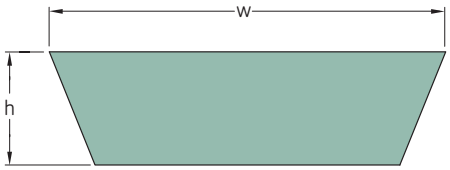

Section	Number of ribs	Dimensions Pitch length		Inside length	w	h	Designation
–	–	mm	in.	mm			–
VS	**1**	496	19,53	476	17	5	**PHG VS17X5X476**
		556	21,89	536	17	5	**PHG VS17X5X536**
		590	23,23	570	17	5	**PHG VS17X5X570**
		626	24,65	606	17	5	**PHG VS17X5X606**
		796	31,34	776	17	5	**PHG VS17X5X776**
		620	24,41	600	21	6	**PHG VS21X6X600**
		630	24,80	610	21	6	**PHG VS21X6X610**
		695	27,36	675	21	6	**PHG VS21X6X675**
		790	31,10	770	21	6	**PHG VS21X6X770**
		556	21,89	525	22	8	**PHG VS22X8X525**
		596	23,46	565	22	8	**PHG VS22X8X565**
		681	26,81	650	22	8	**PHG VS22X8X650**
		731	28,78	700	22	8	**PHG VS22X8X700**
		781	30,75	750	22	8	**PHG VS22X8X750**
		831	32,72	800	22	8	**PHG VS22X8X800**
		881	34,69	850	22	8	**PHG VS22X8X850**
		931	36,65	900	22	8	**PHG VS22X8X900**
		981	38,62	950	22	8	**PHG VS22X8X950**
		1 031	40,59	1 000	22	8	**PHG VS22X8X1000**
		686	27,01	655	26	8	**PHG VS26X8X655**
		703	27,68	672	26	8	**PHG VS26X8X672**
		781	30,75	750	26	8	**PHG VS26X8X750**
		793	31,22	762	26	8	**PHG VS26X8X762**
		831	32,72	800	26	8	**PHG VS26X8X800**
		893	35,16	862	26	8	**PHG VS26X8X862**
		993	39,09	962	26	8	**PHG VS26X8X962**
		631	24,84	600	28	8	**PHG VS28X8X600**
		681	26,81	650	28	8	**PHG VS28X8X650**
		731	28,78	700	28	8	**PHG VS28X8X700**
		781	30,75	750	28	8	**PHG VS28X8X750**
		831	32,72	800	28	8	**PHG VS28X8X800**
		881	34,69	850	28	8	**PHG VS28X8X850**
		931	36,65	900	28	8	**PHG VS28X8X900**
		981	38,62	950	28	8	**PHG VS28X8X950**
		1 031	40,59	1 000	28	8	**PHG VS28X8X1000**
		1 151	45,31	1 120	28	8	**PHG VS28X8X1120**
		692	27,24	650	30	10	**PHG VS30X10X650**
		842	33,15	800	30	10	**PHG VS30X10X800**
		892	35,12	850	30	10	**PHG VS30X10X850**
		942	37,09	900	30	10	**PHG VS30X10X900**
		992	39,06	950	30	10	**PHG VS30X10X950**
		1 042	41,02	1 000	30	10	**PHG VS30X10X1000**
		1 162	45,75	1 120	30	10	**PHG VS30X10X1120**
		1 242	48,90	1 200	30	10	**PHG VS30X10X1200**
		1 542	60,71	1 500	30	10	**PHG VS30X10X1500**
		792	31,18	750	32	10	**PHG VS32X10X750**
		832	32,76	790	32	10	**PHG VS32X10X790**
		862	33,94	820	32	10	**PHG VS32X10X820**
		892	35,12	850	32	10	**PHG VS32X10X850**
		942	37,09	900	32	10	**PHG VS32X10X900**
		992	39,06	992	32	10	**PHG VS32X10X950**
		1 042	41,02	1 000	32	10	**PHG VS32X10X1000**
		1 115	43,90	1 073	32	10	**PHG VS32X10X1073**
		1 162	45,75	1 120	32	10	**PHG VS32X10X1120**
		1 222	48,11	1 180	32	10	**PHG VS32X10X1180**

Section	Number of ribs	Dimensions Pitch length		Inside length	w	h	Designation
–	–	mm	in.	mm			–
VS	**1**	1 242	48,90	1 200	32	10	**PHG VS32X10X1200**
		702	27,64	660	37	10	**PHG VS37X10X660**
		842	33,15	800	37	10	**PHG VS37X10X800**
		892	35,12	850	37	10	**PHG VS37X10X850**
		942	37,09	900	37	10	**PHG VS37X10X900**
		992	39,06	950	37	10	**PHG VS37X10X950**
		1 042	41,02	1 000	37	10	**PHG VS37X10X1000**
		1 102	43,39	1 060	37	10	**PHG VS37X10X1060**
		1 162	45,75	1 120	37	10	**PHG VS37X10X1120**
		1 222	48,11	1 180	37	10	**PHG VS37X10X1180**
		1 442	56,77	1 400	37	10	**PHG VS37X10X1400**
		1 542	60,71	1 500	37	10	**PHG VS37X10X1500**
		1 642	64,65	1 600	37	10	**PHG VS37X10X1600**
		978	38,50	925	41	13	**PHG VS41X13X925**
		1 053	41,46	1 000	41	13	**PHG VS41X13X1000**
		1 093	43,03	1 040	41	13	**PHG VS41X13X1040**
		1 113	43,82	1 060	41	13	**PHG VS41X13X1060**
		1 173	46,18	1 120	41	13	**PHG VS41X13X1120**
		1 233	48,54	1 180	41	13	**PHG VS41X13X1180**
		1 303	51,30	1 250	41	13	**PHG VS41X13X1250**
		1 393	54,84	1 340	41	13	**PHG VS41X13X1340**
		1 493	58,78	1 440	41	13	**PHG VS41X13X1440**
		1 653	65,08	1 600	41	13	**PHG VS41X13X1600**
		1 793	70,59	1 740	41	13	**PHG VS41X13X1740**
		1 053	41,46	1 000	47	13	**PHG VS47X13X1000**
		1 113	43,82	1 060	47	13	**PHG VS47X13X1060**
		1 173	46,18	1 120	47	13	**PHG VS47X13X1120**
		1 233	48,54	1 180	47	13	**PHG VS47X13X1180**
		1 303	51,30	1 250	47	13	**PHG VS47X13X1250**
		1 373	54,06	1 320	47	13	**PHG VS47X13X1320**
		1 453	57,20	1 400	47	13	**PHG VS47X13X1400**
		1 553	61,14	1 500	47	13	**PHG VS47X13X1500**
		1 653	65,08	1 600	47	13	**PHG VS47X13X1600**
		1 753	69,02	1 700	47	13	**PHG VS47X13X1700**
		1 853	72,95	1 800	47	13	**PHG VS47X13X1800**
		1 233	48,54	1 180	52	16	**PHG VS52X16X1180**
		1 303	51,30	1 250	52	16	**PHG VS52X16X1250**
		1 453	57,20	1 400	52	16	**PHG VS52X16X1400**
		1 578	62,13	1 525	52	16	**PHG VS52X16X1525**
		1 653	65,08	1 600	52	16	**PHG VS52X16X1600**
		1 978	77,87	1 925	52	16	**PHG VS52X16X1925**
		1 453	57,20	1 400	55	16	**PHG VS55X16X1400**
		1 553	61,14	1 500	55	16	**PHG VS55X16X1500**
		1 653	65,08	1 600	55	16	**PHG VS55X16X1600**
		1 753	69,02	1 700	55	16	**PHG VS55X16X1700**
		1 853	72,95	1 800	55	16	**PHG VS55X16X1800**
		1 772	69,76	1 706	65	20	**PHG VS65X20X1706**
		1 972	77,64	1 906	65	20	**PHG VS65X20X1906**
		1 666	65,59	1 600	70	18	**PHG VS70X18X1600**
		1 766	69,53	1 700	70	18	**PHG VS70X18X1700**
		1 866	73,46	1 800	70	18	**PHG VS70X18X1800**
		1 966	77,40	1 900	70	18	**PHG VS70X18X1900**
		2 066	81,34	2 000	70	18	**PHG VS70X18X2000**

Non-standard lengths may also be available.

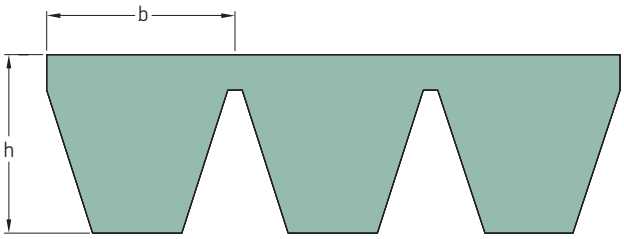

Section	Dimensions Pitch length	b	h	Designation
–	mm			–
SPA	1 250	12,8	12,0	**PHG SPA1250X...**
	1 400	12,8	12,0	**PHG SPA1400X...**
	1 500	12,8	12,0	**PHG SPA1500X...**
	1 600	12,8	12,0	**PHG SPA1600X...**
	1 700	12,8	12,0	**PHG SPA1700X...**
	1 800	12,8	12,0	**PHG SPA1800X...**
	1 900	12,8	12,0	**PHG SPA1900X...**
	2 000	12,8	12,0	**PHG SPA2000X...**
	2 120	12,8	12,0	**PHG SPA2120X...**
	2 240	12,8	12,0	**PHG SPA2240X...**
	2 360	12,8	12,0	**PHG SPA2360X...**
	2 500	12,8	12,0	**PHG SPA2500X...**
	2 650	12,8	12,0	**PHG SPA2650X...**
	2 800	12,8	12,0	**PHG SPA2800X...**
	3 000	12,8	12,0	**PHG SPA3000X...**
	3 150	12,8	12,0	**PHG SPA3150X...**
	3 350	12,8	12,0	**PHG SPA3350X...**
	3 550	12,8	12,0	**PHG SPA3550X...**
	3 750	12,8	12,0	**PHG SPA3750X...**
	4 000	12,8	12,0	**PHG SPA4000X...**
	4 250	12,8	12,0	**PHG SPA4250X...**
	4 500	12,8	12,0	**PHG SPA4500X...**
SPB	2 000	16,5	15,6	**PHG SPB2000X...**
	2 120	16,5	15,6	**PHG SPB2120X...**
	2 240	16,5	15,6	**PHG SPB2240X...**
	2 360	16,5	15,6	**PHG SPB2360X...**
	2 500	16,5	15,6	**PHG SPB2500X...**
	2 650	16,5	15,6	**PHG SPB2650X...**
	2 800	16,5	15,6	**PHG SPB2800X...**
	3 000	16,5	15,6	**PHG SPB3000X...**
	3 150	16,5	15,6	**PHG SPB3150X...**
	3 350	16,5	15,6	**PHG SPB3350X...**
	3 550	16,5	15,6	**PHG SPB3550X...**
	3 750	16,5	15,6	**PHG SPB3750X...**
	4 000	16,5	15,6	**PHG SPB4000X...**
	4 250	16,5	15,6	**PHG SPB4250X...**
	4 500	16,5	15,6	**PHG SPB4500X...**
	4 750	16,5	15,6	**PHG SPB4750X...**
	5 000	16,5	15,6	**PHG SPB5000X...**
	5 300	16,5	15,6	**PHG SPB5300X...**
	5 600	16,5	15,6	**PHG SPB5600X...**
	6 000	16,5	15,6	**PHG SPB6000X...**
	6 300	16,5	15,6	**PHG SPB6300X...**
	6 700	16,5	15,6	**PHG SPB6700X...**
	7 100	16,5	15,6	**PHG SPB7100X...**
	7 500	16,5	15,6	**PHG SPB7500X...**
	8 000	16,5	15,6	**PHG SPB8000X...**
SPC	3 000	22,0	22,6	**PHG SPC3000X...**
	3 150	22,0	22,6	**PHG SPC3150X...**
	3 350	22,0	22,6	**PHG SPC3350X...**
	3 550	22,0	22,6	**PHG SPC3550X...**
	3 750	22,0	22,6	**PHG SPC3750X...**
	4 000	22,0	22,6	**PHG SPC4000X...**
	4 250	22,0	22,6	**PHG SPC4250X...**

Section	Dimensions Pitch length	b	h	Designation
–	mm			–
SPC	4 500	22,0	22,6	**PHG SPC4500X...**
	4 750	22,0	22,6	**PHG SPC4750X...**
	5 000	22,0	22,6	**PHG SPC5000X...**
	5 300	22,0	22,6	**PHG SPC5300X...**
	5 600	22,0	22,6	**PHG SPC5600X...**
	6 000	22,0	22,6	**PHG SPC6000X...**
	6 300	22,0	22,6	**PHG SPC6300X...**
	6 700	22,0	22,6	**PHG SPC6700X...**
	7 100	22,0	22,6	**PHG SPC7100X...**
	7 500	22,0	22,6	**PHG SPC7500X...**
	8 000	22,0	22,6	**PHG SPC8000X...**
	8 500	22,0	22,6	**PHG SPC8500X...**
	9 000	22,0	22,6	**PHG SPC9000X...**
	9 500	22,0	22,6	**PHG SPC9500X...**
	10 000	22,0	22,6	**PHG SPC10000X...**
	10 600	22,0	22,6	**PHG SPC10600X...**
	11 200	22,0	22,6	**PHG SPC11200X...**
	11 800	22,0	22,6	**PHG SPC11800X...**
	12 500	22,0	22,6	**PHG SPC12500X...**

Non-standard lengths are also available.
To complete designation, add number of bands. For example PHG SPC8000X4.

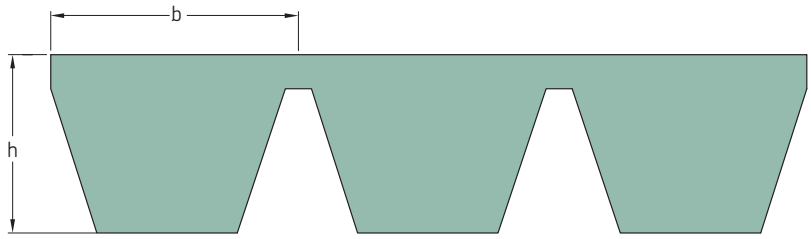

Section	Dimensions Pitch length	Inside length	b	h	Designation
–	mm	in.	mm		–
13/A	1 230	47,0	13	9,9	**PHG A47X...**
	1 330	51,0	13	9,9	**PHG A51X...**
	1 460	56,0	13	9,9	**PHG A56X...**
	1 480	57,0	13	9,9	**PHG A57X...**
	1 530	59,0	13	9,9	**PHG A59X...**
	1 660	64,0	13	9,9	**PHG A64X...**
	1 740	67,0	13	9,9	**PHG A67X...**
	1 840	71,0	13	9,9	**PHG A71X...**
	1 940	75,0	13	9,9	**PHG A75X...**
	2 050	79,0	13	9,9	**PHG A79X...**
	2 270	88,0	13	9,9	**PHG A88X...**
	2 520	98,0	13	9,9	**PHG A98X...**
	2 570	100,0	13	9,9	**PHG A100X...**
	2 680	104,0	13	9,9	**PHG A104X...**
	2 880	112,0	13	9,9	**PHG A112X...**
	3 080	120,0	13	9,9	**PHG A120X...**
	3 290	128,0	13	9,9	**PHG A128X...**
	3 690	144,0	13	9,9	**PHG A144X...**
	4 043	158,0	13	9,9	**PHG A158X...**
	4 270	167,0	13	9,9	**PHG A167X...**
	4 780	187,0	13	9,9	**PHG A187X...**
17/B	1 240	47,0	17	13,0	**PHG B47X...**
	1 340	51,0	17	13,0	**PHG B51X...**
	1 440	55,0	17	13,0	**PHG B55X...**
	1 540	59,0	17	13,0	**PHG B59X...**
	1 590	61,0	17	13,0	**PHG B61X...**
	1 640	63,0	17	13,0	**PHG B63X...**
	1 670	64,0	17	13,0	**PHG B64X...**
	1 740	67,0	17	13,0	**PHG B67X...**
	1 850	71,0	17	13,0	**PHG B71X...**
	1 900	73,0	17	13,0	**PHG B73X...**
	1 950	75,0	17	13,0	**PHG B75X...**
	2 050	79,0	17	13,0	**PHG B79X...**
	2 150	83,0	17	13,0	**PHG B83X...**
	2 280	88,0	17	13,0	**PHG B88X...**
	2 350	91,0	17	13,0	**PHG B91X...**
	2 435	94,5	17	13,0	**PHG B94.5X...**
	2 530	98,0	17	13,0	**PHG B98X...**
	2 630	102,0	17	13,0	**PHG B102X...**
	2 740	106,0	17	13,0	**PHG B106X...**
	2 890	112,0	17	13,0	**PHG B112X...**
	3 040	118,0	17	13,0	**PHG B118X...**
	3 090	120,0	17	13,0	**PHG B120X...**
	3 290	128,0	17	13,0	**PHG B128X...**
	3 400	132,0	17	13,0	**PHG B132X...**
	3 600	140,0	17	13,0	**PHG B140X...**
	3 750	146,0	17	13,0	**PHG B146X...**
	3 800	148,0	17	13,0	**PHG B148X...**
	4 060	158,0	17	13,0	**PHG B158X...**
	4 280	167,0	17	13,0	**PHG B167X...**
	4 540	177,0	17	13,0	**PHG B177X...**
	4 800	187,0	17	13,0	**PHG B187X...**
	5 044	197,0	17	13,0	**PHG B197X...**
	5 340	208,0	17	13,0	**PHG B208X...**

Section	Dimensions Pitch length	Inside length	b	h	Designation
–	mm	in.	mm		–
17/B	5 630	220,0	17	13,0	**PHG B220X...**
22/C	2 340	90,0	22	16,2	**PHG C90X...**
	2 550	98,0	22	16,2	**PHG C98X...**
	2 800	108,0	22	16,2	**PHG C108X...**
	3 100	120,0	22	16,2	**PHG C120X...**
	3 310	128,0	22	16,2	**PHG C128X...**
	3 610	140,0	22	16,2	**PHG C140X...**
	3 760	146,0	22	16,2	**PHG C146X...**
	3 895	151,0	22	16,2	**PHG C151X...**
	4 300	167,0	22	16,2	**PHG C167X...**
	4 560	177,0	22	16,2	**PHG C177X...**
	4 810	187,0	22	16,2	**PHG C187X...**
	5 060	197,0	22	16,2	**PHG C197X...**
	5 340	208,0	22	16,2	**PHG C208X...**
	5 640	220,0	22	16,2	**PHG C220X...**
	6 050	236,0	22	16,2	**PHG C236X...**
	6 360	248,0	22	16,2	**PHG C248X...**
32/D	4 080	158,0	32	22,4	**PHG D158X...**
	4 190	162,0	32	22,4	**PHG D162X...**
	4 470	173,0	32	22,4	**PHG D173X...**
	4 650	180,0	32	22,4	**PHG D180X...**
	5 030	195,0	32	22,4	**PHG D195X...**
	5 400	210,0	32	22,4	**PHG D210X...**
	5 790	225,0	32	22,4	**PHG D225X...**
	6 170	240,0	32	22,4	**PHG D240X...**
	6 560	255,0	32	22,4	**PHG D255X...**
	6 940	270,0	32	22,4	**PHG D270X...**
	7 320	285,0	32	22,4	**PHG D285X...**
	7 700	300,0	32	22,4	**PHG D300X...**
	8 080	315,0	32	22,4	**PHG D315X...**
	8 460	330,0	32	22,4	**PHG D330X...**
	8 840	345,0	32	22,4	**PHG D345X...**
	9 220	360,0	32	22,4	**PHG D360X...**
	9 980	390,0	32	22,4	**PHG D390X...**
	10 740	420,0	32	22,4	**PHG D420X...**
	11 505	450,0	32	22,4	**PHG D450X...**
	12 270	480,0	32	22,4	**PHG D480X...**
	13 790	540,0	32	22,4	**PHG D540X...**

Non-standard lengths are also available.
To complete designation add number of bands. For example PHG D360X6.

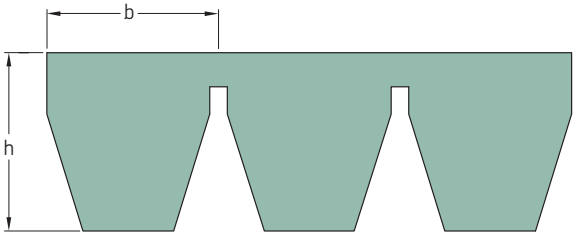

Section	Dimensions Outside length		b	h	Designation
–	mm	in.	mm		–
3V/9J	1 270	50	9	9,9	**PHG 3V500X...**
	1 346	53	9	9,9	**PHG 3V530X...**
	1 422	56	9	9,9	**PHG 3V560X...**
	1 524	60	9	9,9	**PHG 3V600X...**
	1 600	63	9	9,9	**PHG 3V630X...**
	1 702	67	9	9,9	**PHG 3V670X...**
	1 803	71	9	9,9	**PHG 3V710X...**
	1 905	75	9	9,9	**PHG 3V750X...**
	2 032	80	9	9,9	**PHG 3V800X...**
	2 159	85	9	9,9	**PHG 3V850X...**
	2 286	90	9	9,9	**PHG 3V900X...**
	2 413	95	9	9,9	**PHG 3V950X...**
	2 540	100	9	9,9	**PHG 3V1000X...**
	2 692	106	9	9,9	**PHG 3V1060X...**
	2 845	112	9	9,9	**PHG 3V1120X...**
	2 997	118	9	9,9	**PHG 3V1180X...**
	3 175	125	9	9,9	**PHG 3V1250X...**
	3 353	132	9	9,9	**PHG 3V1320X...**
	3 556	140	9	9,9	**PHG 3V1400X...**
5V/15J	1 422	56	15	15,1	**PHG 5V560X...**
	1 524	60	15	15,1	**PHG 5V600X...**
	1 600	63	15	15,1	**PHG 5V630X...**
	1 702	67	15	15,1	**PHG 5V670X...**
	1 803	71	15	15,1	**PHG 5V710X...**
	1 905	75	15	15,1	**PHG 5V750X...**
	2 032	80	15	15,1	**PHG 5V800X...**
	2 159	85	15	15,1	**PHG 5V850X...**
	2 286	90	15	15,1	**PHG 5V900X...**
	2 413	95	15	15,1	**PHG 5V950X...**
	2 540	100	15	15,1	**PHG 5V1000X...**
	2 692	106	15	15,1	**PHG 5V1060X...**
	2 845	112	15	15,1	**PHG 5V1120X...**
	2 997	118	15	15,1	**PHG 5V1180X...**
	3 175	125	15	15,1	**PHG 5V1250X...**
	3 353	132	15	15,1	**PHG 5V1320X...**
	3 556	140	15	15,1	**PHG 5V1400X...**
	3 810	150	15	15,1	**PHG 5V1500X...**
	4 064	160	15	15,1	**PHG 5V1600X...**
	4 318	170	15	15,1	**PHG 5V1700X...**
	4 572	180	15	15,1	**PHG 5V1800X...**
	4 826	190	15	15,1	**PHG 5V1900X...**
	5 080	200	15	15,1	**PHG 5V2000X...**
	5 385	212	15	15,1	**PHG 5V2120X...**
	5 690	224	15	15,1	**PHG 5V2240X...**
	5 994	236	15	15,1	**PHG 5V2360X...**
	6 350	250	15	15,1	**PHG 5V2500X...**
	6 731	265	15	15,1	**PHG 5V2650X...**
	7 112	280	15	15,1	**PHG 5V2800X...**
	7 620	300	15	15,1	**PHG 5V3000X...**
	8 001	315	15	15,1	**PHG 5V3150X...**
	8 509	335	15	15,1	**PHG 5V3350X...**
8V/25J	2 540	100	25	25,5	**PHG 8V1000X...**
	2 692	106	25	25,5	**PHG 8V1060X...**
	2 845	112	25	25,5	**PHG 8V1120X...**
8V/25J	2 997	118	25	25,5	**PHG 8V1180X...**
	3 175	125	25	25,5	**PHG 8V1250X...**
	3 353	132	25	25,5	**PHG 8V1320X...**
	3 556	140	25	25,5	**PHG 8V1400X...**
	3 810	150	25	25,5	**PHG 8V1500X...**
	4 064	160	25	25,5	**PHG 8V1600X...**
	4 318	170	25	25,5	**PHG 8V1700X...**
	4 572	180	25	25,5	**PHG 8V1800X...**
	4 826	190	25	25,5	**PHG 8V1900X...**
	5 080	200	25	25,5	**PHG 8V2000X...**
	5 385	212	25	25,5	**PHG 8V2120X...**
	5 690	224	25	25,5	**PHG 8V2240X...**
	5 994	236	25	25,5	**PHG 8V2360X...**
	6 350	250	25	25,5	**PHG 8V2500X...**
	6 731	265	25	25,5	**PHG 8V2650X...**
	7 112	280	25	25,5	**PHG 8V2800X...**
	7 620	300	25	25,5	**PHG 8V3000X...**
	8 001	315	25	25,5	**PHG 8V3150X...**
	8 509	335	25	25,5	**PHG 8V3350X...**
	9 017	355	25	25,5	**PHG 8V3550X...**
	9 525	375	25	25,5	**PHG 8V3750X...**
	10 160	400	25	25,5	**PHG 8V4000X...**
	10 795	425	25	25,5	**PHG 8V4250X...**
	11 430	450	25	25,5	**PHG 8V4500X...**
	12 065	475	25	25,5	**PHG 8V4750X...**

Non-standard lengths are also available.
To complete designation add number of bands. For example PHG 8V3350X3.

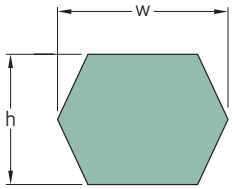

Section	Dimensions Pitch length	Inside length	w	h	Designation
–	mm	in.	mm		–
AA/HAA	2 000	77	13	10	**PHG AA77**
	2 032	78	13	10	**PHG AA78**
	2 370	91	13	10	**PHG AA91**
	2 500	96	13	10	**PHG AA96**
	2 650	102	13	10	**PHG AA102**
	2 667	103	13	10	**PHG AA103**
	2 800	108	13	10	**PHG AA108**
	3 300	128	13	10	**PHG AA128**
	3 920	152	13	10	**PHG AA152**
BB/HBB	1 980	75	17	13	**PHG BB75**
	2 180	83	17	13	**PHG BB83**
	2 300	88	17	13	**PHG BB88**
	2 370	90	17	13	**PHG BB90**
	2 500	95	17	13	**PHG BB95**
	2 540	97	17	13	**PHG BB97**
	2 600	99	17	13	**PHG BB99**
	2 650	101	17	13	**PHG BB101**
	2 740	105	17	13	**PHG BB105**
	2 800	107	17	13	**PHG BB107**
	2 850	109	17	13	**PHG BB109**
	2 920	112	17	13	**PHG BB112**
	3 000	115	17	13	**PHG BB115**
	3 030	116	17	13	**PHG BB116**
	3 150	121	17	13	**PHG BB121**
	3 250	125	17	13	**PHG BB125**
	3 280	126	17	13	**PHG BB126**
	3 325	128	17	13	**PHG BB128**
	3 390	131	17	13	**PHG BB131**
	3 450	133	17	13	**PHG BB133**
	3 500	135	17	13	**PHG BB135**
	3 550	137	17	13	**PHG BB137**
	3 730	144	17	13	**PHG BB144**
	3 750	145	17	13	**PHG BB145**
	4 010	155	17	13	**PHG BB155**
	4 040	156	17	13	**PHG BB156**
	4 200	162	17	13	**PHG BB162**
	4 470	173	17	13	**PHG BB173**
	4 500	174	17	13	**PHG BB174**
	4 750	184	17	13	**PHG BB184**
CC/HCC	2 280	86	22	17	**PHG CC86**
	2 500	94	22	17	**PHG CC94**
	2 800	106	22	17	**PHG CC106**
	3 200	122	22	17	**PHG CC122**
	3 310	126	22	17	**PHG CC126**
	3 765	144	22	17	**PHG CC144**
	4 000	153	22	17	**PHG CC153**
	4 216	162	22	17	**PHG CC162**
	4 300	165	22	17	**PHG CC165**
	4 500	173	22	17	**PHG CC173**
	5 000	193	22	17	**PHG CC193**
	5 300	204	22	17	**PHG CC204**
	5 340	206	22	17	**PHG CC206**
	5 750	224	22	17	**PHG CC224**

Non-standard lengths are also available.

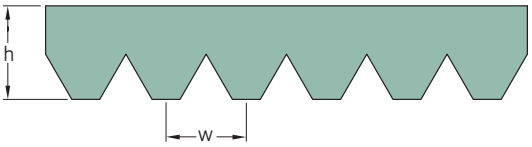

Section	Dimensions Effective length		w	h	Designation
–	mm	in.	mm		–
PH	600	23,6	1,60	2,50	**PHG ...PH600**
	690	27,2	1,60	2,50	**PHG ...PH690**
	760	29,9	1,60	2,50	**PHG ...PH760**
	810	31,9	1,60	2,50	**PHG ...PH810**
	850	33,5	1,60	2,50	**PHG ...PH850**
	865	34,1	1,60	2,50	**PHG ...PH865**
	880	34,6	1,60	2,50	**PHG ...PH880**
	955	37,6	1,60	2,50	**PHG ...PH955**
	965	38,0	1,60	2,50	**PHG ...PH965**
	975	38,4	1,60	2,50	**PHG ...PH975**
	990	39,0	1,60	2,50	**PHG ...PH990**
	1 010	39,8	1,60	2,50	**PHG ...PH1010**
	1 080	42,5	1,60	2,50	**PHG ...PH1080**
	1 090	42,9	1,60	2,50	**PHG ...PH1090**
	1 095	43,1	1,60	2,50	**PHG ...PH1095**
	1 160	45,7	1,60	2,50	**PHG ...PH1160**
	1 200	47,2	1,60	2,50	**PHG ...PH1200**
	1 220	48,0	1,60	2,50	**PHG ...PH1220**
	1 230	48,4	1,60	2,50	**PHG ...PH1230**
	1 240	48,8	1,60	2,50	**PHG ...PH1240**
	1 260	49,6	1,60	2,50	**PHG ...PH1260**
	1 270	50,0	1,60	2,50	**PHG ...PH1270**
	1 285	50,6	1,60	2,50	**PHG ...PH1285**
	1 300	51,2	1,60	2,50	**PHG ...PH1300**
	1 305	51,4	1,60	2,50	**PHG ...PH1305**
	1 320	52,0	1,60	2,50	**PHG ...PH1320**
	1 475	58,1	1,60	2,50	**PHG ...PH1475**
	1 600	63,0	1,60	2,50	**PHG ...PH1600**
PJ	540	21,3	2,34	3,50	**PHG ...PJ540**
	550	21,7	2,34	3,50	**PHG ...PJ550**
	580	22,8	2,34	3,50	**PHG ...PJ580**
	610	24,0	2,34	3,50	**PHG ...PJ610**
	660	26,0	2,34	3,50	**PHG ...PJ660**
	710	28,0	2,34	3,50	**PHG ...PJ710**
	720	28,3	2,34	3,50	**PHG ...PJ720**
	760	29,9	2,34	3,50	**PHG ...PJ760**
	810	31,9	2,34	3,50	**PHG ...PJ810**
	830	32,7	2,34	3,50	**PHG ...PJ830**
	860	33,9	2,34	3,50	**PHG ...PJ860**
	910	35,8	2,34	3,50	**PHG ...PJ910**
	955	37,6	2,34	3,50	**PHG ...PJ955**
	965	38,0	2,34	3,50	**PHG ...PJ965**
	1 010	39,8	2,34	3,50	**PHG ...PJ1010**
	1 090	42,9	2,34	3,50	**PHG ...PJ1090**
	1 105	43,5	2,34	3,50	**PHG ...PJ1105**
	1 110	43,7	2,34	3,50	**PHG ...PJ1110**
	1 120	44,1	2,34	3,50	**PHG ...PJ1120**
	1 130	44,5	2,34	3,50	**PHG ...PJ1130**
	1 150	45,3	2,34	3,50	**PHG ...PJ1150**
	1 160	45,7	2,34	3,50	**PHG ...PJ1160**
	1 190	46,9	2,34	3,50	**PHG ...PJ1190**
	1 200	47,3	2,34	3,50	**PHG ...PJ1200**
	1 220	48,0	2,34	3,50	**PHG ...PJ1220**
	1 240	48,8	2,34	3,50	**PHG ...PJ1240**

Section	Dimensions Effective length		w	h	Designation
–	mm	in.	mm		–
PJ	1 270	50,0	2,34	3,50	**PHG ...PJ1270**
	1 285	50,6	2,34	3,50	**PHG ...PJ1285**
	1 300	51,2	2,34	3,50	**PHG ...PJ1300**
	1 305	51,4	2,34	3,50	**PHG ...PJ1305**
	1 310	51,6	2,34	3,50	**PHG ...PJ1310**
	1 320	52,0	2,34	3,50	**PHG ...PJ1320**
	1 330	52,4	2,34	3,50	**PHG ...PJ1330**
	1 355	53,4	2,34	3,50	**PHG ...PJ1355**
	1 370	53,9	2,34	3,50	**PHG ...PJ1370**
	1 390	54,7	2,34	3,50	**PHG ...PJ1390**
	1 420	55,9	2,34	3,50	**PHG ...PJ1420**
	1 430	56,3	2,34	3,50	**PHG ...PJ1430**
	1 475	58,1	2,34	3,50	**PHG ...PJ1475**
	1 540	60,6	2,34	3,50	**PHG ...PJ1540**
	1 600	63,0	2,34	3,50	**PHG ...PJ1600**
	1 650	65,0	2,34	3,50	**PHG ...PJ1650**
	1 660	65,4	2,34	3,50	**PHG ...PJ1660**
	1 750	68,9	2,34	3,50	**PHG ...PJ1750**
	1 780	70,0	2,34	3,50	**PHG ...PJ1780**
	1 850	72,8	2,34	3,50	**PHG ...PJ1850**
	1 895	74,6	2,34	3,50	**PHG ...PJ1895**
	1 910	75,2	2,34	3,50	**PHG ...PJ1910**
	1 915	75,4	2,34	3,50	**PHG ...PJ1915**
	1 930	76,0	2,34	3,50	**PHG ...PJ1930**
	1 950	76,8	2,34	3,50	**PHG ...PJ1950**
	1 965	77,4	2,34	3,50	**PHG ...PJ1965**
	1 980	78,0	2,34	3,50	**PHG ...PJ1980**
	1 990	78,3	2,34	3,50	**PHG ...PJ1990**
	2 080	81,9	2,34	3,50	**PHG ...PJ2080**
	2 100	82,7	2,34	3,50	**PHG ...PJ2100**
	2 155	84,8	2,34	3,50	**PHG ...PJ2155**
	2 210	87,0	2,34	3,50	**PHG ...PJ2210**
	2 330	91,7	2,34	3,50	**PHG ...PJ2330**
	2 480	97,6	2,34	3,50	**PHG ...PJ2480**
PK	575	22,6	3,56	5,50	**PHG ...PK575**
	600	23,6	3,56	5,50	**PHG ...PK600**
	635	25,0	3,56	5,50	**PHG ...PK635**
	650	25,6	3,56	5,50	**PHG ...PK650**
	665	26,2	3,56	5,50	**PHG ...PK665**
	690	27,2	3,56	5,50	**PHG ...PK690**
	710	28,0	3,56	5,50	**PHG ...PK710**
	740	29,1	3,56	5,50	**PHG ...PK740**
	760	29,9	3,56	5,50	**PHG ...PK760**
	785	30,9	3,56	5,50	**PHG ...PK785**
	790	31,1	3,56	5,50	**PHG ...PK790**
	800	31,5	3,56	5,50	**PHG ...PK800**
	820	32,3	3,56	5,50	**PHG ...PK820**
	840	33,1	3,56	5,50	**PHG ...PK840**
	850	33,5	3,56	5,50	**PHG ...PK850**
	865	34,1	3,56	5,50	**PHG ...PK865**
	870	34,3	3,56	5,50	**PHG ...PK870**
	885	34,8	3,56	5,50	**PHG ...PK885**
	890	35,0	3,56	5,50	**PHG ...PK890**
	900	35,4	3,56	5,50	**PHG ...PK900**

Non-standard lengths are also available.
To complete designation add number of ribs. For example PHG 4PJ1320.

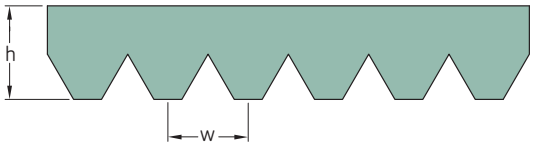

Section	Dimensions Effective length		w	h	Designation
–	mm	in.	mm		–
PK	910	35,8	3,56	5,50	**PHG ...PK910**
	925	36,4	3,56	5,50	**PHG ...PK925**
	940	37,0	3,56	5,50	**PHG ...PK940**
	945	37,2	3,56	5,50	**PHG ...PK945**
	950	37,4	3,56	5,50	**PHG ...PK950**
	960	37,8	3,56	5,50	**PHG ...PK960**
	970	38,2	3,56	5,50	**PHG ...PK970**
	980	38,6	3,56	5,50	**PHG ...PK980**
	990	39,0	3,56	5,50	**PHG ...PK990**
	1 000	39,4	3,56	5,50	**PHG ...PK1000**
	1 010	39,8	3,56	5,50	**PHG ...PK1010**
	1 015	40,0	3,56	5,50	**PHG ...PK1015**
	1 020	40,2	3,56	5,50	**PHG ...PK1020**
	1 040	40,9	3,56	5,50	**PHG ...PK1040**
	1 050	41,3	3,56	5,50	**PHG ...PK1050**
	1 060	41,7	3,56	5,50	**PHG ...PK1060**
	1 075	42,3	3,56	5,50	**PHG ...PK1075**
	1 080	42,5	3,56	5,50	**PHG ...PK1080**
	1 090	42,9	3,56	5,50	**PHG ...PK1090**
	1 100	43,3	3,56	5,50	**PHG ...PK1100**
	1 120	44,1	3,56	5,50	**PHG ...PK1120**
	1 130	44,5	3,56	5,50	**PHG ...PK1130**
	1 140	44,9	3,56	5,50	**PHG ...PK1140**
	1 150	45,3	3,56	5,50	**PHG ...PK1150**
	1 160	45,7	3,56	5,50	**PHG ...PK1160**
	1 170	46,1	3,56	5,50	**PHG ...PK1170**
	1 180	46,5	3,56	5,50	**PHG ...PK1180**
	1 190	46,9	3,56	5,50	**PHG ...PK1190**
	1 200	47,3	3,56	5,50	**PHG ...PK1200**
	1 220	48,0	3,56	5,50	**PHG ...PK1220**
	1 240	48,8	3,56	5,50	**PHG ...PK1240**
	1 260	49,6	3,56	5,50	**PHG ...PK1260**
	1 280	50,4	3,56	5,50	**PHG ...PK1280**
	1 300	51,2	3,56	5,50	**PHG ...PK1300**
	1 320	52,0	3,56	5,50	**PHG ...PK1320**
	1 340	52,8	3,56	5,50	**PHG ...PK1340**
	1 360	53,5	3,56	5,50	**PHG ...PK1360**
	1 380	54,3	3,56	5,50	**PHG ...PK1380**
	1 400	55,1	3,56	5,50	**PHG ...PK1400**
	1 420	55,9	3,56	5,50	**PHG ...PK1420**
	1 440	56,7	3,56	5,50	**PHG ...PK1440**
	1 460	57,5	3,56	5,50	**PHG ...PK1460**
	1 480	58,3	3,56	5,50	**PHG ...PK1480**
	1 500	59,1	3,56	5,50	**PHG ...PK1500**
	1 520	59,8	3,56	5,50	**PHG ...PK1520**
	1 540	60,6	3,56	5,50	**PHG ...PK1540**
	1 560	61,4	3,56	5,50	**PHG ...PK1560**
	1 580	62,2	3,56	5,50	**PHG ...PK1580**
	1 600	63,0	3,56	5,50	**PHG ...PK1600**
	1 620	63,8	3,56	5,50	**PHG ...PK1620**
	1 640	64,6	3,56	5,50	**PHG ...PK1640**
	1 660	65,4	3,56	5,50	**PHG ...PK1660**
	1 680	66,1	3,56	5,50	**PHG ...PK1680**
	1 690	66,5	3,56	5,50	**PHG ...PK1690**
	1 710	67,3	3,56	5,50	**PHG ...PK1710**

Section	Dimensions Effective length		w	h	Designation
–	mm	in.	mm		–
PK	1 720	67,7	3,56	5,50	**PHG ...PK1720**
	1 770	69,7	3,56	5,50	**PHG ...PK1770**
	1 780	70,1	3,56	5,50	**PHG ...PK1780**
	1 800	70,9	3,56	5,50	**PHG ...PK1800**
	1 830	72,0	3,56	5,50	**PHG ...PK1830**
	1 865	73,4	3,56	5,50	**PHG ...PK1865**
	1 880	74,0	3,56	5,50	**PHG ...PK1880**
	1 900	74,8	3,56	5,50	**PHG ...PK1900**
	1 950	76,8	3,56	5,50	**PHG ...PK1950**
	1 980	78,0	3,56	5,50	**PHG ...PK1980**
	2 020	79,5	3,56	5,50	**PHG ...PK2020**
	2 080	81,9	3,56	5,50	**PHG ...PK2080**
	2 100	82,7	3,56	5,50	**PHG ...PK2100**
	2 110	83,1	3,56	5,50	**PHG ...PK2110**
	2 130	83,9	3,56	5,50	**PHG ...PK2130**
	2 210	87,0	3,56	5,50	**PHG ...PK2210**
	2 230	87,8	3,56	5,50	**PHG ...PK2230**
	2 250	88,6	3,56	5,50	**PHG ...PK2250**
	2 300	90,6	3,56	5,50	**PHG ...PK2300**
	2 330	91,7	3,56	5,50	**PHG ...PK2330**
	2 420	95,3	3,56	5,50	**PHG ...PK2420**
PL	1 075	42,5	4,70	7,00	**PHG ...PL1075**
	1 270	50,0	4,70	7,00	**PHG ...PL1270**
	1 333	52,5	4,70	7,00	**PHG ...PL1333**
	1 371	54,0	4,70	7,00	**PHG ...PL1371**
	1 397	55,0	4,70	7,00	**PHG ...PL1397**
	1 422	56,0	4,70	7,00	**PHG ...PL1422**
	1 562	61,5	4,70	7,00	**PHG ...PL1562**
	1 613	63,5	4,70	7,00	**PHG ...PL1613**
	1 664	65,5	4,70	7,00	**PHG ...PL1664**
	1 715	67,5	4,70	7,00	**PHG ...PL1715**
	1 764	69,5	4,70	7,00	**PHG ...PL1764**
	1 803	71,0	4,70	7,00	**PHG ...PL1803**
	1 841	72,5	4,70	7,00	**PHG ...PL1841**
	1 943	76,5	4,70	7,00	**PHG ...PL1943**
	1 981	78,0	4,70	7,00	**PHG ...PL1981**
	2 020	79,5	4,70	7,00	**PHG ...PL2020**
	2 070	81,5	4,70	7,00	**PHG ...PL2070**
	2 096	82,5	4,70	7,00	**PHG ...PL2096**
	2 134	84,0	4,70	7,00	**PHG ...PL2134**
	2 197	86,5	4,70	7,00	**PHG ...PL2197**
	2 235	88,0	4,70	7,00	**PHG ...PL2235**
	2 324	91,5	4,70	7,00	**PHG ...PL2324**
	2 362	93,0	4,70	7,00	**PHG ...PL2362**
	2 476	97,5	4,70	7,00	**PHG ...PL2476**
	2 515	99,0	4,70	7,00	**PHG ...PL2515**
	2 705	106,5	4,70	7,00	**PHG ...PL2705**
	2 743	108,0	4,70	7,00	**PHG ...PL2743**
	2 845	112,0	4,70	7,00	**PHG ...PL2845**
	2 895	114,0	4,70	7,00	**PHG ...PL2895**
	2 921	115,0	4,70	7,00	**PHG ...PL2921**
	2 997	116,0	4,70	7,00	**PHG ...PL2997**
	3 086	121,5	4,70	7,00	**PHG ...PL3086**
	3 124	123,0	4,70	7,00	**PHG ...PL3124**

Non-standard lengths are also available.
To complete designation add number of ribs. For example PHG 4PJ1320.

Section	Dimensions Effective length				Designation
			w	h	
–	mm	in.	mm		–
PL	3 289	129,5	4,70	7,00	**PHG ...PL3289**
	3 327	131,0	4,70	7,00	**PHG ...PL3327**
	3 492	137,5	4,70	7,00	**PHG ...PL3492**
	3 696	145,5	4,70	7,00	**PHG ...PL3696**
	4 051	159,5	4,70	7,00	**PHG ...PL4051**
PM	2 693	106,0	9,40	13,00	**PHG ...PM2693**
	2 832	111,5	9,40	13,00	**PHG ...PM2832**
	2 921	115,0	9,40	13,00	**PHG ...PM2921**
	3 010	118,5	9,40	13,00	**PHG ...PM3010**
	3 124	123,0	9,40	13,00	**PHG ...PM3124**
	3 327	131,0	9,40	13,00	**PHG ...PM3327**
	3 531	139,0	9,40	13,00	**PHG ...PM3531**
	3 734	147,0	9,40	13,00	**PHG ...PM3734**
	4 089	161,0	9,40	13,00	**PHG ...PM4089**
	4 191	165,0	9,40	13,00	**PHG ...PM4191**
	4 470	176,0	9,40	13,00	**PHG ...PM4470**
	4 648	183,0	9,40	13,00	**PHG ...PM4648**

Non-standard lengths are also available.
To complete designation add number of ribs. For example PHG 4PJ1320.

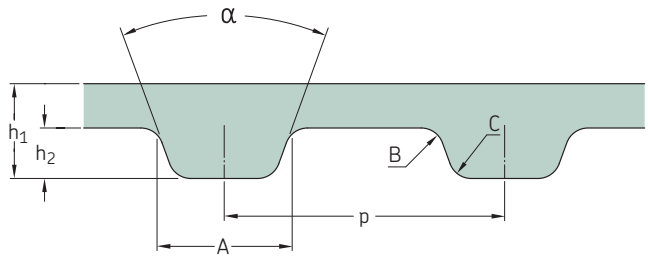

Section	Number of teeth	Dimensions Pitch length		h_1	h_2	A	B	p	C	α	Designation
–	–	in.	mm							°	–
MXL	26	2,08	52,83	1,14	0,51	1,14	0,13	2,032	0,13	40	**PHG 208-MXL-...**
	27	2,16	54,86	1,14	0,51	1,14	0,13	2,032	0,13	40	**PHG 216-MXL-...**
	33	2,64	67,06	1,14	0,51	1,14	0,13	2,032	0,13	40	**PHG 264-MXL-...**
	35	2,80	71,12	1,14	0,51	1,14	0,13	2,032	0,13	40	**PHG 280-MXL-...**
	40	3,20	81,28	1,14	0,51	1,14	0,13	2,032	0,13	40	**PHG 320-MXL-...**
	43	3,44	87,38	1,14	0,51	1,14	0,13	2,032	0,13	40	**PHG 344-MXL-...**
	45	3,60	91,44	1,14	0,51	1,14	0,13	2,032	0,13	40	**PHG 360-MXL-...**
	49	3,92	99,57	1,14	0,51	1,14	0,13	2,032	0,13	40	**PHG 392-MXL-...**
	50	4,00	101,60	1,14	0,51	1,14	0,13	2,032	0,13	40	**PHG 400-MXL-...**
	51	4,08	103,63	1,14	0,51	1,14	0,13	2,032	0,13	40	**PHG 408-MXL-...**
	52	4,16	105,66	1,14	0,51	1,14	0,13	2,032	0,13	40	**PHG 416-MXL-...**
	53	4,24	107,70	1,14	0,51	1,14	0,13	2,032	0,13	40	**PHG 424-MXL-...**
	54	4,32	109,73	1,14	0,51	1,14	0,13	2,032	0,13	40	**PHG 432-MXL-...**
	55	4,40	111,76	1,14	0,51	1,14	0,13	2,032	0,13	40	**PHG 440-MXL-...**
	56	4,48	113,79	1,14	0,51	1,14	0,13	2,032	0,13	40	**PHG 448-MXL-...**
	58	4,64	117,86	1,14	0,51	1,14	0,13	2,032	0,13	40	**PHG 464-MXL-...**
	59	4,72	119,89	1,14	0,51	1,14	0,13	2,032	0,13	40	**PHG 472-MXL-...**
	60	4,80	121,92	1,14	0,51	1,14	0,13	2,032	0,13	40	**PHG 480-MXL-...**
	61	4,88	123,95	1,14	0,51	1,14	0,13	2,032	0,13	40	**PHG 488-MXL-...**
	62	4,96	125,98	1,14	0,51	1,14	0,13	2,032	0,13	40	**PHG 496-MXL-...**
	63	5,04	128,02	1,14	0,51	1,14	0,13	2,032	0,13	40	**PHG 504-MXL-...**
	64	5,12	130,05	1,14	0,51	1,14	0,13	2,032	0,13	40	**PHG 512-MXL-...**
	65	5,20	132,08	1,14	0,51	1,14	0,13	2,032	0,13	40	**PHG 520-MXL-...**
	66	5,28	134,11	1,14	0,51	1,14	0,13	2,032	0,13	40	**PHG 528-MXL-...**
	67	5,36	136,14	1,14	0,51	1,14	0,13	2,032	0,13	40	**PHG 536-MXL-...**
	68	5,44	138,18	1,14	0,51	1,14	0,13	2,032	0,13	40	**PHG 544-MXL-...**
	70	5,60	142,24	1,14	0,51	1,14	0,13	2,032	0,13	40	**PHG 560-MXL-...**
	71	5,68	144,27	1,14	0,51	1,14	0,13	2,032	0,13	40	**PHG 568-MXL-...**
	72	5,76	146,30	1,14	0,51	1,14	0,13	2,032	0,13	40	**PHG 576-MXL-...**
	73	5,84	148,34	1,14	0,51	1,14	0,13	2,032	0,13	40	**PHG 584-MXL-...**
	75	6,00	152,40	1,14	0,51	1,14	0,13	2,032	0,13	40	**PHG 600-MXL-...**
	76	6,08	154,43	1,14	0,51	1,14	0,13	2,032	0,13	40	**PHG 608-MXL-...**
	77	6,16	156,46	1,14	0,51	1,14	0,13	2,032	0,13	40	**PHG 616-MXL-...**
	78	6,24	158,50	1,14	0,51	1,14	0,13	2,032	0,13	40	**PHG 624-MXL-...**
	79	6,32	160,53	1,14	0,51	1,14	0,13	2,032	0,13	40	**PHG 632-MXL-...**
	80	6,40	162,56	1,14	0,51	1,14	0,13	2,032	0,13	40	**PHG 640-MXL-...**
	82	6,56	166,62	1,14	0,51	1,14	0,13	2,032	0,13	40	**PHG 656-MXL-...**
	83	6,64	168,66	1,14	0,51	1,14	0,13	2,032	0,13	40	**PHG 664-MXL-...**
	85	6,80	172,72	1,14	0,51	1,14	0,13	2,032	0,13	40	**PHG 680-MXL-...**
	87	6,96	176,78	1,14	0,51	1,14	0,13	2,032	0,13	40	**PHG 696-MXL-...**
	88	7,04	178,82	1,14	0,51	1,14	0,13	2,032	0,13	40	**PHG 704-MXL-...**
	89	7,12	180,85	1,14	0,51	1,14	0,13	2,032	0,13	40	**PHG 712-MXL-...**
	90	7,20	182,88	1,14	0,51	1,14	0,13	2,032	0,13	40	**PHG 720-MXL-...**
	92	7,36	186,94	1,14	0,51	1,14	0,13	2,032	0,13	40	**PHG 736-MXL-...**
	94	7,52	191,01	1,14	0,51	1,14	0,13	2,032	0,13	40	**PHG 752-MXL-...**
	95	7,60	193,04	1,14	0,51	1,14	0,13	2,032	0,13	40	**PHG 760-MXL-...**
	97	7,76	197,10	1,14	0,51	1,14	0,13	2,032	0,13	40	**PHG 776-MXL-...**
	98	7,84	199,14	1,14	0,51	1,14	0,13	2,032	0,13	40	**PHG 784-MXL-...**
	100	8,00	203,20	1,14	0,51	1,14	0,13	2,032	0,13	40	**PHG 800-MXL-...**
	102	8,16	207,26	1,14	0,51	1,14	0,13	2,032	0,13	40	**PHG 816-MXL-...**
	103	8,24	209,30	1,14	0,51	1,14	0,13	2,032	0,13	40	**PHG 824-MXL-...**
	105	8,40	213,36	1,14	0,51	1,14	0,13	2,032	0,13	40	**PHG 840-MXL-...**
	106	8,48	215,39	1,14	0,51	1,14	0,13	2,032	0,13	40	**PHG 848-MXL-...**
	108	8,64	219,46	1,14	0,51	1,14	0,13	2,032	0,13	40	**PHG 864-MXL-...**
	109	8,72	221,49	1,14	0,51	1,14	0,13	2,032	0,13	40	**PHG 872-MXL-...**

Non-standard lengths may also be available.
To complete designation, add three digits for belt width in 1/100ths of an inch; e.g. for a 1/4" width add 025 or for a 3/8" width add 037.
Full sleeves are available in various widths. Please contact your SKF Authorized Distributor.

Section	Number of teeth	Dimensions Pitch length		h_1	h_2	A	B	p	C	α	Designation
–	–	in.	mm							°	–
MXL	110	8,80	223,52	1,14	0,51	1,14	0,13	2,032	0,13	40	**PHG 880-MXL-...**
	112	8,96	227,58	1,14	0,51	1,14	0,13	2,032	0,13	40	**PHG 896-MXL-...**
	113	9,04	229,62	1,14	0,51	1,14	0,13	2,032	0,13	40	**PHG 904-MXL-...**
	114	9,12	231,65	1,14	0,51	1,14	0,13	2,032	0,13	40	**PHG 912-MXL-...**
	115	9,20	233,68	1,14	0,51	1,14	0,13	2,032	0,13	40	**PHG 920-MXL-...**
	116	9,28	235,71	1,14	0,51	1,14	0,13	2,032	0,13	40	**PHG 928-MXL-...**
	118	9,44	239,78	1,14	0,51	1,14	0,13	2,032	0,13	40	**PHG 944-MXL-...**
	120	9,60	243,84	1,14	0,51	1,14	0,13	2,032	0,13	40	**PHG 960-MXL-...**
	122	9,76	247,90	1,14	0,51	1,14	0,13	2,032	0,13	40	**PHG 976-MXL-...**
	123	9,84	249,94	1,14	0,51	1,14	0,13	2,032	0,13	40	**PHG 984-MXL-...**
	125	10,00	254,00	1,14	0,51	1,14	0,13	2,032	0,13	40	**PHG 1000-MXL-...**
	126	10,08	256,03	1,14	0,51	1,14	0,13	2,032	0,13	40	**PHG 1008-MXL-...**
	132	10,56	268,22	1,14	0,51	1,14	0,13	2,032	0,13	40	**PHG 1056-MXL-...**
	133	10,64	270,26	1,14	0,51	1,14	0,13	2,032	0,13	40	**PHG 1064-MXL-...**
	135	10,80	274,32	1,14	0,51	1,14	0,13	2,032	0,13	40	**PHG 1080-MXL-...**
	136	10,88	276,35	1,14	0,51	1,14	0,13	2,032	0,13	40	**PHG 1088-MXL-...**
	137	10,96	278,38	1,14	0,51	1,14	0,13	2,032	0,13	40	**PHG 1096-MXL-...**
	138	11,04	280,42	1,14	0,51	1,14	0,13	2,032	0,13	40	**PHG 1104-MXL-...**
	139	11,12	282,45	1,14	0,51	1,14	0,13	2,032	0,13	40	**PHG 1112-MXL-...**
	140	11,20	284,48	1,14	0,51	1,14	0,13	2,032	0,13	40	**PHG 1120-MXL-...**
	142	11,36	288,54	1,14	0,51	1,14	0,13	2,032	0,13	40	**PHG 1136-MXL-...**
	144	11,52	292,61	1,14	0,51	1,14	0,13	2,032	0,13	40	**PHG 1152-MXL-...**
	145	11,60	294,64	1,14	0,51	1,14	0,13	2,032	0,13	40	**PHG 1160-MXL-...**
	148	11,84	300,74	1,14	0,51	1,14	0,13	2,032	0,13	40	**PHG 1184-MXL-...**
	149	11,92	302,77	1,14	0,51	1,14	0,13	2,032	0,13	40	**PHG 1192-MXL-...**
	150	12,00	304,80	1,14	0,51	1,14	0,13	2,032	0,13	40	**PHG 1200-MXL-...**
	152	12,16	308,86	1,14	0,51	1,14	0,13	2,032	0,13	40	**PHG 1216-MXL-...**
	153	12,24	310,90	1,14	0,51	1,14	0,13	2,032	0,13	40	**PHG 1224-MXL-...**
	154	12,32	312,93	1,14	0,51	1,14	0,13	2,032	0,13	40	**PHG 1232-MXL-...**
	155	12,40	314,96	1,14	0,51	1,14	0,13	2,032	0,13	40	**PHG 1240-MXL-...**
	156	12,48	316,99	1,14	0,51	1,14	0,13	2,032	0,13	40	**PHG 1248-MXL-...**
	158	12,64	321,06	1,14	0,51	1,14	0,13	2,032	0,13	40	**PHG 1264-MXL-...**
	160	12,80	325,12	1,14	0,51	1,14	0,13	2,032	0,13	40	**PHG 1280-MXL-...**
	162	12,96	329,18	1,14	0,51	1,14	0,13	2,032	0,13	40	**PHG 1296-MXL-...**
	165	13,20	335,28	1,14	0,51	1,14	0,13	2,032	0,13	40	**PHG 1320-MXL-...**
	168	13,44	341,38	1,14	0,51	1,14	0,13	2,032	0,13	40	**PHG 1344-MXL-...**
	170	13,60	345,44	1,14	0,51	1,14	0,13	2,032	0,13	40	**PHG 1360-MXL-...**
	175	14,00	355,60	1,14	0,51	1,14	0,13	2,032	0,13	40	**PHG 1400-MXL-...**
	180	14,40	365,76	1,14	0,51	1,14	0,13	2,032	0,13	40	**PHG 1440-MXL-...**
	184	14,72	373,89	1,14	0,51	1,14	0,13	2,032	0,13	40	**PHG 1472-MXL-...**
	190	15,20	386,08	1,14	0,51	1,14	0,13	2,032	0,13	40	**PHG 1520-MXL-...**
	192	15,36	390,14	1,14	0,51	1,14	0,13	2,032	0,13	40	**PHG 1536-MXL-...**
	194	15,52	394,21	1,14	0,51	1,14	0,13	2,032	0,13	40	**PHG 1552-MXL-...**
	195	15,60	396,24	1,14	0,51	1,14	0,13	2,032	0,13	40	**PHG 1560-MXL-...**
	200	16,00	406,40	1,14	0,51	1,14	0,13	2,032	0,13	40	**PHG 1600-MXL-...**
	206	16,48	418,59	1,14	0,51	1,14	0,13	2,032	0,13	40	**PHG 1648-MXL-...**
	210	16,80	426,72	1,14	0,51	1,14	0,13	2,032	0,13	40	**PHG 1680-MXL-...**
	212	16,96	430,78	1,14	0,51	1,14	0,13	2,032	0,13	40	**PHG 1696-MXL-...**
	221	17,68	449,07	1,14	0,51	1,14	0,13	2,032	0,13	40	**PHG 1768-MXL-...**
	225	18,00	457,20	1,14	0,51	1,14	0,13	2,032	0,13	40	**PHG 1800-MXL-...**
	228	18,20	462,28	1,14	0,51	1,14	0,13	2,032	0,13	40	**PHG 1820-MXL-...**
	232	18,56	471,42	1,14	0,51	1,14	0,13	2,032	0,13	40	**PHG 1856-MXL-...**
	236	18,88	479,55	1,14	0,51	1,14	0,13	2,032	0,13	40	**PHG 1888-MXL-...**
	239	19,12	485,65	1,14	0,51	1,14	0,13	2,032	0,13	40	**PHG 1912-MXL-...**
	240	19,20	487,68	1,14	0,51	1,14	0,13	2,032	0,13	40	**PHG 1920-MXL-...**
	249	19,92	505,97	1,14	0,51	1,14	0,13	2,032	0,13	40	**PHG 1992-MXL-...**
	250	20,00	508,00	1,14	0,51	1,14	0,13	2,032	0,13	40	**PHG 2000-MXL-...**
	256	20,48	520,19	1,14	0,51	1,14	0,13	2,032	0,13	40	**PHG 2048-MXL-...**
	265	21,20	538,48	1,14	0,51	1,14	0,13	2,032	0,13	40	**PHG 2120-MXL-...**
	273	21,84	554,74	1,14	0,51	1,14	0,13	2,032	0,13	40	**PHG 2184-MXL-...**
	276	22,08	560,83	1,14	0,51	1,14	0,13	2,032	0,13	40	**PHG 2208-MXL-...**
	280	22,40	568,96	1,14	0,51	1,14	0,13	2,032	0,13	40	**PHG 2240-MXL-...**
	290	23,20	589,28	1,14	0,51	1,14	0,13	2,032	0,13	40	**PHG 2320-MXL-...**
	295	23,60	599,44	1,14	0,51	1,14	0,13	2,032	0,13	40	**PHG 2360-MXL-...**
	298	23,84	605,54	1,14	0,51	1,14	0,13	2,032	0,13	40	**PHG 2384-MXL-...**
	300	24,00	609,60	1,14	0,51	1,14	0,13	2,032	0,13	40	**PHG 2400-MXL-...**
	305	24,40	619,76	1,14	0,51	1,14	0,13	2,032	0,13	40	**PHG 2440-MXL-...**
	312	24,96	633,98	1,14	0,51	1,14	0,13	2,032	0,13	40	**PHG 2496-MXL-...**
	318	25,44	646,18	1,14	0,51	1,14	0,13	2,032	0,13	40	**PHG 2544-MXL-...**
	320	25,60	650,24	1,14	0,51	1,14	0,13	2,032	0,13	40	**PHG 2560-MXL-...**
	328	26,24	666,50	1,14	0,51	1,14	0,13	2,032	0,13	40	**PHG 2624-MXL-...**
	336	26,88	682,75	1,14	0,51	1,14	0,13	2,032	0,13	40	**PHG 2688-MXL-...**
	347	27,76	705,10	1,14	0,51	1,14	0,13	2,032	0,13	40	**PHG 2776-MXL-...**
	362	28,96	735,58	1,14	0,51	1,14	0,13	2,032	0,13	40	**PHG 2896-MXL-...**
	378	30,24	768,10	1,14	0,51	1,14	0,13	2,032	0,13	40	**PHG 3024-MXL-...**
	400	32,00	812,80	1,14	0,51	1,14	0,13	2,032	0,13	40	**PHG 3200-MXL-...**

Non-standard lengths may also be available.
To complete designation, add three digits for belt width in 1/100ths of an inch; e.g. for a 1/4" width add 025 or for a 3/8" width add 037.
Full sleeves are available in various widths. Please contact your SKF Authorized Distributor.

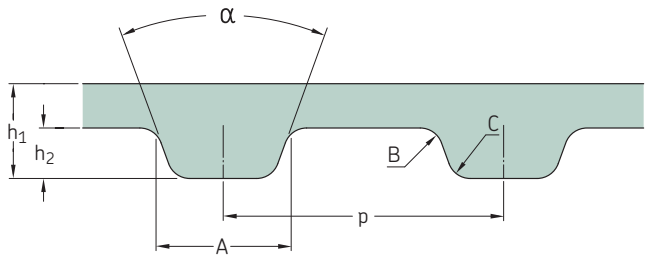

Section	Number of teeth	Dimensions Pitch length									Designation
				h_1	h_2	A	B	p	C	α	
–	–	in.	mm							°	–
MXL	408	32,64	829,06	1,14	0,51	1,14	0,13	2,032	0,13	40	**PHG 3264-MXL-...**
	448	35,84	910,34	1,14	0,51	1,14	0,13	2,032	0,13	40	**PHG 3584-MXL-...**
	463	37,04	940,82	1,14	0,51	1,14	0,13	2,032	0,13	40	**PHG 3704-MXL-...**
	472	37,76	959,10	1,14	0,51	1,14	0,13	2,032	0,13	40	**PHG 3776-MXL-...**
	504	40,32	1 024,13	1,14	0,51	1,14	0,13	2,032	0,13	40	**PHG 4032-MXL-...**
	522	41,76	1 060,70	1,14	0,51	1,14	0,13	2,032	0,13	40	**PHG 4176-MXL-...**
	531	42,48	1 078,99	1,14	0,51	1,14	0,13	2,032	0,13	40	**PHG 4248-MXL-...**
	546	43,68	1 109,47	1,14	0,51	1,14	0,13	2,032	0,13	40	**PHG 4368-MXL-...**
	548	43,84	1 113,54	1,14	0,51	1,14	0,13	2,032	0,13	40	**PHG 4384-MXL-...**
	570	45,60	1 158,24	1,14	0,51	1,14	0,13	2,032	0,13	40	**PHG 4560-MXL-...**
	583	46,64	1 184,66	1,14	0,51	1,14	0,13	2,032	0,13	40	**PHG 4664-MXL-...**
	600	48,00	1 219,20	1,14	0,51	1,14	0,13	2,032	0,13	40	**PHG 4800-MXL-...**
	648	51,84	1 316,74	1,14	0,51	1,14	0,13	2,032	0,13	40	**PHG 5184-MXL-...**
	680	54,40	1 381,76	1,14	0,51	1,14	0,13	2,032	0,13	40	**PHG 5440-MXL-...**
	750	60,00	1 524,00	1,14	0,51	1,14	0,13	2,032	0,13	40	**PHG 6000-MXL-...**
	760	60,80	1 544,32	1,14	0,51	1,14	0,13	2,032	0,13	40	**PHG 6080-MXL-...**
	800	64,00	1 625,60	1,14	0,51	1,14	0,13	2,032	0,13	40	**PHG 6400-MXL-...**
	955	76,40	1 940,56	1,14	0,51	1,14	0,13	2,032	0,13	40	**PHG 7640-MXL-...**
	957	76,56	1 944,62	1,14	0,51	1,14	0,13	2,032	0,13	40	**PHG 7656-MXL-...**
	1 012	80,96	2 056,38	1,14	0,51	1,14	0,13	2,032	0,13	40	**PHG 8096-MXL-...**
	1 030	82,40	2 092,96	1,14	0,51	1,14	0,13	2,032	0,13	40	**PHG 8240-MXL-...**
	1 060	84,80	2 153,92	1,14	0,51	1,14	0,13	2,032	0,13	40	**PHG 8480-MXL-...**
	1 137	90,96	2 310,38	1,14	0,51	1,14	0,13	2,032	0,13	40	**PHG 9096-MXL-...**
	1 250	100,00	2 540,00	1,14	0,51	1,14	0,13	2,032	0,13	40	**PHG 10000-MXL-...**
	1 426	114,12	2 898,65	1,14	0,51	1,14	0,13	2,032	0,13	40	**PHG 11412-MXL-...**
	1 463	117,00	2 971,80	1,14	0,51	1,14	0,13	2,032	0,13	40	**PHG 11700-MXL-...**
	1 516	121,32	3 081,53	1,14	0,51	1,14	0,13	2,032	0,13	40	**PHG 12132-MXL-...**
	1 806	145,52	3 696,21	1,14	0,51	1,14	0,13	2,032	0,13	40	**PHG 14552-MXL-...**
	1 875	150,00	3 810,00	1,14	0,51	1,14	0,13	2,032	0,13	40	**PHG 15000-MXL-...**
	2 044	163,55	4 154,17	1,14	0,51	1,14	0,13	2,032	0,13	40	**PHG 16355-MXL-...**
XL	22	4,40	111,76	2,30	1,27	2,57	0,38	5,080	0,38	50	**PHG 44-XL-...**
	28	5,60	142,24	2,30	1,27	2,57	0,38	5,080	0,38	50	**PHG 56-XL-...**
	30	6,00	152,40	2,30	1,27	2,57	0,38	5,080	0,38	50	**PHG 60-XL-...**
	35	7,00	177,80	2,30	1,27	2,57	0,38	5,080	0,38	50	**PHG 70-XL-...**
	36	7,20	182,88	2,30	1,27	2,57	0,38	5,080	0,38	50	**PHG 72-XL-...**
	37	7,40	187,96	2,30	1,27	2,57	0,38	5,080	0,38	50	**PHG 74-XL-...**
	38	7,60	193,04	2,30	1,27	2,57	0,38	5,080	0,38	50	**PHG 76-XL-...**
	40	8,00	203,20	2,30	1,27	2,57	0,38	5,080	0,38	50	**PHG 80-XL-...**
	41	8,20	208,28	2,30	1,27	2,57	0,38	5,080	0,38	50	**PHG 82-XL-...**
	42	8,40	213,36	2,30	1,27	2,57	0,38	5,080	0,38	50	**PHG 84-XL-...**
	43	8,60	218,44	2,30	1,27	2,57	0,38	5,080	0,38	50	**PHG 86-XL-...**
	44	8,80	223,52	2,30	1,27	2,57	0,38	5,080	0,38	50	**PHG 88-XL-...**
	45	9,00	228,60	2,30	1,27	2,57	0,38	5,080	0,38	50	**PHG 90-XL-...**
	46	9,20	233,68	2,30	1,27	2,57	0,38	5,080	0,38	50	**PHG 92-XL-...**
	47	9,40	238,76	2,30	1,27	2,57	0,38	5,080	0,38	50	**PHG 94-XL-...**
	48	9,60	243,84	2,30	1,27	2,57	0,38	5,080	0,38	50	**PHG 96-XL-...**
	49	9,80	248,92	2,30	1,27	2,57	0,38	5,080	0,38	50	**PHG 98-XL-...**
	50	10,00	254,00	2,30	1,27	2,57	0,38	5,080	0,38	50	**PHG 100-XL-...**
	51	10,20	259,08	2,30	1,27	2,57	0,38	5,080	0,38	50	**PHG 102-XL-...**
	52	10,40	264,16	2,30	1,27	2,57	0,38	5,080	0,38	50	**PHG 104-XL-...**
	53	10,60	269,24	2,30	1,27	2,57	0,38	5,080	0,38	50	**PHG 106-XL-...**
	54	10,80	274,32	2,30	1,27	2,57	0,38	5,080	0,38	50	**PHG 108-XL-...**
	55	11,00	279,40	2,30	1,27	2,57	0,38	5,080	0,38	50	**PHG 110-XL-...**
	56	11,20	284,48	2,30	1,27	2,57	0,38	5,080	0,38	50	**PHG 112-XL-...**
	57	11,40	289,56	2,30	1,27	2,57	0,38	5,080	0,38	50	**PHG 114-XL-...**

Non-standard lengths may also be available.
To complete designation, add three digits for belt width in 1/100ths of an inch; e.g. for a 1/4" width add 025 or for a 3/8" width add 037.
Full sleeves are available in various widths. Please contact your SKF Authorized Distributor.

Section	Number of teeth	Dimensions Pitch length		h_1	h_2	A	B	p	C	α	Designation
–	–	in.	mm							°	–
XL	58	11,60	294,64	2,30	1,27	2,57	0,38	5,080	0,38	50	PHG 116-XL-...
	59	11,80	299,72	2,30	1,27	2,57	0,38	5,080	0,38	50	PHG 118-XL-...
	60	12,00	304,80	2,30	1,27	2,57	0,38	5,080	0,38	50	PHG 120-XL-...
	61	12,20	309,88	2,30	1,27	2,57	0,38	5,080	0,38	50	PHG 122-XL-...
	62	12,40	314,96	2,30	1,27	2,57	0,38	5,080	0,38	50	PHG 124-XL-...
	63	12,60	320,04	2,30	1,27	2,57	0,38	5,080	0,38	50	PHG 126-XL-...
	64	12,80	325,12	2,30	1,27	2,57	0,38	5,080	0,38	50	PHG 128-XL-...
	65	13,00	330,20	2,30	1,27	2,57	0,38	5,080	0,38	50	PHG 130-XL-...
	66	13,20	335,28	2,30	1,27	2,57	0,38	5,080	0,38	50	PHG 132-XL-...
	67	13,40	340,36	2,30	1,27	2,57	0,38	5,080	0,38	50	PHG 134-XL-...
	68	13,60	345,44	2,30	1,27	2,57	0,38	5,080	0,38	50	PHG 136-XL-...
	70	14,00	355,60	2,30	1,27	2,57	0,38	5,080	0,38	50	PHG 140-XL-...
	71	14,20	360,68	2,30	1,27	2,57	0,38	5,080	0,38	50	PHG 142-XL-...
	72	14,40	365,76	2,30	1,27	2,57	0,38	5,080	0,38	50	PHG 144-XL-...
	73	14,60	370,84	2,30	1,27	2,57	0,38	5,080	0,38	50	PHG 146-XL-...
	74	14,80	375,92	2,30	1,27	2,57	0,38	5,080	0,38	50	PHG 148-XL-...
	75	15,00	381,00	2,30	1,27	2,57	0,38	5,080	0,38	50	PHG 150-XL-...
	76	15,20	386,08	2,30	1,27	2,57	0,38	5,080	0,38	50	PHG 152-XL-...
	77	15,40	391,16	2,30	1,27	2,57	0,38	5,080	0,38	50	PHG 154-XL-...
	78	15,60	396,24	2,30	1,27	2,57	0,38	5,080	0,38	50	PHG 156-XL-...
	80	16,00	406,40	2,30	1,27	2,57	0,38	5,080	0,38	50	PHG 160-XL-...
	81	16,20	411,48	2,30	1,27	2,57	0,38	5,080	0,38	50	PHG 162-XL-...
	82	16,40	416,56	2,30	1,27	2,57	0,38	5,080	0,38	50	PHG 164-XL-...
	83	16,60	421,64	2,30	1,27	2,57	0,38	5,080	0,38	50	PHG 166-XL-...
	84	16,80	426,72	2,30	1,27	2,57	0,38	5,080	0,38	50	PHG 168-XL-...
	85	17,00	431,80	2,30	1,27	2,57	0,38	5,080	0,38	50	PHG 170-XL-...
	86	17,20	436,88	2,30	1,27	2,57	0,38	5,080	0,38	50	PHG 172-XL-...
	88	17,60	447,04	2,30	1,27	2,57	0,38	5,080	0,38	50	PHG 176-XL-...
	89	17,80	452,12	2,30	1,27	2,57	0,38	5,080	0,38	50	PHG 178-XL-...
	90	18,00	457,20	2,30	1,27	2,57	0,38	5,080	0,38	50	PHG 180-XL-...
	91	18,20	462,28	2,30	1,27	2,57	0,38	5,080	0,38	50	PHG 182-XL-...
	92	18,40	467,36	2,30	1,27	2,57	0,38	5,080	0,38	50	PHG 184-XL-...
	93	18,60	472,44	2,30	1,27	2,57	0,38	5,080	0,38	50	PHG 186-XL-...
	94	18,80	477,52	2,30	1,27	2,57	0,38	5,080	0,38	50	PHG 188-XL-...
	95	19,00	482,60	2,30	1,27	2,57	0,38	5,080	0,38	50	PHG 190-XL-...
	96	19,20	487,68	2,30	1,27	2,57	0,38	5,080	0,38	50	PHG 192-XL-...
	97	19,40	492,76	2,30	1,27	2,57	0,38	5,080	0,38	50	PHG 194-XL-...
	98	19,60	497,84	2,30	1,27	2,57	0,38	5,080	0,38	50	PHG 196-XL-...
	99	19,80	502,92	2,30	1,27	2,57	0,38	5,080	0,38	50	PHG 198-XL-...
	100	20,00	508,00	2,30	1,27	2,57	0,38	5,080	0,38	50	PHG 200-XL-...
	101	20,20	513,08	2,30	1,27	2,57	0,38	5,080	0,38	50	PHG 202-XL-...
	103	20,60	523,24	2,30	1,27	2,57	0,38	5,080	0,38	50	PHG 206-XL-...
	104	20,80	528,32	2,30	1,27	2,57	0,38	5,080	0,38	50	PHG 208-XL-...
	105	21,00	533,40	2,30	1,27	2,57	0,38	5,080	0,38	50	PHG 210-XL-...
	106	21,20	538,48	2,30	1,27	2,57	0,38	5,080	0,38	50	PHG 212-XL-...
	107	21,40	543,56	2,30	1,27	2,57	0,38	5,080	0,38	50	PHG 214-XL-...
	109	21,80	553,72	2,30	1,27	2,57	0,38	5,080	0,38	50	PHG 218-XL-...
	110	22,00	558,80	2,30	1,27	2,57	0,38	5,080	0,38	50	PHG 220-XL-...
	113	22,60	574,04	2,30	1,27	2,57	0,38	5,080	0,38	50	PHG 226-XL-...
	114	22,80	579,12	2,30	1,27	2,57	0,38	5,080	0,38	50	PHG 228-XL-...
	115	23,00	584,20	2,30	1,27	2,57	0,38	5,080	0,38	50	PHG 230-XL-...
	117	23,40	594,36	2,30	1,27	2,57	0,38	5,080	0,38	50	PHG 234-XL-...
	118	23,60	599,44	2,30	1,27	2,57	0,38	5,080	0,38	50	PHG 236-XL-...
	120	24,00	609,60	2,30	1,27	2,57	0,38	5,080	0,38	50	PHG 240-XL-...
	124	24,80	629,92	2,30	1,27	2,57	0,38	5,080	0,38	50	PHG 248-XL-...
	125	25,00	635,00	2,30	1,27	2,57	0,38	5,080	0,38	50	PHG 250-XL-...
	128	25,60	650,24	2,30	1,27	2,57	0,38	5,080	0,38	50	PHG 256-XL-...
	130	26,00	660,40	2,30	1,27	2,57	0,38	5,080	0,38	50	PHG 260-XL-...
	132	26,40	670,56	2,30	1,27	2,57	0,38	5,080	0,38	50	PHG 264-XL-...
	135	27,00	685,80	2,30	1,27	2,57	0,38	5,080	0,38	50	PHG 270-XL-...
	137	27,40	695,96	2,30	1,27	2,57	0,38	5,080	0,38	50	PHG 274-XL-...
	138	27,60	701,04	2,30	1,27	2,57	0,38	5,080	0,38	50	PHG 276-XL-...
	140	28,00	711,20	2,30	1,27	2,57	0,38	5,080	0,38	50	PHG 280-XL-...
	141	28,20	716,28	2,30	1,27	2,57	0,38	5,080	0,38	50	PHG 282-XL-...
	143	28,60	726,44	2,30	1,27	2,57	0,38	5,080	0,38	50	PHG 286-XL-...
	145	29,00	736,60	2,30	1,27	2,57	0,38	5,080	0,38	50	PHG 290-XL-...
	150	30,00	762,00	2,30	1,27	2,57	0,38	5,080	0,38	50	PHG 300-XL-...
	152	30,40	772,16	2,30	1,27	2,57	0,38	5,080	0,38	50	PHG 304-XL-...
	153	30,60	777,24	2,30	1,27	2,57	0,38	5,080	0,38	50	PHG 306-XL-...
	155	31,00	787,40	2,30	1,27	2,57	0,38	5,080	0,38	50	PHG 310-XL-...
	158	31,60	802,64	2,30	1,27	2,57	0,38	5,080	0,38	50	PHG 316-XL-...
	160	32,00	812,80	2,30	1,27	2,57	0,38	5,080	0,38	50	PHG 320-XL-...
	161	32,20	817,88	2,30	1,27	2,57	0,38	5,080	0,38	50	PHG 322-XL-...
	163	32,60	828,04	2,30	1,27	2,57	0,38	5,080	0,38	50	PHG 326-XL-...
	165	33,00	838,20	2,30	1,27	2,57	0,38	5,080	0,38	50	PHG 330-XL-...
	170	34,00	863,60	2,30	1,27	2,57	0,38	5,080	0,38	50	PHG 340-XL-...

Non-standard lengths may also be available.
To complete designation, add three digits for belt width in 1/100ths of an inch; e.g. for a 1/4" width add 025 or for a 3/8" width add 037.
Full sleeves are available in various widths. Please contact your SKF Authorized Distributor.

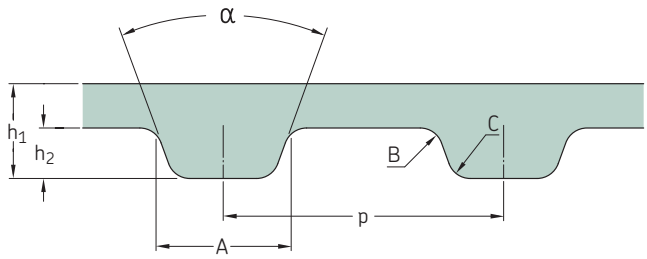

Section	Number of teeth	Dimensions Pitch length									Designation
				h_1	h_2	A	B	p	C	α	
–	–	in.	mm							°	–
XL	172	34,40	873,76	2,30	1,27	2,57	0,38	5,080	0,38	50	**PHG 344-XL-...**
	174	34,80	883,92	2,30	1,27	2,57	0,38	5,080	0,38	50	**PHG 348-XL-...**
	176	35,20	894,08	2,30	1,27	2,57	0,38	5,080	0,38	50	**PHG 352-XL-...**
	178	35,60	904,24	2,30	1,27	2,57	0,38	5,080	0,38	50	**PHG 356-XL-...**
	180	36,00	914,40	2,30	1,27	2,57	0,38	5,080	0,38	50	**PHG 360-XL-...**
	181	36,20	919,48	2,30	1,27	2,57	0,38	5,080	0,38	50	**PHG 362-XL-...**
	182	36,40	924,56	2,30	1,27	2,57	0,38	5,080	0,38	50	**PHG 364-XL-...**
	186	37,20	944,88	2,30	1,27	2,57	0,38	5,080	0,38	50	**PHG 372-XL-...**
	188	37,60	955,04	2,30	1,27	2,57	0,38	5,080	0,38	50	**PHG 376-XL-...**
	190	38,00	965,20	2,30	1,27	2,57	0,38	5,080	0,38	50	**PHG 380-XL-...**
	192	38,40	975,36	2,30	1,27	2,57	0,38	5,080	0,38	50	**PHG 384-XL-...**
	195	39,00	990,60	2,30	1,27	2,57	0,38	5,080	0,38	50	**PHG 390-XL-...**
	196	39,20	995,68	2,30	1,27	2,57	0,38	5,080	0,38	50	**PHG 392-XL-...**
	200	40,00	1 016,00	2,30	1,27	2,57	0,38	5,080	0,38	50	**PHG 400-XL-...**
	206	41,20	1 046,48	2,30	1,27	2,57	0,38	5,080	0,38	50	**PHG 412-XL-...**
	207	41,40	1 051,56	2,30	1,27	2,57	0,38	5,080	0,38	50	**PHG 414-XL-...**
	212	42,40	1 076,96	2,30	1,27	2,57	0,38	5,080	0,38	50	**PHG 424-XL-...**
	215	43,00	1 092,20	2,30	1,27	2,57	0,38	5,080	0,38	50	**PHG 430-XL-...**
	216	43,20	1 097,28	2,30	1,27	2,57	0,38	5,080	0,38	50	**PHG 432-XL-...**
	217	43,40	1 102,36	2,30	1,27	2,57	0,38	5,080	0,38	50	**PHG 434-XL-...**
	225	45,00	1 143,00	2,30	1,27	2,57	0,38	5,080	0,38	50	**PHG 450-XL-...**
	230	46,00	1 168,40	2,30	1,27	2,57	0,38	5,080	0,38	50	**PHG 460-XL-...**
	240	48,00	1 219,20	2,30	1,27	2,57	0,38	5,080	0,38	50	**PHG 480-XL-...**
	245	49,00	1 244,60	2,30	1,27	2,57	0,38	5,080	0,38	50	**PHG 490-XL-...**
	246	49,20	1 249,68	2,30	1,27	2,57	0,38	5,080	0,38	50	**PHG 492-XL-...**
	257	51,40	1 305,56	2,30	1,27	2,57	0,38	5,080	0,38	50	**PHG 514-XL-...**
	280	56,00	1 422,40	2,30	1,27	2,57	0,38	5,080	0,38	50	**PHG 560-XL-...**
	282	56,40	1 432,56	2,30	1,27	2,57	0,38	5,080	0,38	50	**PHG 564-XL-...**
	290	58,00	1 473,20	2,30	1,27	2,57	0,38	5,080	0,38	50	**PHG 580-XL-...**
	306	61,20	1 554,48	2,30	1,27	2,57	0,38	5,080	0,38	50	**PHG 612-XL-...**
	315	63,00	1 600,20	2,30	1,27	2,57	0,38	5,080	0,38	50	**PHG 630-XL-...**
	335	67,00	1 701,80	2,30	1,27	2,57	0,38	5,080	0,38	50	**PHG 670-XL-...**
	336	67,20	1 706,88	2,30	1,27	2,57	0,38	5,080	0,38	50	**PHG 672-XL-...**
	343	68,60	1 742,44	2,30	1,27	2,57	0,38	5,080	0,38	50	**PHG 686-XL-...**
	355	71,00	1 803,40	2,30	1,27	2,57	0,38	5,080	0,38	50	**PHG 710-XL-...**
	360	72,00	1 828,80	2,30	1,27	2,57	0,38	5,080	0,38	50	**PHG 720-XL-...**
	368	73,60	1 869,44	2,30	1,27	2,57	0,38	5,080	0,38	50	**PHG 736-XL-...**
	394	78,80	2 001,52	2,30	1,27	2,57	0,38	5,080	0,38	50	**PHG 788-XL-...**
	430	86,00	2 184,40	2,30	1,27	2,57	0,38	5,080	0,38	50	**PHG 860-XL-...**
	516	103,20	2 621,28	2,30	1,27	2,57	0,38	5,080	0,38	50	**PHG 1032-XL-...**
	610	122,00	3 098,80	2,30	1,27	2,57	0,38	5,080	0,38	50	**PHG 1220-XL-...**
	650	130,00	3 302,00	2,30	1,27	2,57	0,38	5,080	0,38	50	**PHG 1300-XL-...**
	747	149,40	3 794,76	2,30	1,27	2,57	0,38	5,080	0,38	50	**PHG 1494-XL-...**
	1 064	212,80	5 405,12	2,30	1,27	2,57	0,38	5,080	0,38	50	**PHG 2128-XL-...**
L	18	6,75	171,45	3,60	1,91	4,65	0,51	9,525	0,51	40	**PHG 67-L-...**
	26	9,75	247,65	3,60	1,91	4,65	0,51	9,525	0,51	40	**PHG 98-L-...**
	29	10,88	276,23	3,60	1,91	4,65	0,51	9,525	0,51	40	**PHG 109-L-...**
	30	11,25	285,75	3,60	1,91	4,65	0,51	9,525	0,51	40	**PHG 113-L-...**
	33	12,38	314,33	3,60	1,91	4,65	0,51	9,525	0,51	40	**PHG 124-L-...**
	35	13,13	333,38	3,60	1,91	4,65	0,51	9,525	0,51	40	**PHG 130-L-...**
	36	13,50	342,90	3,60	1,91	4,65	0,51	9,525	0,51	40	**PHG 135-L-...**
	38	14,25	361,95	3,60	1,91	4,65	0,51	9,525	0,51	40	**PHG 143-L-...**
	40	15,00	381,00	3,60	1,91	4,65	0,51	9,525	0,51	40	**PHG 150-L-...**
	41	15,38	390,53	3,60	1,91	4,65	0,51	9,525	0,51	40	**PHG 154-L-...**

Non-standard lengths may also be available.
To complete designation, add three digits for belt width in 1/100ths of an inch; e.g. for a 1/4" width add 025 or for a 3/8" width add 037.
Full sleeves are available in various widths. Please contact your SKF Authorized Distributor.

Section	Number of teeth	Dimensions Pitch length		h_1	h_2	A	B	p	C	α	Designation
–	–	in.	mm							°	–
L	42	15,75	400,05	3,60	1,91	4,65	0,51	9,525	0,51	40	**PHG 158-L-...**
	43	16,13	409,58	3,60	1,91	4,65	0,51	9,525	0,51	40	**PHG 160-L-...**
	44	16,50	419,10	3,60	1,91	4,65	0,51	9,525	0,51	40	**PHG 165-L-...**
	45	16,88	428,63	3,60	1,91	4,65	0,51	9,525	0,51	40	**PHG 169-L-...**
	46	17,25	438,15	3,60	1,91	4,65	0,51	9,525	0,51	40	**PHG 173-L-...**
	47	17,63	447,68	3,60	1,91	4,65	0,51	9,525	0,51	40	**PHG 177-L-...**
	48	18,00	457,20	3,60	1,91	4,65	0,51	9,525	0,51	40	**PHG 180-L-...**
	49	18,38	466,73	3,60	1,91	4,65	0,51	9,525	0,51	40	**PHG 185-L-...**
	50	18,75	476,25	3,60	1,91	4,65	0,51	9,525	0,51	40	**PHG 187-L-...**
	51	19,13	485,78	3,60	1,91	4,65	0,51	9,525	0,51	40	**PHG 191-L-...**
	52	19,50	495,30	3,60	1,91	4,65	0,51	9,525	0,51	40	**PHG 195-L-...**
	54	20,25	514,35	3,60	1,91	4,65	0,51	9,525	0,51	40	**PHG 203-L-...**
	56	21,00	533,40	3,60	1,91	4,65	0,51	9,525	0,51	40	**PHG 210-L-...**
	57	21,38	542,93	3,60	1,91	4,65	0,51	9,525	0,51	40	**PHG 214-L-...**
	58	21,75	552,45	3,60	1,91	4,65	0,51	9,525	0,51	40	**PHG 217-L-...**
	60	22,50	571,50	3,60	1,91	4,65	0,51	9,525	0,51	40	**PHG 225-L-...**
	62	23,25	590,55	3,60	1,91	4,65	0,51	9,525	0,51	40	**PHG 232-L-...**
	63	23,60	599,44	3,60	1,91	4,65	0,51	9,525	0,51	40	**PHG 236-L-...**
	64	24,00	609,60	3,60	1,91	4,65	0,51	9,525	0,51	40	**PHG 240-L-...**
	65	24,38	619,13	3,60	1,91	4,65	0,51	9,525	0,51	40	**PHG 244-L-...**
	68	25,50	647,70	3,60	1,91	4,65	0,51	9,525	0,51	40	**PHG 255-L-...**
	69	25,80	655,32	3,60	1,91	4,65	0,51	9,525	0,51	40	**PHG 258-L-...**
	70	26,25	666,75	3,60	1,91	4,65	0,51	9,525	0,51	40	**PHG 263-L-...**
	71	26,63	676,28	3,60	1,91	4,65	0,51	9,525	0,51	40	**PHG 265-L-...**
	72	27,00	685,80	3,60	1,91	4,65	0,51	9,525	0,51	40	**PHG 270-L-...**
	73	27,38	695,33	3,60	1,91	4,65	0,51	9,525	0,51	40	**PHG 275-L-...**
	74	27,75	704,85	3,60	1,91	4,65	0,51	9,525	0,51	40	**PHG 277-L-...**
	75	28,13	714,38	3,60	1,91	4,65	0,51	9,525	0,51	40	**PHG 280-L-...**
	76	28,50	723,90	3,60	1,91	4,65	0,51	9,525	0,51	40	**PHG 285-L-...**
	80	30,00	762,00	3,60	1,91	4,65	0,51	9,525	0,51	40	**PHG 300-L-...**
	81	30,38	771,53	3,60	1,91	4,65	0,51	9,525	0,51	40	**PHG 304-L-...**
	84	31,50	800,10	3,60	1,91	4,65	0,51	9,525	0,51	40	**PHG 315-L-...**
	85	31,88	809,63	3,60	1,91	4,65	0,51	9,525	0,51	40	**PHG 320-L-...**
	86	32,25	819,15	3,60	1,91	4,65	0,51	9,525	0,51	40	**PHG 322-L-...**
	87	32,63	828,68	3,60	1,91	4,65	0,51	9,525	0,51	40	**PHG 328-L-...**
	88	33,00	838,20	3,60	1,91	4,65	0,51	9,525	0,51	40	**PHG 330-L-...**
	89	33,38	847,73	3,60	1,91	4,65	0,51	9,525	0,51	40	**PHG 334-L-...**
	90	33,75	857,25	3,60	1,91	4,65	0,51	9,525	0,51	40	**PHG 337-L-...**
	91	34,13	866,78	3,60	1,91	4,65	0,51	9,525	0,51	40	**PHG 341-L-...**
	92	34,50	876,30	3,60	1,91	4,65	0,51	9,525	0,51	40	**PHG 345-L-...**
	94	35,25	895,35	3,60	1,91	4,65	0,51	9,525	0,51	40	**PHG 352-L-...**
	96	36,00	914,40	3,60	1,91	4,65	0,51	9,525	0,51	40	**PHG 360-L-...**
	98	36,75	933,45	3,60	1,91	4,65	0,51	9,525	0,51	40	**PHG 367-L-...**
	99	37,13	942,98	3,60	1,91	4,65	0,51	9,525	0,51	40	**PHG 371-L-...**
	100	37,50	952,50	3,60	1,91	4,65	0,51	9,525	0,51	40	**PHG 375-L-...**
	102	38,25	971,55	3,60	1,91	4,65	0,51	9,525	0,51	40	**PHG 382-L-...**
	103	38,63	981,08	3,60	1,91	4,65	0,51	9,525	0,51	40	**PHG 387-L-...**
	104	39,00	990,60	3,60	1,91	4,65	0,51	9,525	0,51	40	**PHG 390-L-...**
	105	39,38	1 000,13	3,60	1,91	4,65	0,51	9,525	0,51	40	**PHG 394-L-...**
	106	39,75	1 009,65	3,60	1,91	4,65	0,51	9,525	0,51	40	**PHG 397-L-...**
	108	40,50	1 028,70	3,60	1,91	4,65	0,51	9,525	0,51	40	**PHG 405-L-...**
	109	40,88	1 038,23	3,60	1,91	4,65	0,51	9,525	0,51	40	**PHG 408-L-...**
	110	41,25	1 047,75	3,60	1,91	4,65	0,51	9,525	0,51	40	**PHG 412-L-...**
	112	42,00	1 066,80	3,60	1,91	4,65	0,51	9,525	0,51	40	**PHG 420-L-...**
	114	42,75	1 085,85	3,60	1,91	4,65	0,51	9,525	0,51	40	**PHG 427-L-...**
	116	43,50	1 104,90	3,60	1,91	4,65	0,51	9,525	0,51	40	**PHG 435-L-...**
	117	43,88	1 114,43	3,60	1,91	4,65	0,51	9,525	0,51	40	**PHG 439-L-...**
	119	44,20	1 122,68	3,60	1,91	4,65	0,51	9,525	0,51	40	**PHG 442-L-...**
	120	45,00	1 143,00	3,60	1,91	4,65	0,51	9,525	0,51	40	**PHG 450-L-...**
	121	45,38	1 152,53	3,60	1,91	4,65	0,51	9,525	0,51	40	**PHG 453-L-...**
	123	46,13	1 171,70	3,60	1,91	4,65	0,51	9,525	0,51	40	**PHG 461-L-...**
	124	46,50	1 181,10	3,60	1,91	4,65	0,51	9,525	0,51	40	**PHG 465-L-...**
	128	48,00	1 219,20	3,60	1,91	4,65	0,51	9,525	0,51	40	**PHG 480-L-...**
	132	49,50	1 257,30	3,60	1,91	4,65	0,51	9,525	0,51	40	**PHG 495-L-...**
	133	50,00	1 270,00	3,60	1,91	4,65	0,51	9,525	0,51	40	**PHG 500-L-...**
	136	51,00	1 295,40	3,60	1,91	4,65	0,51	9,525	0,51	40	**PHG 510-L-...**
	138	51,80	1 315,72	3,60	1,91	4,65	0,51	9,525	0,51	40	**PHG 518-L-...**
	140	52,50	1 333,50	3,60	1,91	4,65	0,51	9,525	0,51	40	**PHG 525-L-...**
	144	54,00	1 371,60	3,60	1,91	4,65	0,51	9,525	0,51	40	**PHG 540-L-...**
	148	55,50	1 409,70	3,60	1,91	4,65	0,51	9,525	0,51	40	**PHG 555-L-...**
	148	54,80	1 391,92	3,60	1,91	4,65	0,51	9,525	0,51	40	**PHG 548-L-...**
	152	57,00	1 447,80	3,60	1,91	4,65	0,51	9,525	0,51	40	**PHG 570-L-...**
	153	57,38	1 457,33	3,60	1,91	4,65	0,51	9,525	0,51	40	**PHG 574-L-...**
	155	58,13	1 476,38	3,60	1,91	4,65	0,51	9,525	0,51	40	**PHG 581-L-...**
	156	58,50	1 485,90	3,60	1,91	4,65	0,51	9,525	0,51	40	**PHG 585-L-...**
	160	60,00	1 524,00	3,60	1,91	4,65	0,51	9,525	0,51	40	**PHG 600-L-...**

Non-standard lengths may also be available.
To complete designation, add three digits for belt width in 1/100ths of an inch; e.g. for a 1/4" width add 025 or for a 3/8" width add 037.
Full sleeves are available in various widths. Please contact your SKF Authorized Distributor.

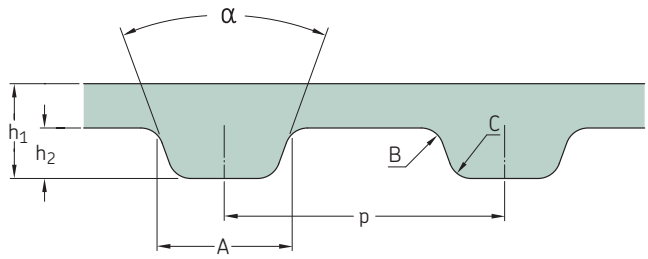

Section	Number of teeth	Dimensions Pitch length									Designation
				h_1	h_2	A	B	p	C	α	
–	–	in.	mm							°	–
L	165	61,88	1 571,63	3,60	1,91	4,65	0,51	9,525	0,51	40	**PHG 619-L-...**
	168	63,00	1 600,20	3,60	1,91	4,65	0,51	9,525	0,51	40	**PHG 630-L-...**
	169	63,38	1 609,73	3,60	1,91	4,65	0,51	9,525	0,51	40	**PHG 634-L-...**
	176	66,00	1 676,40	3,60	1,91	4,65	0,51	9,525	0,51	40	**PHG 660-L-...**
	185	69,38	1 762,13	3,60	1,91	4,65	0,51	9,525	0,51	40	**PHG 694-L-...**
	186	69,75	1 771,65	3,60	1,91	4,65	0,51	9,525	0,51	40	**PHG 697-L-...**
	187	70,13	1 781,30	3,60	1,91	4,65	0,51	9,525	0,51	40	**PHG 701-L-...**
	192	72,00	1 828,80	3,60	1,91	4,65	0,51	9,525	0,51	40	**PHG 720-L-...**
	194	72,75	1 847,85	3,60	1,91	4,65	0,51	9,525	0,51	40	**PHG 728-L-...**
	195	73,13	1 857,38	3,60	1,91	4,65	0,51	9,525	0,51	40	**PHG 731-L-...**
	204	76,50	1 943,10	3,60	1,91	4,65	0,51	9,525	0,51	40	**PHG 765-L-...**
	218	81,75	2 076,45	3,60	1,91	4,65	0,51	9,525	0,51	40	**PHG 817-L-...**
	224	84,00	2 133,60	3,60	1,91	4,65	0,51	9,525	0,51	40	**PHG 840-L-...**
	228	85,50	2 171,70	3,60	1,91	4,65	0,51	9,525	0,51	40	**PHG 855-L-...**
	230	86,25	2 190,75	3,60	1,91	4,65	0,51	9,525	0,51	40	**PHG 863-L-...**
	232	87,00	2 209,80	3,60	1,91	4,65	0,51	9,525	0,51	40	**PHG 870-L-...**
	235	88,13	2 238,38	3,60	1,91	4,65	0,51	9,525	0,51	40	**PHG 881-L-...**
	240	90,00	2 286,00	3,60	1,91	4,65	0,51	9,525	0,51	40	**PHG 900-L-...**
	244	91,50	2 324,10	3,60	1,91	4,65	0,51	9,525	0,51	40	**PHG 915-L-...**
	249	93,38	2 371,73	3,60	1,91	4,65	0,51	9,525	0,51	40	**PHG 934-L-...**
	261	98,00	2 489,20	3,60	1,91	4,65	0,51	9,525	0,51	40	**PHG 980-L-...**
	274	102,75	2 609,85	3,60	1,91	4,65	0,51	9,525	0,51	40	**PHG 1028-L-...**
	306	114,75	2 914,65	3,60	1,91	4,65	0,51	9,525	0,51	40	**PHG 1148-L-...**
	318	119,25	3 028,95	3,60	1,91	4,65	0,51	9,525	0,51	40	**PHG 1192-L-...**
	375	140,63	3 571,88	3,60	1,91	4,65	0,51	9,525	0,51	40	**PHG 1406-L-...**
	378	141,75	3 600,45	3,60	1,91	4,65	0,51	9,525	0,51	40	**PHG 1418-L-...**
	447	167,63	4 257,68	3,60	1,91	4,65	0,51	9,525	0,51	40	**PHG 1675-L-...**
	530	198,75	5 048,25	3,60	1,91	4,65	0,51	9,525	0,51	40	**PHG 1998-L-...**
H	29	14,50	368,30	4,30	2,29	6,12	1,02	12,700	1,02	40	**PHG 145-H-...**
	37	18,50	469,90	4,30	2,29	6,12	1,02	12,700	1,02	40	**PHG 185-H-...**
	40	20,00	508,00	4,30	2,29	6,12	1,02	12,700	1,02	40	**PHG 200-H-...**
	41	20,50	520,70	4,30	2,29	6,12	1,02	12,700	1,02	40	**PHG 205-H-...**
	42	21,00	533,40	4,30	2,29	6,12	1,02	12,700	1,02	40	**PHG 210-H-...**
	44	22,00	558,80	4,30	2,29	6,12	1,02	12,700	1,02	40	**PHG 220-H-...**
	45	22,50	571,50	4,30	2,29	6,12	1,02	12,700	1,02	40	**PHG 225-H-...**
	46	23,00	584,20	4,30	2,29	6,12	1,02	12,700	1,02	40	**PHG 230-H-...**
	48	24,00	609,60	4,30	2,29	6,12	1,02	12,700	1,02	40	**PHG 240-H-...**
	49	24,50	622,30	4,30	2,29	6,12	1,02	12,700	1,02	40	**PHG 245-H-...**
	50	25,00	635,00	4,30	2,29	6,12	1,02	12,700	1,02	40	**PHG 250-H-...**
	51	25,50	647,70	4,30	2,29	6,12	1,02	12,700	1,02	40	**PHG 255-H-...**
	52	26,00	660,40	4,30	2,29	6,12	1,02	12,700	1,02	40	**PHG 260-H-...**
	54	27,00	685,80	4,30	2,29	6,12	1,02	12,700	1,02	40	**PHG 270-H-...**
	56	28,00	711,20	4,30	2,29	6,12	1,02	12,700	1,02	40	**PHG 280-H-...**
	57	28,50	723,90	4,30	2,29	6,12	1,02	12,700	1,02	40	**PHG 285-H-...**
	58	29,00	736,60	4,30	2,29	6,12	1,02	12,700	1,02	40	**PHG 290-H-...**
	60	30,00	762,00	4,30	2,29	6,12	1,02	12,700	1,02	40	**PHG 300-H-...**
	62	31,00	787,40	4,30	2,29	6,12	1,02	12,700	1,02	40	**PHG 310-H-...**
	63	31,50	800,10	4,30	2,29	6,12	1,02	12,700	1,02	40	**PHG 315-H-...**
	64	32,00	812,80	4,30	2,29	6,12	1,02	12,700	1,02	40	**PHG 320-H-...**
	65	32,50	825,50	4,30	2,29	6,12	1,02	12,700	1,02	40	**PHG 325-H-...**
	66	33,00	838,20	4,30	2,29	6,12	1,02	12,700	1,02	40	**PHG 330-H-...**
	67	33,50	850,90	4,30	2,29	6,12	1,02	12,700	1,02	40	**PHG 335-H-...**
	68	34,00	863,60	4,30	2,29	6,12	1,02	12,700	1,02	40	**PHG 340-H-...**
	69	34,50	876,30	4,30	2,29	6,12	1,02	12,700	1,02	40	**PHG 345-H-...**

Non-standard lengths may also be available.
To complete designation, add three digits for belt width in 1/100ths of an inch; e.g. for a 1/4" width add 025 or for a 3/8" width add 037.
Full sleeves are available in various widths. Please contact your SKF Authorized Distributor.

Section	Number of teeth	Dimensions Pitch length		h_1	h_2	A	B	p	C	α	Designation
–	–	in.	mm							°	–
H	70	35,00	889,00	4,30	2,29	6,12	1,02	12,700	1,02	40	**PHG 350-H-...**
	71	35,50	901,70	4,30	2,29	6,12	1,02	12,700	1,02	40	**PHG 355-H-...**
	72	36,00	914,40	4,30	2,29	6,12	1,02	12,700	1,02	40	**PHG 360-H-...**
	73	36,50	927,10	4,30	2,29	6,12	1,02	12,700	1,02	40	**PHG 365-H-...**
	74	37,00	939,80	4,30	2,29	6,12	1,02	12,700	1,02	40	**PHG 370-H-...**
	75	37,50	952,50	4,30	2,29	6,12	1,02	12,700	1,02	40	**PHG 375-H-...**
	76	38,00	965,20	4,30	2,29	6,12	1,02	12,700	1,02	40	**PHG 380-H-...**
	78	39,00	990,60	4,30	2,29	6,12	1,02	12,700	1,02	40	**PHG 390-H-...**
	79	39,50	1 003,30	4,30	2,29	6,12	1,02	12,700	1,02	40	**PHG 395-H-...**
	80	40,00	1 016,00	4,30	2,29	6,12	1,02	12,700	1,02	40	**PHG 400-H-...**
	81	40,50	1 028,70	4,30	2,29	6,12	1,02	12,700	1,02	40	**PHG 405-H-...**
	82	41,00	1 041,40	4,30	2,29	6,12	1,02	12,700	1,02	40	**PHG 410-H-...**
	84	42,00	1 066,80	4,30	2,29	6,12	1,02	12,700	1,02	40	**PHG 420-H-...**
	85	42,50	1 079,50	4,30	2,29	6,12	1,02	12,700	1,02	40	**PHG 425-H-...**
	86	43,00	1 092,20	4,30	2,29	6,12	1,02	12,700	1,02	40	**PHG 430-H-...**
	89	44,50	1 130,30	4,30	2,29	6,12	1,02	12,700	1,02	40	**PHG 445-H-...**
	90	45,00	1 143,00	4,30	2,29	6,12	1,02	12,700	1,02	40	**PHG 450-H-...**
	91	45,50	1 155,70	4,30	2,29	6,12	1,02	12,700	1,02	40	**PHG 455-H-...**
	92	46,00	1 168,40	4,30	2,29	6,12	1,02	12,700	1,02	40	**PHG 460-H-...**
	93	46,50	1 181,10	4,30	2,29	6,12	1,02	12,700	1,02	40	**PHG 465-H-...**
	96	48,00	1 219,20	4,30	2,29	6,12	1,02	12,700	1,02	40	**PHG 480-H-...**
	97	48,50	1 231,90	4,30	2,29	6,12	1,02	12,700	1,02	40	**PHG 485-H-...**
	98	49,00	1 244,60	4,30	2,29	6,12	1,02	12,700	1,02	40	**PHG 490-H-...**
	100	50,00	1 270,00	4,30	2,29	6,12	1,02	12,700	1,02	40	**PHG 500-H-...**
	102	51,00	1 295,40	4,30	2,29	6,12	1,02	12,700	1,02	40	**PHG 510-H-...**
	103	51,50	1 308,10	4,30	2,29	6,12	1,02	12,700	1,02	40	**PHG 515-H-...**
	104	52,00	1 320,80	4,30	2,29	6,12	1,02	12,700	1,02	40	**PHG 520-H-...**
	105	52,50	1 333,50	4,30	2,29	6,12	1,02	12,700	1,02	40	**PHG 525-H-...**
	106	53,00	1 346,20	4,30	2,29	6,12	1,02	12,700	1,02	40	**PHG 530-H-...**
	107	53,50	1 358,90	4,30	2,29	6,12	1,02	12,700	1,02	40	**PHG 535-H-...**
	108	54,00	1 371,60	4,30	2,29	6,12	1,02	12,700	1,02	40	**PHG 540-H-...**
	110	55,00	1 397,00	4,30	2,29	6,12	1,02	12,700	1,02	40	**PHG 550-H-...**
	111	55,50	1 409,70	4,30	2,29	6,12	1,02	12,700	1,02	40	**PHG 555-H-...**
	112	56,00	1 422,40	4,30	2,29	6,12	1,02	12,700	1,02	40	**PHG 560-H-...**
	113	56,50	1 435,10	4,30	2,29	6,12	1,02	12,700	1,02	40	**PHG 565-H-...**
	114	57,00	1 447,80	4,30	2,29	6,12	1,02	12,700	1,02	40	**PHG 570-H-...**
	116	58,00	1 473,20	4,30	2,29	6,12	1,02	12,700	1,02	40	**PHG 580-H-...**
	117	58,50	1 485,90	4,30	2,29	6,12	1,02	12,700	1,02	40	**PHG 585-H-...**
	118	59,00	1 498,60	4,30	2,29	6,12	1,02	12,700	1,02	40	**PHG 590-H-...**
	120	60,00	1 524,00	4,30	2,29	6,12	1,02	12,700	1,02	40	**PHG 600-H-...**
	121	60,50	1 536,70	4,30	2,29	6,12	1,02	12,700	1,02	40	**PHG 605-H-...**
	122	61,00	1 549,40	4,30	2,29	6,12	1,02	12,700	1,02	40	**PHG 610-H-...**
	125	62,50	1 587,50	4,30	2,29	6,12	1,02	12,700	1,02	40	**PHG 625-H-...**
	126	63,00	1 600,20	4,30	2,29	6,12	1,02	12,700	1,02	40	**PHG 630-H-...**
	128	64,00	1 625,60	4,30	2,29	6,12	1,02	12,700	1,02	40	**PHG 640-H-...**
	130	65,00	1 651,00	4,30	2,29	6,12	1,02	12,700	1,02	40	**PHG 650-H-...**
	132	66,00	1 676,40	4,30	2,29	6,12	1,02	12,700	1,02	40	**PHG 660-H-...**
	134	67,00	1 701,80	4,30	2,29	6,12	1,02	12,700	1,02	40	**PHG 670-H-...**
	136	68,00	1 727,20	4,30	2,29	6,12	1,02	12,700	1,02	40	**PHG 680-H-...**
	138	69,00	1 752,60	4,30	2,29	6,12	1,02	12,700	1,02	40	**PHG 690-H-...**
	139	69,50	1 765,30	4,30	2,29	6,12	1,02	12,700	1,02	40	**PHG 695-H-...**
	140	70,00	1 778,00	4,30	2,29	6,12	1,02	12,700	1,02	40	**PHG 700-H-...**
	142	71,00	1 803,40	4,30	2,29	6,12	1,02	12,700	1,02	40	**PHG 710-H-...**
	144	72,00	1 828,80	4,30	2,29	6,12	1,02	12,700	1,02	40	**PHG 720-H-...**
	145	72,50	1 841,50	4,30	2,29	6,12	1,02	12,700	1,02	40	**PHG 725-H-...**
	146	73,00	1 854,20	4,30	2,29	6,12	1,02	12,700	1,02	40	**PHG 730-H-...**
	148	74,00	1 879,60	4,30	2,29	6,12	1,02	12,700	1,02	40	**PHG 740-H-...**
	150	75,00	1 905,00	4,30	2,29	6,12	1,02	12,700	1,02	40	**PHG 750-H-...**
	154	77,00	1 955,80	4,30	2,29	6,12	1,02	12,700	1,02	40	**PHG 770-H-...**
	155	77,50	1 968,50	4,30	2,29	6,12	1,02	12,700	1,02	40	**PHG 775-H-...**
	157	78,50	1 993,90	4,30	2,29	6,12	1,02	12,700	1,02	40	**PHG 785-H-...**
	160	80,00	2 032,00	4,30	2,29	6,12	1,02	12,700	1,02	40	**PHG 800-H-...**
	162	81,00	2 057,40	4,30	2,29	6,12	1,02	12,700	1,02	40	**PHG 810-H-...**
	164	82,00	2 082,80	4,30	2,29	6,12	1,02	12,700	1,02	40	**PHG 820-H-...**
	166	83,00	2 108,20	4,30	2,29	6,12	1,02	12,700	1,02	40	**PHG 830-H-...**
	168	84,00	2 133,60	4,30	2,29	6,12	1,02	12,700	1,02	40	**PHG 840-H-...**
	170	85,00	2 159,00	4,30	2,29	6,12	1,02	12,700	1,02	40	**PHG 850-H-...**
	172	86,00	2 184,40	4,30	2,29	6,12	1,02	12,700	1,02	40	**PHG 860-H-...**
	176	88,00	2 235,20	4,30	2,29	6,12	1,02	12,700	1,02	40	**PHG 880-H-...**
	179	89,50	2 273,30	4,30	2,29	6,12	1,02	12,700	1,02	40	**PHG 895-H-...**
	180	90,00	2 286,00	4,30	2,29	6,12	1,02	12,700	1,02	40	**PHG 900-H-...**
	184	92,00	2 336,80	4,30	2,29	6,12	1,02	12,700	1,02	40	**PHG 920-H-...**
	186	93,00	2 362,20	4,30	2,29	6,12	1,02	12,700	1,02	40	**PHG 930-H-...**
	190	95,00	2 413,00	4,30	2,29	6,12	1,02	12,700	1,02	40	**PHG 950-H-...**
	192	96,00	2 438,40	4,30	2,29	6,12	1,02	12,700	1,02	40	**PHG 960-H-...**
	196	98,00	2 489,20	4,30	2,29	6,12	1,02	12,700	1,02	40	**PHG 980-H-...**

Non-standard lengths may also be available.
To complete designation, add three digits for belt width in 1/100ths of an inch; e.g. for a 1/4" width add 025 or for a 3/8" width add 037.
Full sleeves are available in various widths. Please contact your SKF Authorized Distributor.

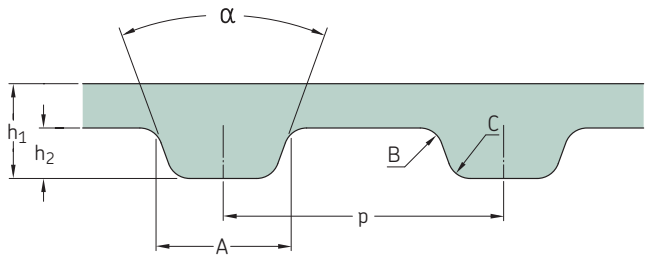

Section	Number of teeth	Dimensions Pitch length									Designation
				h_1	h_2	A	B	p	C	α	
–	–	in.	mm							°	–
H	197	98,50	2 501,90	4,30	2,29	6,12	1,02	12,700	1,02	40	**PHG 985-H-...**
	200	100,00	2 540,00	4,30	2,29	6,12	1,02	12,700	1,02	40	**PHG 1000-H-...**
	204	102,00	2 590,80	4,30	2,29	6,12	1,02	12,700	1,02	40	**PHG 1020-H-...**
	206	103,00	2 616,20	4,30	2,29	6,12	1,02	12,700	1,02	40	**PHG 1030-H-...**
	210	105,00	2 667,00	4,30	2,29	6,12	1,02	12,700	1,02	40	**PHG 1050-H-...**
	217	108,50	2 755,90	4,30	2,29	6,12	1,02	12,700	1,02	40	**PHG 1085-H-...**
	220	110,00	2 794,00	4,30	2,29	6,12	1,02	12,700	1,02	40	**PHG 1100-H-...**
	224	112,00	2 844,80	4,30	2,29	6,12	1,02	12,700	1,02	40	**PHG 1120-H-...**
	228	114,00	2 895,60	4,30	2,29	6,12	1,02	12,700	1,02	40	**PHG 1140-H-...**
	230	115,00	2 921,00	4,30	2,29	6,12	1,02	12,700	1,02	40	**PHG 1150-H-...**
	234	117,00	2 971,80	4,30	2,29	6,12	1,02	12,700	1,02	40	**PHG 1170-H-...**
	235	117,50	2 984,50	4,30	2,29	6,12	1,02	12,700	1,02	40	**PHG 1175-H-...**
	240	120,00	3 048,00	4,30	2,29	6,12	1,02	12,700	1,02	40	**PHG 1200-H-...**
	250	125,00	3 175,00	4,30	2,29	6,12	1,02	12,700	1,02	40	**PHG 1250-H-...**
	252	126,00	3 200,40	4,30	2,29	6,12	1,02	12,700	1,02	40	**PHG 1260-H-...**
	254	127,00	3 225,80	4,30	2,29	6,12	1,02	12,700	1,02	40	**PHG 1270-H-...**
	265	132,50	3 365,50	4,30	2,29	6,12	1,02	12,700	1,02	40	**PHG 1325-H-...**
	270	135,00	3 429,00	4,30	2,29	6,12	1,02	12,700	1,02	40	**PHG 1350-H-...**
	272	136,00	3 454,40	4,30	2,29	6,12	1,02	12,700	1,02	40	**PHG 1360-H-...**
	276	138,00	3 505,20	4,30	2,29	6,12	1,02	12,700	1,02	40	**PHG 1380-H-...**
	280	140,00	3 556,00	4,30	2,29	6,12	1,02	12,700	1,02	40	**PHG 1400-H-...**
	288	144,00	3 657,60	4,30	2,29	6,12	1,02	12,700	1,02	40	**PHG 1440-H-...**
	290	145,00	3 683,00	4,30	2,29	6,12	1,02	12,700	1,02	40	**PHG 1450-H-...**
	292	146,00	3 708,40	4,30	2,29	6,12	1,02	12,700	1,02	40	**PHG 1460-H-...**
	302	151,00	3 835,40	4,30	2,29	6,12	1,02	12,700	1,02	40	**PHG 1510-H-...**
	307	153,50	3 898,90	4,30	2,29	6,12	1,02	12,700	1,02	40	**PHG 1535-H-...**
	310	155,00	3 937,00	4,30	2,29	6,12	1,02	12,700	1,02	40	**PHG 1550-H-...**
	312	156,00	3 962,40	4,30	2,29	6,12	1,02	12,700	1,02	40	**PHG 1560-H-...**
	320	160,00	4 064,00	4,30	2,29	6,12	1,02	12,700	1,02	40	**PHG 1600-H-...**
	326	163,00	4 140,20	4,30	2,29	6,12	1,02	12,700	1,02	40	**PHG 1630-H-...**
	332	166,00	4 216,40	4,30	2,29	6,12	1,02	12,700	1,02	40	**PHG 1660-H-...**
	336	168,00	4 267,20	4,30	2,29	6,12	1,02	12,700	1,02	40	**PHG 1680-H-...**
	340	170,00	4 318,00	4,30	2,29	6,12	1,02	12,700	1,02	40	**PHG 1700-H-...**
	350	175,00	4 445,00	4,30	2,29	6,12	1,02	12,700	1,02	40	**PHG 1750-H-...**
	353	176,50	4 483,10	4,30	2,29	6,12	1,02	12,700	1,02	40	**PHG 1765-H-...**
	371	185,50	4 711,70	4,30	2,29	6,12	1,02	12,700	1,02	40	**PHG 1855-H-...**
	402	201,00	5 105,40	4,30	2,29	6,12	1,02	12,700	1,02	40	**PHG 2010-H-...**
	410	205,00	5 207,00	4,30	2,29	6,12	1,02	12,700	1,02	40	**PHG 2050-H-...**
	440	220,00	5 588,00	4,30	2,29	6,12	1,02	12,700	1,02	40	**PHG 2200-H-...**
	442	221,00	5 613,40	4,30	2,29	6,12	1,02	12,700	1,02	40	**PHG 2210-H-...**
	472	236,00	5 994,40	4,30	2,29	6,12	1,02	12,700	1,02	40	**PHG 2360-H-...**
	500	250,00	6 350,00	4,30	2,29	6,12	1,02	12,700	1,02	40	**PHG 2500-H-...**
	520	260,00	6 604,00	4,30	2,29	6,12	1,02	12,700	1,02	40	**PHG 2600-H-...**
	536	268,00	6 807,20	4,30	2,29	6,12	1,02	12,700	1,02	40	**PHG 2680-H-...**
	540	270,00	6 858,00	4,30	2,29	6,12	1,02	12,700	1,02	40	**PHG 2700-H-...**
	544	272,00	6 908,80	4,30	2,29	6,12	1,02	12,700	1,02	40	**PHG 2720-H-...**
XH	53	46,38	1 117,93	11,20	6,35	12,57	1,57	22,225	1,19	40	**PHG 463-XH-...**
	58	50,75	1 289,05	11,20	6,35	12,57	1,57	22,225	1,19	40	**PHG 507-XH-...**
	58	50,80	1 290,32	11,20	6,35	12,57	1,57	22,225	1,19	40	**PHG 508-XH-...**
	64	56,00	1 422,40	11,20	6,35	12,57	1,57	22,225	1,19	40	**PHG 560-XH-...**
	65	56,88	1 444,63	11,20	6,35	12,57	1,57	22,225	1,19	40	**PHG 570-XH-...**
	66	57,55	1 466,85	11,20	6,35	12,57	1,57	22,225	1,19	40	**PHG 580-XH-...**
	69	60,38	1 533,53	11,20	6,35	12,57	1,57	22,225	1,19	40	**PHG 604-XH-...**
	72	63,00	1 600,20	11,20	6,35	12,57	1,57	22,225	1,19	40	**PHG 630-XH-...**

Non-standard lengths may also be available.
To complete designation, add three digits for belt width in 1/100ths of an inch; e.g. for a 1/4" width add 025 or for a 3/8" width add 037.
Full sleeves are available in various widths. Please contact your SKF Authorized Distributor.

Section	Number of teeth	Dimensions Pitch length		h_1	h_2	A	B	p	C	α	Designation
–	–	in.	mm							°	–
XH	80	70,00	1 778,00	11,20	6,35	12,57	1,57	22,225	1,19	40	**PHG 700-XH-...**
	81	71,00	1 803,40	11,20	6,35	12,57	1,57	22,225	1,19	40	**PHG 710-XH-...**
	84	73,50	1 866,90	11,20	6,35	12,57	1,57	22,225	1,19	40	**PHG 735-XH-...**
	86	75,25	1 911,35	11,20	6,35	12,57	1,57	22,225	1,19	40	**PHG 752-XH-...**
	88	77,00	1 955,80	11,20	6,35	12,57	1,57	22,225	1,19	40	**PHG 770-XH-...**
	91	79,63	2 022,48	11,20	6,35	12,57	1,57	22,225	1,19	40	**PHG 800-XH-...**
	92	80,50	2 044,70	11,20	6,35	12,57	1,57	22,225	1,19	40	**PHG 805-XH-...**
	96	84,00	2 133,60	11,20	6,35	12,57	1,57	22,225	1,19	40	**PHG 840-XH-...**
	103	90,13	2 289,18	11,20	6,35	12,57	1,57	22,225	1,19	40	**PHG 901-XH-...**
	105	91,88	2 333,63	11,20	6,35	12,57	1,57	22,225	1,19	40	**PHG 919-XH-...**
	106	92,75	2 355,85	11,20	6,35	12,57	1,57	22,225	1,19	40	**PHG 927-XH-...**
	112	98,00	2 489,20	11,20	6,35	12,57	1,57	22,225	1,19	40	**PHG 980-XH-...**
	114	99,75	2 533,65	11,20	6,35	12,57	1,57	22,225	1,19	40	**PHG 1000-XH-...**
	128	112,00	2 844,80	11,20	6,35	12,57	1,57	22,225	1,19	40	**PHG 1120-XH-...**
	144	126,00	3 200,40	11,20	6,35	12,57	1,57	22,225	1,19	40	**PHG 1260-XH-...**
	160	140,00	3 556,00	11,20	6,35	12,57	1,57	22,225	1,19	40	**PHG 1400-XH-...**
	176	154,00	3 911,60	11,20	6,35	12,57	1,57	22,225	1,19	40	**PHG 1540-XH-...**
	180	157,50	4 000,50	11,20	6,35	12,57	1,57	22,225	1,19	40	**PHG 1575-XH-...**
	200	175,00	4 445,00	11,20	6,35	12,57	1,57	22,225	1,19	40	**PHG 1750-XH-...**
	214	187,25	4 756,15	11,20	6,35	12,57	1,57	22,225	1,19	40	**PHG 1873-XH-...**
	260	227,50	5 778,50	11,20	6,35	12,57	1,57	22,225	1,19	40	**PHG 2275-XH-...**
XXH	50	62,50	1 587,50	15,70	9,53	19,05	2,29	31,750	1,52	40	**PHG 625-XXH-...**
	52	65,00	1 651,00	15,70	9,53	19,05	2,29	31,750	1,52	40	**PHG 650-XXH-...**
	56	70,00	1 778,00	15,70	9,53	19,05	2,29	31,750	1,52	40	**PHG 700-XXH-...**
	64	80,00	2 032,00	15,70	9,53	19,05	2,29	31,750	1,52	40	**PHG 800-XXH-...**
	72	90,00	2 286,00	15,70	9,53	19,05	2,29	31,750	1,52	40	**PHG 900-XXH-...**
	76	95,00	2 413,00	15,70	9,53	19,05	2,29	31,750	1,52	40	**PHG 950-XXH-...**
	80	100,00	2 540,00	15,70	9,53	19,05	2,29	31,750	1,52	40	**PHG 1000-XXH-...**
	84	105,00	2 667,00	15,70	9,53	19,05	2,29	31,750	1,52	40	**PHG 1050-XXH-...**
	96	120,00	3 048,00	15,70	9,53	19,05	2,29	31,750	1,52	40	**PHG 1200-XXH-...**
	100	125,00	3 175,00	15,70	9,53	19,05	2,29	31,750	1,52	40	**PHG 1250-XXH-...**
	112	140,00	3 556,00	15,70	9,53	19,05	2,29	31,750	1,52	40	**PHG 1400-XXH-...**
	125	156,25	3 968,75	15,70	9,53	19,05	2,29	31,750	1,52	40	**PHG 1563-XXH-...**
	128	160,00	4 064,00	15,70	9,53	19,05	2,29	31,750	1,52	40	**PHG 1600-XXH-...**
	136	170,00	4 318,00	15,70	9,53	19,05	2,29	31,750	1,52	40	**PHG 1700-XXH-...**
	144	180,00	4 572,00	15,70	9,53	19,05	2,29	31,750	1,52	40	**PHG 1800-XXH-...**
	154	192,50	4 889,50	15,70	9,53	19,05	2,29	31,750	1,52	40	**PHG 1925-XXH-...**
	160	200,00	5 080,00	15,70	9,53	19,05	2,29	31,750	1,52	40	**PHG 2000-XXH-...**

Non-standard lengths may also be available.
To complete designation, add three digits for belt width in 1/100ths of an inch; e.g. for a 1/4" width add 025 or for a 3/8" width add 037.
Full sleeves are available in various widths. Please contact your SKF Authorized Distributor.

SKF Double-sided Classical Timing Belts

D-XL

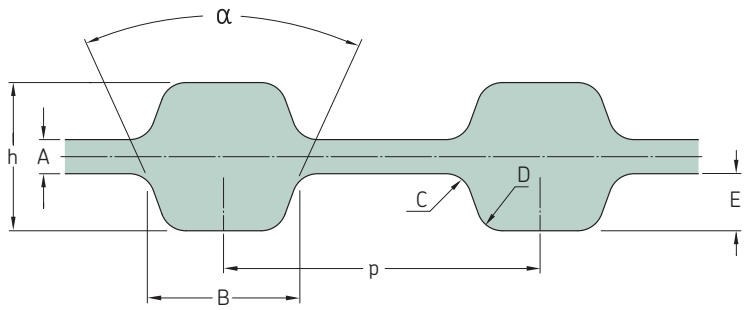

Section	Number of teeth per side	Dimensions Pitch length		h	A	B	C	D	p	E	α	Designation
–	–	in.	mm								°	–
D-XL	99	19,80	502,92	3,05	0,51	2,57	0,38	0,38	5,080	1,27	50	**PHG D-198-XL-...**
	100	20,00	508,00	3,05	0,51	2,57	0,38	0,38	5,080	1,27	50	**PHG D-200-XL-...**
	101	20,20	513,08	3,05	0,51	2,57	0,38	0,38	5,080	1,27	50	**PHG D-202-XL-...**
	103	20,60	523,24	3,05	0,51	2,57	0,38	0,38	5,080	1,27	50	**PHG D-206-XL-...**
	104	20,80	528,32	3,05	0,51	2,57	0,38	0,38	5,080	1,27	50	**PHG D-208-XL-...**
	105	21,00	533,40	3,05	0,51	2,57	0,38	0,38	5,080	1,27	50	**PHG D-210-XL-...**
	106	21,20	538,48	3,05	0,51	2,57	0,38	0,38	5,080	1,27	50	**PHG D-212-XL-...**
	107	21,40	543,56	3,05	0,51	2,57	0,38	0,38	5,080	1,27	50	**PHG D-214-XL-...**
	109	21,80	553,72	3,05	0,51	2,57	0,38	0,38	5,080	1,27	50	**PHG D-218-XL-...**
	110	22,00	558,80	3,05	0,51	2,57	0,38	0,38	5,080	1,27	50	**PHG D-220-XL-...**
	113	22,60	574,04	3,05	0,51	2,57	0,38	0,38	5,080	1,27	50	**PHG D-226-XL-...**
	114	22,80	579,12	3,05	0,51	2,57	0,38	0,38	5,080	1,27	50	**PHG D-228-XL-...**
	115	23,00	584,20	3,05	0,51	2,57	0,38	0,38	5,080	1,27	50	**PHG D-230-XL-...**
	117	23,40	594,36	3,05	0,51	2,57	0,38	0,38	5,080	1,27	50	**PHG D-234-XL-...**
	118	23,60	599,44	3,05	0,51	2,57	0,38	0,38	5,080	1,27	50	**PHG D-236-XL-...**
	120	24,00	609,60	3,05	0,51	2,57	0,38	0,38	5,080	1,27	50	**PHG D-240-XL-...**
	124	24,80	629,92	3,05	0,51	2,57	0,38	0,38	5,080	1,27	50	**PHG D-248-XL-...**
	125	25,00	635,00	3,05	0,51	2,57	0,38	0,38	5,080	1,27	50	**PHG D-250-XL-...**
	128	25,60	650,24	3,05	0,51	2,57	0,38	0,38	5,080	1,27	50	**PHG D-256-XL-...**
	130	26,00	660,40	3,05	0,51	2,57	0,38	0,38	5,080	1,27	50	**PHG D-260-XL-...**
	132	26,40	670,56	3,05	0,51	2,57	0,38	0,38	5,080	1,27	50	**PHG D-264-XL-...**
	135	27,00	685,80	3,05	0,51	2,57	0,38	0,38	5,080	1,27	50	**PHG D-270-XL-...**
	137	27,40	695,96	3,05	0,51	2,57	0,38	0,38	5,080	1,27	50	**PHG D-274-XL-...**
	138	27,60	701,04	3,05	0,51	2,57	0,38	0,38	5,080	1,27	50	**PHG D-276-XL-...**
	140	28,00	711,20	3,05	0,51	2,57	0,38	0,38	5,080	1,27	50	**PHG D-280-XL-...**
	141	28,20	716,28	3,05	0,51	2,57	0,38	0,38	5,080	1,27	50	**PHG D-282-XL-...**
	143	28,60	726,44	3,05	0,51	2,57	0,38	0,38	5,080	1,27	50	**PHG D-286-XL-...**
	145	29,00	736,60	3,05	0,51	2,57	0,38	0,38	5,080	1,27	50	**PHG D-290-XL-...**
	150	30,00	762,00	3,05	0,51	2,57	0,38	0,38	5,080	1,27	50	**PHG D-300-XL-...**
	152	30,40	772,16	3,05	0,51	2,57	0,38	0,38	5,080	1,27	50	**PHG D-304-XL-...**
	153	30,60	777,24	3,05	0,51	2,57	0,38	0,38	5,080	1,27	50	**PHG D-306-XL-...**
	155	31,00	787,40	3,05	0,51	2,57	0,38	0,38	5,080	1,27	50	**PHG D-310-XL-...**
	158	31,60	802,64	3,05	0,51	2,57	0,38	0,38	5,080	1,27	50	**PHG D-316-XL-...**
	160	32,00	812,80	3,05	0,51	2,57	0,38	0,38	5,080	1,27	50	**PHG D-320-XL-...**
	161	32,20	817,88	3,05	0,51	2,57	0,38	0,38	5,080	1,27	50	**PHG D-322-XL-...**
	163	32,60	828,04	3,05	0,51	2,57	0,38	0,38	5,080	1,27	50	**PHG D-326-XL-...**
	165	33,00	838,20	3,05	0,51	2,57	0,38	0,38	5,080	1,27	50	**PHG D-330-XL-...**
	170	34,00	863,60	3,05	0,51	2,57	0,38	0,38	5,080	1,27	50	**PHG D-340-XL-...**
	172	34,40	873,76	3,05	0,51	2,57	0,38	0,38	5,080	1,27	50	**PHG D-344-XL-...**
	174	34,80	883,92	3,05	0,51	2,57	0,38	0,38	5,080	1,27	50	**PHG D-348-XL-...**
	176	35,20	894,08	3,05	0,51	2,57	0,38	0,38	5,080	1,27	50	**PHG D-352-XL-...**
	178	35,60	904,24	3,05	0,51	2,57	0,38	0,38	5,080	1,27	50	**PHG D-356-XL-...**
	180	36,00	914,40	3,05	0,51	2,57	0,38	0,38	5,080	1,27	50	**PHG D-360-XL-...**
	181	36,00	914,40	3,05	0,51	2,57	0,38	0,38	5,080	1,27	50	**PHG D-362-XL-...**
	182	36,40	924,56	3,05	0,51	2,57	0,38	0,38	5,080	1,27	50	**PHG D-364-XL-...**
	185	37,00	939,80	3,05	0,51	2,57	0,38	0,38	5,080	1,27	50	**PHG D-370-XL-...**
	186	37,20	944,88	3,05	0,51	2,57	0,38	0,38	5,080	1,27	50	**PHG D-372-XL-...**
	188	37,60	955,04	3,05	0,51	2,57	0,38	0,38	5,080	1,27	50	**PHG D-376-XL-...**
	190	38,00	965,20	3,05	0,51	2,57	0,38	0,38	5,080	1,27	50	**PHG D-380-XL-...**
	192	38,40	975,36	3,05	0,51	2,57	0,38	0,38	5,080	1,27	50	**PHG D-384-XL-...**
	195	39,00	990,60	3,05	0,51	2,57	0,38	0,38	5,080	1,27	50	**PHG D-390-XL-...**
	196	39,20	995,68	3,05	0,51	2,57	0,38	0,38	5,080	1,27	50	**PHG D-392-XL-...**
	200	40,00	1 016,00	3,05	0,51	2,57	0,38	0,38	5,080	1,27	50	**PHG D-400-XL-...**
	206	41,20	1 046,48	3,05	0,51	2,57	0,38	0,38	5,080	1,27	50	**PHG D-412-XL-...**
	207	41,40	1 051,56	3,05	0,51	2,57	0,38	0,38	5,080	1,27	50	**PHG D-414-XL-...**

Non-standard lengths may also be available.
To complete designation add three digits for belt width in 1/100ths of an inch; e.g. for a 1/4" width add 025 or for a 3/8" width add 037.
Full sleeves are available in various widths. Please contact your SKF Authorized Distributor.

Section	Number of teeth per side	Dimensions Pitch length		h	A	B	C	D	p	E	α	Designation
–	–	in.	mm								°	–
D-XL	212	42,40	1 076,96	3,05	0,51	2,57	0,38	0,38	5,080	1,27	50	**PHG D-424-XL-...**
	215	43,00	1 092,20	3,05	0,51	2,57	0,38	0,38	5,080	1,27	50	**PHG D-430-XL-...**
	216	43,20	1 097,28	3,05	0,51	2,57	0,38	0,38	5,080	1,27	50	**PHG D-432-XL-...**
	217	43,40	1 102,36	3,05	0,51	2,57	0,38	0,38	5,080	1,27	50	**PHG D-434-XL-...**
	225	45,00	1 143,00	3,05	0,51	2,57	0,38	0,38	5,080	1,27	50	**PHG D-450-XL-...**
	230	46,00	1 168,40	3,05	0,51	2,57	0,38	0,38	5,080	1,27	50	**PHG D-460-XL-...**
	240	48,00	1 219,20	3,05	0,51	2,57	0,38	0,38	5,080	1,27	50	**PHG D-480-XL-...**
	245	49,00	1 244,60	3,05	0,51	2,57	0,38	0,38	5,080	1,27	50	**PHG D-490-XL-...**
	246	49,20	1 249,68	3,05	0,51	2,57	0,38	0,38	5,080	1,27	50	**PHG D-492-XL-...**
	257	51,40	1 305,56	3,05	0,51	2,57	0,38	0,38	5,080	1,27	50	**PHG D-514-XL-...**
	280	56,00	1 422,40	3,05	0,51	2,57	0,38	0,38	5,080	1,27	50	**PHG D-560-XL-...**
	282	56,40	1 432,56	3,05	0,51	2,57	0,38	0,38	5,080	1,27	50	**PHG D-564-XL-...**
	283	56,60	1 437,64	3,05	0,51	2,57	0,38	0,38	5,080	1,27	50	**PHG D-566-XL-...**
	287	57,40	1 457,96	3,05	0,51	2,57	0,38	0,38	5,080	1,27	50	**PHG D-574-XL-...**
	290	58,00	1 473,20	3,05	0,51	2,57	0,38	0,38	5,080	1,27	50	**PHG D-580-XL-...**
D-L	54	20,25	514,35	4,57	0,76	4,65	0,51	0,51	9,525	1,91	40	**PHG D-203-L-...**
	56	21,00	533,40	4,57	0,76	4,65	0,51	0,51	9,525	1,91	40	**PHG D-210-L-...**
	57	21,38	542,93	4,57	0,76	4,65	0,51	0,51	9,525	1,91	40	**PHG D-214-L-...**
	58	21,75	552,45	4,57	0,76	4,65	0,51	0,51	9,525	1,91	40	**PHG D-217-L-...**
	60	22,50	571,50	4,57	0,76	4,65	0,51	0,51	9,525	1,91	40	**PHG D-225-L-...**
	62	23,25	590,55	4,57	0,76	4,65	0,51	0,51	9,525	1,91	40	**PHG D-232-L-...**
	63	23,60	599,44	4,57	0,76	4,65	0,51	0,51	9,525	1,91	40	**PHG D-236-L-...**
	64	24,00	609,60	4,57	0,76	4,65	0,51	0,51	9,525	1,91	40	**PHG D-240-L-...**
	65	24,38	619,13	4,57	0,76	4,65	0,51	0,51	9,525	1,91	40	**PHG D-244-L-...**
	68	25,50	647,70	4,57	0,76	4,65	0,51	0,51	9,525	1,91	40	**PHG D-255-L-...**
	69	25,75	654,05	4,57	0,76	4,65	0,51	0,51	9,525	1,91	40	**PHG D-258-L-...**
	70	26,25	666,75	4,57	0,76	4,65	0,51	0,51	9,525	1,91	40	**PHG D-263-L-...**
	71	26,63	676,28	4,57	0,76	4,65	0,51	0,51	9,525	1,91	40	**PHG D-265-L-...**
	72	27,00	685,80	4,57	0,76	4,65	0,51	0,51	9,525	1,91	40	**PHG D-270-L-...**
	73	27,38	695,33	4,57	0,76	4,65	0,51	0,51	9,525	1,91	40	**PHG D-275-L-...**
	74	27,75	704,85	4,57	0,76	4,65	0,51	0,51	9,525	1,91	40	**PHG D-277-L-...**
	75	28,13	714,38	4,57	0,76	4,65	0,51	0,51	9,525	1,91	40	**PHG D-280-L-...**
	76	28,50	723,90	4,57	0,76	4,65	0,51	0,51	9,525	1,91	40	**PHG D-285-L-...**
	80	30,00	762,00	4,57	0,76	4,65	0,51	0,51	9,525	1,91	40	**PHG D-300-L-...**
	81	30,38	771,53	4,57	0,76	4,65	0,51	0,51	9,525	1,91	40	**PHG D-304-L-...**
	84	31,50	800,10	4,57	0,76	4,65	0,51	0,51	9,525	1,91	40	**PHG D-315-L-...**
	85	31,88	809,63	4,57	0,76	4,65	0,51	0,51	9,525	1,91	40	**PHG D-320-L-...**
	86	32,25	819,15	4,57	0,76	4,65	0,51	0,51	9,525	1,91	40	**PHG D-322-L-...**
	87	32,63	828,68	4,57	0,76	4,65	0,51	0,51	9,525	1,91	40	**PHG D-328-L-...**
	88	33,00	838,20	4,57	0,76	4,65	0,51	0,51	9,525	1,91	40	**PHG D-330-L-...**
	89	33,38	847,73	4,57	0,76	4,65	0,51	0,51	9,525	1,91	40	**PHG D-334-L-...**
	90	33,75	857,25	4,57	0,76	4,65	0,51	0,51	9,525	1,91	40	**PHG D-337-L-...**
	91	34,13	866,78	4,57	0,76	4,65	0,51	0,51	9,525	1,91	40	**PHG D-341-L-...**
	92	34,50	876,30	4,57	0,76	4,65	0,51	0,51	9,525	1,91	40	**PHG D-345-L-...**
	94	35,25	895,35	4,57	0,76	4,65	0,51	0,51	9,525	1,91	40	**PHG D-352-L-...**
	96	36,00	914,40	4,57	0,76	4,65	0,51	0,51	9,525	1,91	40	**PHG D-360-L-...**
	98	36,75	933,45	4,57	0,76	4,65	0,51	0,51	9,525	1,91	40	**PHG D-367-L-...**
	99	37,13	942,98	4,57	0,76	4,65	0,51	0,51	9,525	1,91	40	**PHG D-371-L-...**
	100	37,50	952,50	4,57	0,76	4,65	0,51	0,51	9,525	1,91	40	**PHG D-375-L-...**
	102	38,25	971,55	4,57	0,76	4,65	0,51	0,51	9,525	1,91	40	**PHG D-382-L-...**
	103	38,63	981,08	4,57	0,76	4,65	0,51	0,51	9,525	1,91	40	**PHG D-387-L-...**
	104	39,00	990,60	4,57	0,76	4,65	0,51	0,51	9,525	1,91	40	**PHG D-390-L-...**
	105	39,38	1 000,13	4,57	0,76	4,65	0,51	0,51	9,525	1,91	40	**PHG D-394-L-...**
	106	39,75	1 009,65	4,57	0,76	4,65	0,51	0,51	9,525	1,91	40	**PHG D-397-L-...**
	108	40,50	1 028,70	4,57	0,76	4,65	0,51	0,51	9,525	1,91	40	**PHG D-405-L-...**
	109	40,88	1 038,23	4,57	0,76	4,65	0,51	0,51	9,525	1,91	40	**PHG D-408-L-...**
	110	41,25	1 047,75	4,57	0,76	4,65	0,51	0,51	9,525	1,91	40	**PHG D-412-L-...**
	112	42,00	1 066,80	4,57	0,76	4,65	0,51	0,51	9,525	1,91	40	**PHG D-420-L-...**
	114	42,75	1 085,85	4,57	0,76	4,65	0,51	0,51	9,525	1,91	40	**PHG D-427-L-...**
	116	43,50	1 104,90	4,57	0,76	4,65	0,51	0,51	9,525	1,91	40	**PHG D-435-L-...**
	117	43,88	1 114,43	4,57	0,76	4,65	0,51	0,51	9,525	1,91	40	**PHG D-439-L-...**
	118	44,25	1 123,95	4,57	0,76	4,65	0,51	0,51	9,525	1,91	40	**PHG D-442-L-...**
	120	45,00	1 143,00	4,57	0,76	4,65	0,51	0,51	9,525	1,91	40	**PHG D-450-L-...**
	121	45,38	1 152,53	4,57	0,76	4,65	0,51	0,51	9,525	1,91	40	**PHG D-453-L-...**
	123	46,13	1 171,70	4,57	0,76	4,65	0,51	0,51	9,525	1,91	40	**PHG D-461-L-...**
	124	46,50	1 181,10	4,57	0,76	4,65	0,51	0,51	9,525	1,91	40	**PHG D-465-L-...**
	128	48,00	1 219,20	4,57	0,76	4,65	0,51	0,51	9,525	1,91	40	**PHG D-480-L-...**
	132	49,50	1 257,30	4,57	0,76	4,65	0,51	0,51	9,525	1,91	40	**PHG D-495-L-...**
	133	50,00	1 270,00	4,57	0,76	4,65	0,51	0,51	9,525	1,91	40	**PHG D-500-L-...**
	136	51,00	1 295,40	4,57	0,76	4,65	0,51	0,51	9,525	1,91	40	**PHG D-510-L-...**
	138	51,80	1 315,72	4,57	0,76	4,65	0,51	0,51	9,525	1,91	40	**PHG D-518-L-...**
	140	52,50	1 333,50	4,57	0,76	4,65	0,51	0,51	9,525	1,91	40	**PHG D-525-L-...**
	144	54,00	1 371,60	4,57	0,76	4,65	0,51	0,51	9,525	1,91	40	**PHG D-540-L-...**
	146	54,75	1 390,65	4,57	0,76	4,65	0,51	0,51	9,525	1,91	40	**PHG D-548-L-...**
	148	55,50	1 409,70	4,57	0,76	4,65	0,51	0,51	9,525	1,91	40	**PHG D-555-L-...**
	152	57,00	1 447,80	4,57	0,76	4,65	0,51	0,51	9,525	1,91	40	**PHG D-570-L-...**

Non-standard lengths may also be available.
To complete designation add three digits for belt width in 1/100ths of an inch; e.g. for a 1/4" width add 025 or for a 3/8" width add 037.
Full sleeves are available in various widths. Please contact your SKF Authorized Distributor.

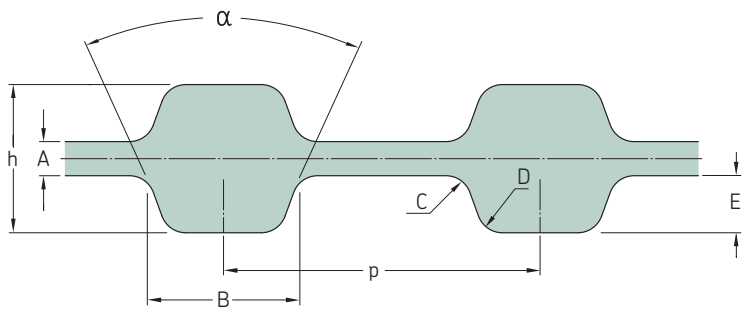

Section	Number of teeth per side	Dimensions Pitch length		h	A	B	C	D	p	E	α	Designation
–	–	in.	mm								°	–
D-L	153	57,38	1 457,33	4,57	0,76	4,65	0,51	0,51	9,525	1,91	40	**PHG D-574-L-...**
	155	58,13	1 476,38	4,57	0,76	4,65	0,51	0,51	9,525	1,91	40	**PHG D-581-L-...**
	156	58,50	1 485,90	4,57	0,76	4,65	0,51	0,51	9,525	1,91	40	**PHG D-585-L-...**
	160	60,00	1 524,00	4,57	0,76	4,65	0,51	0,51	9,525	1,91	40	**PHG D-600-L-...**
	165	61,90	1 572,26	4,57	0,76	4,65	0,51	0,51	9,525	1,91	40	**PHG D-619-L-...**
	168	63,00	1 600,20	4,57	0,76	4,65	0,51	0,51	9,525	1,91	40	**PHG D-630-L-...**
	169	63,40	1 610,36	4,57	0,76	4,65	0,51	0,51	9,525	1,91	40	**PHG D-634-L-...**
	176	66,00	1 676,40	4,57	0,76	4,65	0,51	0,51	9,525	1,91	40	**PHG D-660-L-...**
D-H	40	20,00	508,00	5,95	1,37	6,12	1,02	1,02	12,700	2,29	40	**PHG D-200-H-...**
	41	20,50	520,70	5,95	1,37	6,12	1,02	1,02	12,700	2,29	40	**PHG D-205-H-...**
	42	21,00	533,40	5,95	1,37	6,12	1,02	1,02	12,700	2,29	40	**PHG D-210-H-...**
	44	22,00	558,80	5,95	1,37	6,12	1,02	1,02	12,700	2,29	40	**PHG D-220-H-...**
	45	22,50	571,50	5,95	1,37	6,12	1,02	1,02	12,700	2,29	40	**PHG D-225-H-...**
	46	23,00	584,20	5,95	1,37	6,12	1,02	1,02	12,700	2,29	40	**PHG D-230-H-...**
	48	24,00	609,60	5,95	1,37	6,12	1,02	1,02	12,700	2,29	40	**PHG D-240-H-...**
	49	24,50	622,30	5,95	1,37	6,12	1,02	1,02	12,700	2,29	40	**PHG D-245-H-...**
	49	24,50	622,30	5,95	1,37	6,12	1,02	1,02	12,700	2,29	40	**PHG D-245-H-...**
	50	25,00	635,00	5,95	1,37	6,12	1,02	1,02	12,700	2,29	40	**PHG D-250-H-...**
	51	25,50	647,70	5,95	1,37	6,12	1,02	1,02	12,700	2,29	40	**PHG D-255-H-...**
	52	26,00	660,40	5,95	1,37	6,12	1,02	1,02	12,700	2,29	40	**PHG D-260-H-...**
	54	27,00	685,80	5,95	1,37	6,12	1,02	1,02	12,700	2,29	40	**PHG D-270-H-...**
	56	28,00	711,20	5,95	1,37	6,12	1,02	1,02	12,700	2,29	40	**PHG D-280-H-...**
	57	28,50	723,90	5,95	1,37	6,12	1,02	1,02	12,700	2,29	40	**PHG D-285-H-...**
	58	29,00	736,60	5,95	1,37	6,12	1,02	1,02	12,700	2,29	40	**PHG D-290-H-...**
	60	30,00	762,00	5,95	1,37	6,12	1,02	1,02	12,700	2,29	40	**PHG D-300-H-...**
	62	31,00	787,40	5,95	1,37	6,12	1,02	1,02	12,700	2,29	40	**PHG D-310-H-...**
	63	31,50	800,10	5,95	1,37	6,12	1,02	1,02	12,700	2,29	40	**PHG D-315-H-...**
	64	32,00	812,80	5,95	1,37	6,12	1,02	1,02	12,700	2,29	40	**PHG D-320-H-...**
	65	32,50	825,50	5,95	1,37	6,12	1,02	1,02	12,700	2,29	40	**PHG D-325-H-...**
	66	33,00	838,20	5,95	1,37	6,12	1,02	1,02	12,700	2,29	40	**PHG D-330-H-...**
	67	33,50	850,90	5,95	1,37	6,12	1,02	1,02	12,700	2,29	40	**PHG D-335-H-...**
	68	34,00	863,60	5,95	1,37	6,12	1,02	1,02	12,700	2,29	40	**PHG D-340-H-...**
	69	34,50	876,30	5,95	1,37	6,12	1,02	1,02	12,700	2,29	40	**PHG D-345-H-...**
	70	35,00	889,00	5,95	1,37	6,12	1,02	1,02	12,700	2,29	40	**PHG D-350-H-...**
	71	35,50	901,70	5,95	1,37	6,12	1,02	1,02	12,700	2,29	40	**PHG D-355-H-...**
	72	36,00	914,40	5,95	1,37	6,12	1,02	1,02	12,700	2,29	40	**PHG D-360-H-...**
	73	36,50	927,10	5,95	1,37	6,12	1,02	1,02	12,700	2,29	40	**PHG D-365-H-...**
	74	37,00	939,80	5,95	1,37	6,12	1,02	1,02	12,700	2,29	40	**PHG D-370-H-...**
	75	37,50	952,50	5,95	1,37	6,12	1,02	1,02	12,700	2,29	40	**PHG D-375-H-...**
	76	38,00	965,20	5,95	1,37	6,12	1,02	1,02	12,700	2,29	40	**PHG D-380-H-...**
	78	39,00	990,60	5,95	1,37	6,12	1,02	1,02	12,700	2,29	40	**PHG D-390-H-...**
	79	39,50	1 003,30	5,95	1,37	6,12	1,02	1,02	12,700	2,29	40	**PHG D-395-H-...**
	80	40,00	1 016,00	5,95	1,37	6,12	1,02	1,02	12,700	2,29	40	**PHG D-400-H-...**
	81	40,50	1 028,70	5,95	1,37	6,12	1,02	1,02	12,700	2,29	40	**PHG D-405-H-...**
	82	41,00	1 041,40	5,95	1,37	6,12	1,02	1,02	12,700	2,29	40	**PHG D-410-H-...**
	84	42,00	1 066,80	5,95	1,37	6,12	1,02	1,02	12,700	2,29	40	**PHG D-420-H-...**
	85	42,50	1 079,50	5,95	1,37	6,12	1,02	1,02	12,700	2,29	40	**PHG D-425-H-...**
	86	43,00	1 092,20	5,95	1,37	6,12	1,02	1,02	12,700	2,29	40	**PHG D-430-H-...**
	89	44,50	1 130,30	5,95	1,37	6,12	1,02	1,02	12,700	2,29	40	**PHG D-445-H-...**
	90	45,00	1 143,00	5,95	1,37	6,12	1,02	1,02	12,700	2,29	40	**PHG D-450-H-...**
	92	46,00	1 168,40	5,95	1,37	6,12	1,02	1,02	12,700	2,29	40	**PHG D-460-H-...**
	93	46,50	1 181,10	5,95	1,37	6,12	1,02	1,02	12,700	2,29	40	**PHG D-465-H-...**
	94	47,00	1 193,80	5,95	1,37	6,12	1,02	1,02	12,700	2,29	40	**PHG D-470-H-...**
	96	48,00	1 219,20	5,95	1,37	6,12	1,02	1,02	12,700	2,29	40	**PHG D-480-H-...**

Non-standard lengths may also be available.
To complete designation add three digits for belt width in 1/100ths of an inch; e.g. for a 1/4" width add 025 or for a 3/8" width add 037.
Full sleeves are available in various widths. Please contact your SKF Authorized Distributor.

Section	Number of teeth per side	Dimensions Pitch length		h	A	B	C	D	p	E	α	Designation
–	–	in.	mm								°	–
D-H	97	48,50	1 231,90	5,95	1,37	6,12	1,02	1,02	12,700	2,29	40	**PHG D-485-H...**
	98	49,00	1 244,60	5,95	1,37	6,12	1,02	1,02	12,700	2,29	40	**PHG D-490-H-...**
	100	50,00	1 270,00	5,95	1,37	6,12	1,02	1,02	12,700	2,29	40	**PHG D-500-H-...**
	102	51,00	1 295,40	5,95	1,37	6,12	1,02	1,02	12,700	2,29	40	**PHG D-510-H-...**
	103	51,50	1 308,10	5,95	1,37	6,12	1,02	1,02	12,700	2,29	40	**PHG D-515-H-...**
	104	52,00	1 320,80	5,95	1,37	6,12	1,02	1,02	12,700	2,29	40	**PHG D-520-H-...**
	105	52,50	1 333,50	5,95	1,37	6,12	1,02	1,02	12,700	2,29	40	**PHG D-525-H-...**
	106	53,00	1 346,20	5,95	1,37	6,12	1,02	1,02	12,700	2,29	40	**PHG D-530-H-...**
	107	53,50	1 358,90	5,95	1,37	6,12	1,02	1,02	12,700	2,29	40	**PHG D-535-H-...**
	108	54,00	1 371,60	5,95	1,37	6,12	1,02	1,02	12,700	2,29	40	**PHG D-540-H-...**
	110	55,00	1 397,00	5,95	1,37	6,12	1,02	1,02	12,700	2,29	40	**PHG D-550-H-...**
	111	55,00	1 397,00	5,95	1,37	6,12	1,02	1,02	12,700	2,29	40	**PHG D-555-H-...**
	112	56,00	1 422,40	5,95	1,37	6,12	1,02	1,02	12,700	2,29	40	**PHG D-560-H-...**
	113	56,50	1 435,10	5,95	1,37	6,12	1,02	1,02	12,700	2,29	40	**PHG D-565-H-...**
	114	57,00	1 447,80	5,95	1,37	6,12	1,02	1,02	12,700	2,29	40	**PHG D-570-H-...**
	116	58,00	1 473,20	5,95	1,37	6,12	1,02	1,02	12,700	2,29	40	**PHG D-580-H-...**
	117	58,50	1 485,90	5,95	1,37	6,12	1,02	1,02	12,700	2,29	40	**PHG D-585-H-...**
	118	59,00	1 498,60	5,95	1,37	6,12	1,02	1,02	12,700	2,29	40	**PHG D-590-H-...**
	120	60,00	1 524,00	5,95	1,37	6,12	1,02	1,02	12,700	2,29	40	**PHG D-600-H-...**
	121	60,50	1 536,70	5,95	1,37	6,12	1,02	1,02	12,700	2,29	40	**PHG D-605-H-...**
	122	61,00	1 549,40	5,95	1,37	6,12	1,02	1,02	12,700	2,29	40	**PHG D-610-H-...**
	125	62,50	1 587,50	5,95	1,37	6,12	1,02	1,02	12,700	2,29	40	**PHG D-625-H-...**
	126	63,00	1 600,20	5,95	1,37	6,12	1,02	1,02	12,700	2,29	40	**PHG D-630-H-...**
	128	64,00	1 625,60	5,95	1,37	6,12	1,02	1,02	12,700	2,29	40	**PHG D-640-H-...**
	130	65,00	1 651,00	5,95	1,37	6,12	1,02	1,02	12,700	2,29	40	**PHG D-650-H-...**
	132	66,00	1 676,40	5,95	1,37	6,12	1,02	1,02	12,700	2,29	40	**PHG D-660-H-...**
	134	67,00	1 701,80	5,95	1,37	6,12	1,02	1,02	12,700	2,29	40	**PHG D-670-H-...**
	136	68,00	1 727,20	5,95	1,37	6,12	1,02	1,02	12,700	2,29	40	**PHG D-680-H-...**
	138	69,00	1 752,60	5,95	1,37	6,12	1,02	1,02	12,700	2,29	40	**PHG D-690-H-...**
	139	69,50	1 765,30	5,95	1,37	6,12	1,02	1,02	12,700	2,29	40	**PHG D-695-H-...**
	140	70,00	1 778,00	5,95	1,37	6,12	1,02	1,02	12,700	2,29	40	**PHG D-700-H-...**
	142	71,00	1 803,40	5,95	1,37	6,12	1,02	1,02	12,700	2,29	40	**PHG D-710-H-...**
	144	72,00	1 828,80	5,95	1,37	6,12	1,02	1,02	12,700	2,29	40	**PHG D-720-H-...**
	145	72,50	1 841,50	5,95	1,37	6,12	1,02	1,02	12,700	2,29	40	**PHG D-725-H-...**
	146	73,00	1 854,20	5,95	1,37	6,12	1,02	1,02	12,700	2,29	40	**PHG D-730-H-...**
	148	74,00	1 879,60	5,95	1,37	6,12	1,02	1,02	12,700	2,29	40	**PHG D-740-H-...**
	150	75,00	1 905,00	5,95	1,37	6,12	1,02	1,02	12,700	2,29	40	**PHG D-750-H-...**
	154	77,00	1 955,80	5,95	1,37	6,12	1,02	1,02	12,700	2,29	40	**PHG D-770-H-...**
	155	77,50	1 968,50	5,95	1,37	6,12	1,02	1,02	12,700	2,29	40	**PHG D-775-H-...**
	157	78,50	1 993,90	5,95	1,37	6,12	1,02	1,02	12,700	2,29	40	**PHG D-785-H-...**
	160	80,00	2 032,00	5,95	1,37	6,12	1,02	1,02	12,700	2,29	40	**PHG D-800-H-...**
	162	81,00	2 057,40	5,95	1,37	6,12	1,02	1,02	12,700	2,29	40	**PHG D-810-H-...**
	164	82,00	2 082,80	5,95	1,37	6,12	1,02	1,02	12,700	2,29	40	**PHG D-820-H-...**
	166	83,00	2 108,20	5,95	1,37	6,12	1,02	1,02	12,700	2,29	40	**PHG D-830-H-...**
	168	84,00	2 133,60	5,95	1,37	6,12	1,02	1,02	12,700	2,29	40	**PHG D-840-H-...**
	170	85,00	2 159,00	5,95	1,37	6,12	1,02	1,02	12,700	2,29	40	**PHG D-850-H-...**
	172	86,00	2 184,40	5,95	1,37	6,12	1,02	1,02	12,700	2,29	40	**PHG D-860-H-...**
	176	88,00	2 235,20	5,95	1,37	6,12	1,02	1,02	12,700	2,29	40	**PHG D-880-H-...**
	179	89,50	2 273,30	5,95	1,37	6,12	1,02	1,02	12,700	2,29	40	**PHG D-895-H-...**
	180	90,00	2 286,00	5,95	1,37	6,12	1,02	1,02	12,700	2,29	40	**PHG D-900-H-...**
	184	92,00	2 336,80	5,95	1,37	6,12	1,02	1,02	12,700	2,29	40	**PHG D-920-H-...**
	186	93,00	2 362,20	5,95	1,37	6,12	1,02	1,02	12,700	2,29	40	**PHG D-930-H-...**
	190	95,00	2 413,00	5,95	1,37	6,12	1,02	1,02	12,700	2,29	40	**PHG D-950-H-...**
	192	96,00	2 438,40	5,95	1,37	6,12	1,02	1,02	12,700	2,29	40	**PHG D-960-H-...**
	196	98,00	2 489,20	5,95	1,37	6,12	1,02	1,02	12,700	2,29	40	**PHG D-980-H-...**
	197	98,50	2 501,90	5,95	1,37	6,12	1,02	1,02	12,700	2,29	40	**PHG D-985-H-...**
	200	100,00	2 540,00	5,95	1,37	6,12	1,02	1,02	12,700	2,29	40	**PHG D-1000-H-...**
	204	102,00	2 590,80	5,95	1,37	6,12	1,02	1,02	12,700	2,29	40	**PHG D-1020-H-...**
	206	103,00	2 616,20	5,95	1,37	6,12	1,02	1,02	12,700	2,29	40	**PHG D-1030-H-...**
	210	105,00	2 667,00	5,95	1,37	6,12	1,02	1,02	12,700	2,29	40	**PHG D-1050-H-...**
	217	108,50	2 755,90	5,95	1,37	6,12	1,02	1,02	12,700	2,29	40	**PHG D-1085-H-...**
	220	110,00	2 794,00	5,95	1,37	6,12	1,02	1,02	12,700	2,29	40	**PHG D-1100-H-...**
	224	112,00	2 844,80	5,95	1,37	6,12	1,02	1,02	12,700	2,29	40	**PHG D-1120-H-...**
	226	113,00	2 870,20	5,95	1,37	6,12	1,02	1,02	12,700	2,29	40	**PHG D-1130-H-...**
	228	114,00	2 895,60	5,95	1,37	6,12	1,02	1,02	12,700	2,29	40	**PHG D-1140-H-...**
	230	115,00	2 921,00	5,95	1,37	6,12	1,02	1,02	12,700	2,29	40	**PHG D-1150-H-...**
	234	117,00	2 971,80	5,95	1,37	6,12	1,02	1,02	12,700	2,29	40	**PHG D-1170-H-...**
	235	117,50	2 984,50	5,95	1,37	6,12	1,02	1,02	12,700	2,29	40	**PHG D-1175-H-...**
	240	120,00	3 048,00	5,95	1,37	6,12	1,02	1,02	12,700	2,29	40	**PHG D-1200-H-...**
	250	125,00	3 175,00	5,95	1,37	6,12	1,02	1,02	12,700	2,29	40	**PHG D-1250-H-...**
	252	126,00	3 200,40	5,95	1,37	6,12	1,02	1,02	12,700	2,29	40	**PHG D-1260-H-...**
	254	127,00	3 225,80	5,95	1,37	6,12	1,02	1,02	12,700	2,29	40	**PHG D-1270-H-...**
	265	132,50	3 365,50	5,95	1,37	6,12	1,02	1,02	12,700	2,29	40	**PHG D-1325-H-...**
	270	135,00	3 429,00	5,95	1,37	6,12	1,02	1,02	12,700	2,29	40	**PHG D-1350-H-...**
	272	136,00	3 454,40	5,95	1,37	6,12	1,02	1,02	12,700	2,29	40	**PHG D-1360-H-...**
	276	138,00	3 505,20	5,95	1,37	6,12	1,02	1,02	12,700	2,29	40	**PHG D-1380-H-...**

Non-standard lengths may also be available.
To complete designation add three digits for belt width in 1/100ths of an inch; e.g. for a 1/4" width add 025 or for a 3/8" width add 037.
Full sleeves are available in various widths. Please contact your SKF Authorized Distributor.

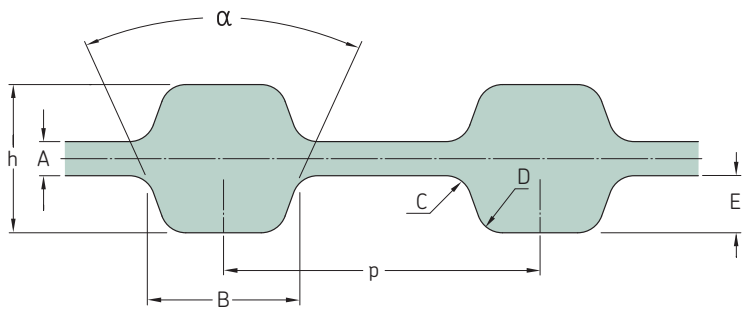

Section	Number of teeth per side	Dimensions Pitch length		h	A	B	C	D	p	E	α	Designation
–	–	in.	mm								°	–
D-H	280	140,00	3 556,00	5,95	1,37	6,12	1,02	1,02	12,700	2,29	40	**PHG D-1400-H-...**
	288	144,00	3 657,60	5,95	1,37	6,12	1,02	1,02	12,700	2,29	40	**PHG D-1440-H-...**
	290	145,00	3 683,00	5,95	1,37	6,12	1,02	1,02	12,700	2,29	40	**PHG D-1450-H-...**
	292	146,00	3 708,40	5,95	1,37	6,12	1,02	1,02	12,700	2,29	40	**PHG D-1460-H-...**
	302	151,00	3 835,40	5,95	1,37	6,12	1,02	1,02	12,700	2,29	40	**PHG D-1510-H-...**
	307	153,50	3 898,90	5,95	1,37	6,12	1,02	1,02	12,700	2,29	40	**PHG D-1535-H-...**
	310	155,00	3 937,00	5,95	1,37	6,12	1,02	1,02	12,700	2,29	40	**PHG D-1550-H-...**
	312	156,00	3 962,40	5,95	1,37	6,12	1,02	1,02	12,700	2,29	40	**PHG D-1560-H-...**
	320	160,00	4 064,00	5,95	1,37	6,12	1,02	1,02	12,700	2,29	40	**PHG D-1600-H-...**
	326	163,00	4 140,20	5,95	1,37	6,12	1,02	1,02	12,700	2,29	40	**PHG D-1630-H-...**
	332	166,00	4 216,40	5,95	1,37	6,12	1,02	1,02	12,700	2,29	40	**PHG D-1660-H-...**
	336	168,00	4 267,20	5,95	1,37	6,12	1,02	1,02	12,700	2,29	40	**PHG D-1680-H-...**
	340	170,00	4 318,00	5,95	1,37	6,12	1,02	1,02	12,700	2,29	40	**PHG D-1700-H-...**
	350	175,00	4 445,00	5,95	1,37	6,12	1,02	1,02	12,700	2,29	40	**PHG D-1750-H-...**
	353	176,50	4 483,10	5,95	1,37	6,12	1,02	1,02	12,700	2,29	40	**PHG D-1765-H-...**
	371	185,50	4 711,70	5,95	1,37	6,12	1,02	1,02	12,700	2,29	40	**PHG D-1855-H-...**
	440	220,00	5 588,00	5,95	1,37	6,12	1,02	1,02	12,700	2,29	40	**PHG D-2200-H-...**
	442	221,00	5 613,40	5,95	1,37	6,12	1,02	1,02	12,700	2,29	40	**PHG D-2210-H-...**
	472	236,00	5 994,40	5,95	1,37	6,12	1,02	1,02	12,700	2,29	40	**PHG D-2360-H-...**
	500	250,00	6 350,00	5,95	1,37	6,12	1,02	1,02	12,700	2,29	40	**PHG D-2500-H-...**
	520	260,00	6 604,00	5,95	1,37	6,12	1,02	1,02	12,700	2,29	40	**PHG D-2600-H-...**
	536	268,00	6 807,20	5,95	1,37	6,12	1,02	1,02	12,700	2,29	40	**PHG D-2680-H-...**
	540	270,00	6 858,00	5,95	1,37	6,12	1,02	1,02	12,700	2,29	40	**PHG D-2700-H-...**
	544	272,00	6 908,80	5,95	1,37	6,12	1,02	1,02	12,700	2,29	40	**PHG D-2720-H-...**

Non-standard lengths may also be available.
To complete designation add three digits for belt width in 1/100ths of an inch; e.g. for a 1/4" width add 025 or for a 3/8" width add 037.
Full sleeves are available in various widths. Please contact your SKF Authorized Distributor.

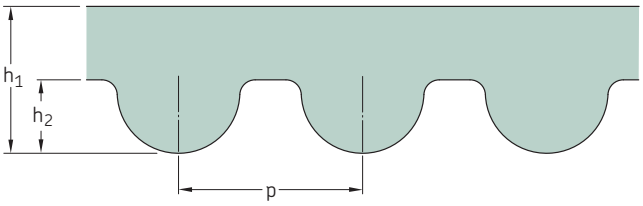

Section	Number of teeth per side	Dimensions Pitch length	h_1	h_2	p	Designation
–	–	mm				–
3M	20	60	2,4	1,20	3,0	**PHG 60-3M-...**
	27	81	2,4	1,20	3,0	**PHG 81-3M-...**
	29	87	2,4	1,20	3,0	**PHG 87-3M-...**
	30	90	2,4	1,20	3,0	**PHG 90-3M-...**
	33	99	2,4	1,20	3,0	**PHG 99-3M-...**
	34	102	2,4	1,20	3,0	**PHG 102-3M-...**
	37	111	2,4	1,20	3,0	**PHG 111-3M-...**
	39	117	2,4	1,20	3,0	**PHG 117-3M-...**
	40	120	2,4	1,20	3,0	**PHG 120-3M-...**
	43	129	2,4	1,20	3,0	**PHG 129-3M-...**
	44	132	2,4	1,20	3,0	**PHG 132-3M-...**
	46	138	2,4	1,20	3,0	**PHG 138-3M-...**
	47	141	2,4	1,20	3,0	**PHG 141-3M-...**
	48	144	2,4	1,20	3,0	**PHG 144-3M-...**
	50	150	2,4	1,20	3,0	**PHG 150-3M-...**
	51	153	2,4	1,20	3,0	**PHG 153-3M-...**
	52	156	2,4	1,20	3,0	**PHG 156-3M-...**
	53	159	2,4	1,20	3,0	**PHG 159-3M-...**
	54	162	2,4	1,20	3,0	**PHG 162-3M-...**
	55	165	2,4	1,20	3,0	**PHG 165-3M-...**
	56	168	2,4	1,20	3,0	**PHG 168-3M-...**
	57	171	2,4	1,20	3,0	**PHG 171-3M-...**
	58	174	2,4	1,20	3,0	**PHG 174-3M-...**
	59	177	2,4	1,20	3,0	**PHG 177-3M-...**
	60	180	2,4	1,20	3,0	**PHG 180-3M-...**
	61	183	2,4	1,20	3,0	**PHG 183-3M-...**
	62	186	2,4	1,20	3,0	**PHG 186-3M-...**
	63	189	2,4	1,20	3,0	**PHG 189-3M-...**
	64	192	2,4	1,20	3,0	**PHG 192-3M-...**
	65	195	2,4	1,20	3,0	**PHG 195-3M-...**
	66	198	2,4	1,20	3,0	**PHG 198-3M-...**
	67	201	2,4	1,20	3,0	**PHG 201-3M-...**
	68	204	2,4	1,20	3,0	**PHG 204-3M-...**
	69	207	2,4	1,20	3,0	**PHG 207-3M-...**
	70	210	2,4	1,20	3,0	**PHG 210-3M-...**
	71	213	2,4	1,20	3,0	**PHG 213-3M-...**
	74	222	2,4	1,20	3,0	**PHG 222-3M-...**
	75	225	2,4	1,20	3,0	**PHG 225-3M-...**
	76	228	2,4	1,20	3,0	**PHG 228-3M-...**
	78	234	2,4	1,20	3,0	**PHG 234-3M-...**
	79	237	2,4	1,20	3,0	**PHG 237-3M-...**
	80	240	2,4	1,20	3,0	**PHG 240-3M-...**
	82	246	2,4	1,20	3,0	**PHG 246-3M-...**
	83	249	2,4	1,20	3,0	**PHG 249-3M-...**
	84	252	2,4	1,20	3,0	**PHG 252-3M-...**
	85	255	2,4	1,20	3,0	**PHG 255-3M-...**
	86	258	2,4	1,20	3,0	**PHG 258-3M-...**
	87	261	2,4	1,20	3,0	**PHG 261-3M-...**
	88	264	2,4	1,20	3,0	**PHG 264-3M-...**
	89	267	2,4	1,20	3,0	**PHG 267-3M-...**
	90	270	2,4	1,20	3,0	**PHG 270-3M-...**
	92	276	2,4	1,20	3,0	**PHG 276-3M-...**
	94	282	2,4	1,20	3,0	**PHG 282-3M-...**
	95	285	2,4	1,20	3,0	**PHG 285-3M-...**
	96	288	2,4	1,20	3,0	**PHG 288-3M-...**

Section	Number of teeth per side	Dimensions Pitch length	h_1	h_2	p	Designation
–	–	mm				–
3M	97	291	2,4	1,20	3,0	**PHG 291-3M-...**
	98	294	2,4	1,20	3,0	**PHG 294-3M-...**
	99	297	2,4	1,20	3,0	**PHG 297-3M-...**
	100	300	2,4	1,20	3,0	**PHG 300-3M-...**
	102	306	2,4	1,20	3,0	**PHG 306-3M-...**
	103	309	2,4	1,20	3,0	**PHG 309-3M-...**
	104	312	2,4	1,20	3,0	**PHG 312-3M-...**
	106	318	2,4	1,20	3,0	**PHG 318-3M-...**
	108	324	2,4	1,20	3,0	**PHG 324-3M-...**
	109	327	2,4	1,20	3,0	**PHG 327-3M-...**
	110	330	2,4	1,20	3,0	**PHG 330-3M-...**
	111	333	2,4	1,20	3,0	**PHG 333-3M-...**
	112	336	2,4	1,20	3,0	**PHG 336-3M-...**
	113	339	2,4	1,20	3,0	**PHG 339-3M-...**
	114	342	2,4	1,20	3,0	**PHG 342-3M-...**
	115	345	2,4	1,20	3,0	**PHG 345-3M-...**
	116	348	2,4	1,20	3,0	**PHG 348-3M-...**
	119	357	2,4	1,20	3,0	**PHG 357-3M-...**
	120	360	2,4	1,20	3,0	**PHG 360-3M-...**
	121	363	2,4	1,20	3,0	**PHG 363-3M-...**
	122	366	2,4	1,20	3,0	**PHG 366-3M-...**
	125	375	2,4	1,20	3,0	**PHG 375-3M-...**
	128	384	2,4	1,20	3,0	**PHG 384-3M-...**
	130	390	2,4	1,20	3,0	**PHG 390-3M-...**
	131	393	2,4	1,20	3,0	**PHG 393-3M-...**
	132	396	2,4	1,20	3,0	**PHG 396-3M-...**
	133	399	2,4	1,20	3,0	**PHG 399-3M-...**
	140	420	2,4	1,20	3,0	**PHG 420-3M-...**
	141	423	2,4	1,20	3,0	**PHG 423-3M-...**
	142	426	2,4	1,20	3,0	**PHG 426-3M-...**
	148	444	2,4	1,20	3,0	**PHG 444-3M-...**
	149	447	2,4	1,20	3,0	**PHG 447-3M-...**
	152	456	2,4	1,20	3,0	**PHG 456-3M-...**
	153	459	2,4	1,20	3,0	**PHG 459-3M-...**
	154	462	2,4	1,20	3,0	**PHG 462-3M-...**
	156	468	2,4	1,20	3,0	**PHG 468-3M-...**
	157	471	2,4	1,20	3,0	**PHG 471-3M-...**
	158	474	2,4	1,20	3,0	**PHG 474-3M-...**
	159	477	2,4	1,20	3,0	**PHG 477-3M-...**
	160	480	2,4	1,20	3,0	**PHG 480-3M-...**
	161	483	2,4	1,20	3,0	**PHG 483-3M-...**
	162	486	2,4	1,20	3,0	**PHG 486-3M-...**
	163	489	2,4	1,20	3,0	**PHG 489-3M-...**
	164	492	2,4	1,20	3,0	**PHG 492-3M-...**
	165	495	2,4	1,20	3,0	**PHG 495-3M-...**
	167	501	2,4	1,20	3,0	**PHG 501-3M-...**
	169	507	2,4	1,20	3,0	**PHG 507-3M-...**
	170	510	2,4	1,20	3,0	**PHG 510-3M-...**
	171	513	2,4	1,20	3,0	**PHG 513-3M-...**
	173	519	2,4	1,20	3,0	**PHG 519-3M-...**
	174	522	2,4	1,20	3,0	**PHG 522-3M-...**
	177	531	2,4	1,20	3,0	**PHG 531-3M-...**
	179	537	2,4	1,20	3,0	**PHG 537-3M-...**
	180	540	2,4	1,20	3,0	**PHG 540-3M-...**
	186	558	2,4	1,20	3,0	**PHG 558-3M-...**

Non-standard lengths may also be available.
To complete designation add belt width in mm.
Full sleeves are available in various widths. Please contact your SKF Authorized Distributor.

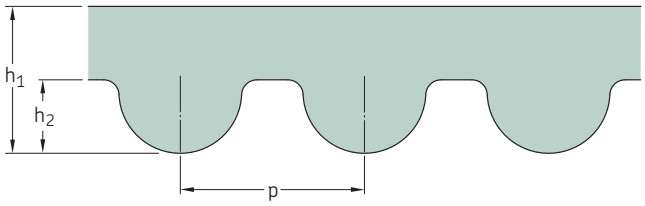

Section	Number of teeth per side	Dimensions Pitch length	h_1	h_2	p	Designation
–	–	mm				–
3M	188	564	2,4	1,20	3,0	**PHG 564-3M-...**
	190	570	2,4	1,20	3,0	**PHG 570-3M-...**
	191	573	2,4	1,20	3,0	**PHG 573-3M-...**
	192	576	2,4	1,20	3,0	**PHG 576-3M-...**
	193	579	2,4	1,20	3,0	**PHG 579-3M-...**
	194	582	2,4	1,20	3,0	**PHG 582-3M-...**
	197	591	2,4	1,20	3,0	**PHG 591-3M-...**
	199	597	2,4	1,20	3,0	**PHG 597-3M-...**
	200	600	2,4	1,20	3,0	**PHG 600-3M-...**
	202	606	2,4	1,20	3,0	**PHG 606-3M-...**
	203	609	2,4	1,20	3,0	**PHG 609-3M-...**
	204	612	2,4	1,20	3,0	**PHG 612-3M-...**
	210	630	2,4	1,20	3,0	**PHG 630-3M-...**
	211	633	2,4	1,20	3,0	**PHG 633-3M-...**
	213	639	2,4	1,20	3,0	**PHG 639-3M-...**
	216	648	2,4	1,20	3,0	**PHG 648-3M-...**
	218	654	2,4	1,20	3,0	**PHG 654-3M-...**
	219	657	2,4	1,20	3,0	**PHG 657-3M-...**
	223	669	2,4	1,20	3,0	**PHG 669-3M-...**
	225	675	2,4	1,20	3,0	**PHG 675-3M-...**
	228	684	2,4	1,20	3,0	**PHG 684-3M-...**
	233	699	2,4	1,20	3,0	**PHG 699-3M-...**
	233	699	2,4	1,20	3,0	**PHG 699-3M-...**
	236	708	2,4	1,20	3,0	**PHG 708-3M-...**
	237	711	2,4	1,20	3,0	**PHG 711-3M-...**
	240	720	2,4	1,20	3,0	**PHG 720-3M-...**
	250	750	2,4	1,20	3,0	**PHG 750-3M-...**
	251	753	2,4	1,20	3,0	**PHG 753-3M-...**
	267	801	2,4	1,20	3,0	**PHG 801-3M-...**
	268	804	2,4	1,20	3,0	**PHG 804-3M-...**
	271	813	2,4	1,20	3,0	**PHG 813-3M-...**
	274	822	2,4	1,20	3,0	**PHG 822-3M-...**
	281	843	2,4	1,20	3,0	**PHG 843-3M-...**
	295	885	2,4	1,20	3,0	**PHG 885-3M-...**
	313	939	2,4	1,20	3,0	**PHG 939-3M-...**
	323	969	2,4	1,20	3,0	**PHG 969-3M-...**
	375	1 125	2,4	1,20	3,0	**PHG 1125-3M-...**
	403	1 209	2,4	1,20	3,0	**PHG 1209-3M-...**
	415	1 245	2,4	1,20	3,0	**PHG 1245-3M-...**
	421	1 263	2,4	1,20	3,0	**PHG 1263-3M-...**
	448	1 344	2,4	1,20	3,0	**PHG 1344-3M-...**
	467	1 401	2,4	1,20	3,0	**PHG 1401-3M-...**
	523	1 569	2,4	1,20	3,0	**PHG 1569-3M-...**
	529	1 587	2,4	1,20	3,0	**PHG 1587-3M-...**
	600	1 800	2,4	1,20	3,0	**PHG 1800-3M-...**
	650	1 950	2,4	1,20	3,0	**PHG 1950-3M-...**
	720	2 160	2,4	1,20	3,0	**PHG 2160-3M-...**
	796	2 388	2,4	1,20	3,0	**PHG 2388-3M-...**
	880	2 640	2,4	1,20	3,0	**PHG 2640-3M-...**
	1 000	3 000	2,4	1,20	3,0	**PHG 3000-3M-...**
	1 070	3 210	2,4	1,20	3,0	**PHG 3210-3M-...**
	1 130	3 390	2,4	1,20	3,0	**PHG 3390-3M-...**
	2 268	6 804	2,4	1,20	3,0	**PHG 6804-3M-...**
5M	36	180	3,6	2,10	5,0	**PHG 180-5M-...**

Section	Number of teeth per side	Dimensions Pitch length	h_1	h_2	p	Designation
–	–	mm				–
5M	40	200	3,6	2,10	5,0	**PHG 200-5M-...**
	42	210	3,6	2,10	5,0	**PHG 210-5M-...**
	43	215	3,6	2,10	5,0	**PHG 215-5M-...**
	45	225	3,6	2,10	5,0	**PHG 225-5M-...**
	46	230	3,6	2,10	5,0	**PHG 230-5M-...**
	47	235	3,6	2,10	5,0	**PHG 235-5M-...**
	49	245	3,6	2,10	5,0	**PHG 245-5M-...**
	50	250	3,6	2,10	5,0	**PHG 250-5M-...**
	51	255	3,6	2,10	5,0	**PHG 255-5M-...**
	52	260	3,6	2,10	5,0	**PHG 260-5M-...**
	53	265	3,6	2,10	5,0	**PHG 265-5M-...**
	54	270	3,6	2,10	5,0	**PHG 270-5M-...**
	56	280	3,6	2,10	5,0	**PHG 280-5M-...**
	57	285	3,6	2,10	5,0	**PHG 285-5M-...**
	59	295	3,6	2,10	5,0	**PHG 295-5M-...**
	60	300	3,6	2,10	5,0	**PHG 300-5M-...**
	61	305	3,6	2,10	5,0	**PHG 305-5M-...**
	62	310	3,6	2,10	5,0	**PHG 310-5M-...**
	64	320	3,6	2,10	5,0	**PHG 320-5M-...**
	65	325	3,6	2,10	5,0	**PHG 325-5M-...**
	66	330	3,6	2,10	5,0	**PHG 330-5M-...**
	68	340	3,6	2,10	5,0	**PHG 340-5M-...**
	69	345	3,6	2,10	5,0	**PHG 345-5M-...**
	70	350	3,6	2,10	5,0	**PHG 350-5M-...**
	72	360	3,6	2,10	5,0	**PHG 360-5M-...**
	73	365	3,6	2,10	5,0	**PHG 365-5M-...**
	74	370	3,6	2,10	5,0	**PHG 370-5M-...**
	75	375	3,6	2,10	5,0	**PHG 375-5M-...**
	76	380	3,6	2,10	5,0	**PHG 380-5M-...**
	77	385	3,6	2,10	5,0	**PHG 385-5M-...**
	78	390	3,6	2,10	5,0	**PHG 390-5M-...**
	79	395	3,6	2,10	5,0	**PHG 395-5M-...**
	80	400	3,6	2,10	5,0	**PHG 400-5M-...**
	80	400	3,6	2,10	5,0	**PHG 405-5M-...**
	82	410	3,6	2,10	5,0	**PHG 410-5M-...**
	84	420	3,6	2,10	5,0	**PHG 420-5M-...**
	85	425	3,6	2,10	5,0	**PHG 425-5M-...**
	86	430	3,6	2,10	5,0	**PHG 430-5M-...**
	87	435	3,6	2,10	5,0	**PHG 435-5M-...**
	88	440	3,6	2,10	5,0	**PHG 440-5M-...**
	89	445	3,6	2,10	5,0	**PHG 445-5M-...**
	90	450	3,6	2,10	5,0	**PHG 450-5M-...**
	92	460	3,6	2,10	5,0	**PHG 460-5M-...**
	93	465	3,6	2,10	5,0	**PHG 465-5M-...**
	94	470	3,6	2,10	5,0	**PHG 470-5M-...**
	95	475	3,6	2,10	5,0	**PHG 475-5M-...**
	96	480	3,6	2,10	5,0	**PHG 480-5M-...**
	98	490	3,6	2,10	5,0	**PHG 490-5M-...**
	100	500	3,6	2,10	5,0	**PHG 500-5M-...**
	101	505	3,6	2,10	5,0	**PHG 505-5M-...**
	102	510	3,6	2,10	5,0	**PHG 510-5M-...**
	104	520	3,6	2,10	5,0	**PHG 520-5M-...**
	105	525	3,6	2,10	5,0	**PHG 525-5M-...**
	106	530	3,6	2,10	5,0	**PHG 530-5M-...**
	107	535	3,6	2,10	5,0	**PHG 535-5M-...**

Non-standard lengths may also be available.
To complete designation add belt width in mm.
Full sleeves are available in various widths. Please contact your SKF Authorized Distributor.

Section	Number of teeth per side	Dimensions Pitch length	h_1	h_2	p	Designation
–	–	mm				–
5M	108	540	3,6	2,10	5,0	**PHG 540-5M-...**
	110	550	3,6	2,10	5,0	**PHG 550-5M-...**
	112	560	3,6	2,10	5,0	**PHG 560-5M-...**
	113	565	3,6	2,10	5,0	**PHG 565-5M-...**
	114	570	3,6	2,10	5,0	**PHG 570-5M-...**
	115	575	3,6	2,10	5,0	**PHG 575-5M-...**
	116	580	3,6	2,10	5,0	**PHG 580-5M-...**
	117	585	3,6	2,10	5,0	**PHG 585-5M-...**
	118	590	3,6	2,10	5,0	**PHG 590-5M-...**
	120	600	3,6	2,10	5,0	**PHG 600-5M-...**
	121	605	3,6	2,10	5,0	**PHG 605-5M-...**
	122	610	3,6	2,10	5,0	**PHG 610-5M-...**
	123	615	3,6	2,10	5,0	**PHG 615-5M-...**
	124	620	3,6	2,10	5,0	**PHG 620-5M-...**
	125	625	3,6	2,10	5,0	**PHG 625-5M-...**
	126	630	3,6	2,10	5,0	**PHG 630-5M-...**
	127	635	3,6	2,10	5,0	**PHG 635-5M-...**
	128	640	3,6	2,10	5,0	**PHG 640-5M-...**
	129	645	3,6	2,10	5,0	**PHG 645-5M-...**
	130	650	3,6	2,10	5,0	**PHG 650-5M-...**
	131	655	3,6	2,10	5,0	**PHG 655-5M-...**
	133	665	3,6	2,10	5,0	**PHG 665-5M-...**
	134	670	3,6	2,10	5,0	**PHG 670-5M-...**
	135	675	3,6	2,10	5,0	**PHG 675-5M-...**
	137	685	3,6	2,10	5,0	**PHG 685-5M-...**
	138	690	3,6	2,10	5,0	**PHG 690-5M-...**
	139	695	3,6	2,10	5,0	**PHG 695-5M-...**
	140	700	3,6	2,10	5,0	**PHG 700-5M-...**
	142	710	3,6	2,10	5,0	**PHG 710-5M-...**
	142	710	3,6	2,10	5,0	**PHG 715-5M-...**
	144	720	3,6	2,10	5,0	**PHG 720-5M-...**
	145	725	3,6	2,10	5,0	**PHG 725-5M-...**
	148	740	3,6	2,10	5,0	**PHG 740-5M-...**
	149	745	3,6	2,10	5,0	**PHG 745-5M-...**
	150	750	3,6	2,10	5,0	**PHG 750-5M-...**
	151	755	3,6	2,10	5,0	**PHG 755-5M-...**
	154	770	3,6	2,10	5,0	**PHG 770-5M-...**
	155	775	3,6	2,10	5,0	**PHG 775-5M-...**
	156	780	3,6	2,10	5,0	**PHG 780-5M-...**
	158	790	3,6	2,10	5,0	**PHG 790-5M-...**
	160	800	3,6	2,10	5,0	**PHG 800-5M-...**
	162	810	3,6	2,10	5,0	**PHG 810-5M-...**
	165	825	3,6	2,10	5,0	**PHG 825-5M-...**
	166	830	3,6	2,10	5,0	**PHG 830-5M-...**
	167	835	3,6	2,10	5,0	**PHG 835-5M-...**
	170	850	3,6	2,10	5,0	**PHG 850-5M-...**
	172	860	3,6	2,10	5,0	**PHG 860-5M-...**
	174	870	3,6	2,10	5,0	**PHG 870-5M-...**
	178	890	3,6	2,10	5,0	**PHG 890-5M-...**
	180	900	3,6	2,10	5,0	**PHG 900-5M-...**
	182	910	3,6	2,10	5,0	**PHG 910-5M-...**
	184	920	3,6	2,10	5,0	**PHG 920-5M-...**
	185	925	3,6	2,10	5,0	**PHG 925-5M-...**
	187	935	3,6	2,10	5,0	**PHG 935-5M-...**
	188	940	3,6	2,10	5,0	**PHG 940-5M-...**
	190	950	3,6	2,10	5,0	**PHG 950-5M-...**
	192	960	3,6	2,10	5,0	**PHG 960-5M-...**
	193	965	3,6	2,10	5,0	**PHG 965-5M-...**
	195	975	3,6	2,10	5,0	**PHG 975-5M-...**
	196	980	3,6	2,10	5,0	**PHG 980-5M-...**
	200	1 000	3,6	2,10	5,0	**PHG 1000-5M-...**
	205	1 025	3,6	2,10	5,0	**PHG 1025-5M-...**
	207	1 035	3,6	2,10	5,0	**PHG 1035-5M-...**
	210	1 050	3,6	2,10	5,0	**PHG 1050-5M-...**
	220	1 100	3,6	2,10	5,0	**PHG 1100-5M-...**
	223	1 115	3,6	2,10	5,0	**PHG 1115-5M-...**
	225	1 125	3,6	2,10	5,0	**PHG 1125-5M-...**
	227	1 135	3,6	2,10	5,0	**PHG 1135-5M-...**
	229	1 145	3,6	2,10	5,0	**PHG 1145-5M-...**
	235	1 175	3,6	2,10	5,0	**PHG 1175-5M-...**
	236	1 180	3,6	2,10	5,0	**PHG 1180-5M-...**
	239	1 195	3,6	2,10	5,0	**PHG 1195-5M-...**
	240	1 200	3,6	2,10	5,0	**PHG 1200-5M-...**
	242	1 210	3,6	2,10	5,0	**PHG 1210-5M-...**
	245	1 225	3,6	2,10	5,0	**PHG 1225-5M-...**
	250	1 250	3,6	2,10	5,0	**PHG 1250-5M-...**

Section	Number of teeth per side	Dimensions Pitch length	h_1	h_2	p	Designation
–	–	mm				–
5M	254	1 270	3,6	2,10	5,0	**PHG 1270-5M-...**
	258	1 290	3,6	2,10	5,0	**PHG 1290-5M-...**
	259	1 295	3,6	2,10	5,0	**PHG 1295-5M-...**
	260	1 300	3,6	2,10	5,0	**PHG 1300-5M-...**
	268	1 340	3,6	2,10	5,0	**PHG 1340-5M-...**
	270	1 350	3,6	2,10	5,0	**PHG 1350-5M-...**
	275	1 375	3,6	2,10	5,0	**PHG 1375-5M-...**
	280	1 400	3,6	2,10	5,0	**PHG 1400-5M-...**
	282	1 410	3,6	2,10	5,0	**PHG 1410-5M-...**
	284	1 420	3,6	2,10	5,0	**PHG 1420-5M-...**
	290	1 450	3,6	2,10	5,0	**PHG 1450-5M-...**
	291	1 455	3,6	2,10	5,0	**PHG 1455-5M-...**
	300	1 500	3,6	2,10	5,0	**PHG 1500-5M-...**
	319	1 595	3,6	2,10	5,0	**PHG 1595-5M-...**
	320	1 600	3,6	2,10	5,0	**PHG 1600-5M-...**
	337	1 685	3,6	2,10	5,0	**PHG 1685-5M-...**
	338	1 690	3,6	2,10	5,0	**PHG 1690-5M-...**
	340	1 700	3,6	2,10	5,0	**PHG 1700-5M-...**
	346	1 730	3,6	2,10	5,0	**PHG 1730-5M-...**
	354	1 770	3,6	2,10	5,0	**PHG 1770-5M-...**
	358	1 790	3,6	2,10	5,0	**PHG 1790-5M-...**
	360	1 800	3,6	2,10	5,0	**PHG 1800-5M-...**
	374	1 870	3,6	2,10	5,0	**PHG 1870-5M-...**
	379	1 895	3,6	2,10	5,0	**PHG 1895-5M-...**
	389	1 945	3,6	2,10	5,0	**PHG 1945-5M-...**
	400	2 000	3,6	2,10	5,0	**PHG 2000-5M-...**
	410	2 050	3,6	2,10	5,0	**PHG 2050-5M-...**
	420	2 100	3,6	2,10	5,0	**PHG 2100-5M-...**
	432	2 160	3,6	2,10	5,0	**PHG 2160-5M-...**
	450	2 250	3,6	2,10	5,0	**PHG 2250-5M-...**
	470	2 350	3,6	2,10	5,0	**PHG 2350-5M-...**
	474	2 370	3,6	2,10	5,0	**PHG 2370-5M-...**
	492	2 460	3,6	2,10	5,0	**PHG 2460-5M-...**
	505	2 525	3,6	2,10	5,0	**PHG 2525-5M-...**
	527	2 635	3,6	2,10	5,0	**PHG 2635-5M-...**
	605	3 025	3,6	2,10	5,0	**PHG 3025-5M-...**
	612	3 060	3,6	2,10	5,0	**PHG 3060-5M-...**
	651	3 255	3,6	2,10	5,0	**PHG 3255-5M-...**
	686	3 430	3,6	2,10	5,0	**PHG 3430-5M-...**
	732	3 660	3,6	2,10	5,0	**PHG 3660-5M-...**
	750	3 750	3,6	2,10	5,0	**PHG 3750-5M-...**
	754	3 770	3,6	2,10	5,0	**PHG 3770-5M-...**
	760	3 800	3,6	2,10	5,0	**PHG 3800-5M-...**
	852	4 260	3,6	2,10	5,0	**PHG 4260-5M-...**
	1 060	5 300	3,6	2,10	5,0	**PHG 5300-5M-...**
	1 400	7 000	3,6	2,10	5,0	**PHG 7000-5M-...**
8M	23	184	5,6	3,88	8,0	**PHG 184-8M-...**
	36	288	5,6	3,88	8,0	**PHG 288-8M-...**
	40	320	5,6	3,88	8,0	**PHG 320-8M-...**
	41	328	5,6	3,88	8,0	**PHG 328-8M-...**
	42	336	5,6	3,88	8,0	**PHG 336-8M-...**
	46	368	5,6	3,88	8,0	**PHG 368-8M-...**
	47	376	5,6	3,88	8,0	**PHG 376-8M-...**
	48	384	5,6	3,88	8,0	**PHG 384-8M-...**
	50	400	5,6	3,88	8,0	**PHG 400-8M-...**
	51	408	5,6	3,88	8,0	**PHG 408-8M-...**
	52	416	5,6	3,88	8,0	**PHG 416-8M-...**
	53	424	5,6	3,88	8,0	**PHG 424-8M-...**
	55	440	5,6	3,88	8,0	**PHG 440-8M-...**
	56	448	5,6	3,88	8,0	**PHG 448-8M-...**
	59	472	5,6	3,88	8,0	**PHG 472-8M-...**
	60	480	5,6	3,88	8,0	**PHG 480-8M-...**
	64	512	5,6	3,88	8,0	**PHG 512-8M-...**
	65	520	5,6	3,88	8,0	**PHG 520-8M-...**
	67	536	5,6	3,88	8,0	**PHG 536-8M-...**
	68	544	5,6	3,88	8,0	**PHG 544-8M-...**
	70	560	5,6	3,88	8,0	**PHG 560-8M-...**
	71	568	5,6	3,88	8,0	**PHG 568-8M-...**
	72	576	5,6	3,88	8,0	**PHG 576-8M-...**
	73	584	5,6	3,88	8,0	**PHG 584-8M-...**
	74	592	5,6	3,88	8,0	**PHG 592-8M-...**
	75	600	5,6	3,88	8,0	**PHG 600-8M-...**
	76	608	5,6	3,88	8,0	**PHG 608-8M-...**
	78	624	5,6	3,88	8,0	**PHG 624-8M-...**
	79	632	5,6	3,88	8,0	**PHG 632-8M-...**
	80	640	5,6	3,88	8,0	**PHG 640-8M-...**

Non-standard lengths may also be available.
To complete designation add belt width in mm.
Full sleeves are available in various widths. Please contact your SKF Authorized Distributor.

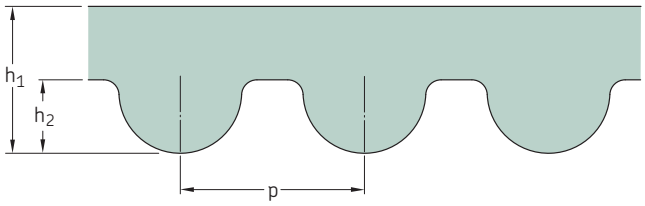

Section	Number of teeth per side	Dimensions Pitch length	h_1	h_2	p	Designation
–	–	mm				–
8M	81	648	5,6	3,88	8,0	**PHG 648-8M-...**
	82	656	5,6	3,88	8,0	**PHG 656-8M-...**
	85	680	5,6	3,88	8,0	**PHG 680-8M-...**
	86	688	5,6	3,88	8,0	**PHG 688-8M-...**
	87	696	5,6	3,88	8,0	**PHG 696-8M-...**
	89	712	5,6	3,88	8,0	**PHG 712-8M-...**
	90	720	5,6	3,88	8,0	**PHG 720-8M-...**
	91	728	5,6	3,88	8,0	**PHG 728-8M-...**
	92	736	5,6	3,88	8,0	**PHG 736-8M-...**
	95	760	5,6	3,88	8,0	**PHG 760-8M-...**
	97	776	5,6	3,88	8,0	**PHG 776-8M-...**
	98	784	5,6	3,88	8,0	**PHG 784-8M-...**
	99	792	5,6	3,88	8,0	**PHG 792-8M-...**
	100	800	5,6	3,88	8,0	**PHG 800-8M-...**
	102	816	5,6	3,88	8,0	**PHG 816-8M-...**
	103	824	5,6	3,88	8,0	**PHG 824-8M-...**
	105	840	5,6	3,88	8,0	**PHG 840-8M-...**
	106	848	5,6	3,88	8,0	**PHG 848-8M-...**
	107	856	5,6	3,88	8,0	**PHG 856-8M-...**
	108	864	5,6	3,88	8,0	**PHG 864-8M-...**
	109	872	5,6	3,88	8,0	**PHG 872-8M-...**
	110	880	5,6	3,88	8,0	**PHG 880-8M-...**
	112	896	5,6	3,88	8,0	**PHG 896-8M-...**
	114	912	5,6	3,88	8,0	**PHG 912-8M-...**
	115	920	5,6	3,88	8,0	**PHG 920-8M-...**
	116	928	5,6	3,88	8,0	**PHG 928-8M-...**
	117	936	5,6	3,88	8,0	**PHG 936-8M-...**
	118	944	5,6	3,88	8,0	**PHG 944-8M-...**
	119	952	5,6	3,88	8,0	**PHG 952-8M-...**
	120	960	5,6	3,88	8,0	**PHG 960-8M-...**
	121	968	5,6	3,88	8,0	**PHG 968-8M-...**
	122	976	5,6	3,88	8,0	**PHG 976-8M-...**
	125	1 000	5,6	3,88	8,0	**PHG 1000-8M-...**
	127	1 016	5,6	3,88	8,0	**PHG 1016-8M-...**
	128	1 024	5,6	3,88	8,0	**PHG 1024-8M-...**
	130	1 040	5,6	3,88	8,0	**PHG 1040-8M-...**
	132	1 056	5,6	3,88	8,0	**PHG 1056-8M-...**
	133	1 064	5,6	3,88	8,0	**PHG 1064-8M-...**
	135	1 080	5,6	3,88	8,0	**PHG 1080-8M-...**
	138	1 104	5,6	3,88	8,0	**PHG 1104-8M-...**
	139	1 112	5,6	3,88	8,0	**PHG 1112-8M-...**
	140	1 120	5,6	3,88	8,0	**PHG 1120-8M-...**
	141	1 128	5,6	3,88	8,0	**PHG 1128-8M-...**
	142	1 136	5,6	3,88	8,0	**PHG 1136-8M-...**
	144	1 152	5,6	3,88	8,0	**PHG 1152-8M-...**
	145	1 160	5,6	3,88	8,0	**PHG 1160-8M-...**
	146	1 168	5,6	3,88	8,0	**PHG 1168-8M-...**
	148	1 184	5,6	3,88	8,0	**PHG 1184-8M-...**
	149	1 192	5,6	3,88	8,0	**PHG 1192-8M-...**
	150	1 200	5,6	3,88	8,0	**PHG 1200-8M-...**
	151	1 208	5,6	3,88	8,0	**PHG 1208-8M-...**
	152	1 216	5,6	3,88	8,0	**PHG 1216-8M-...**
	153	1 224	5,6	3,88	8,0	**PHG 1224-8M-...**
	155	1 240	5,6	3,88	8,0	**PHG 1240-8M-...**
	156	1 248	5,6	3,88	8,0	**PHG 1248-8M-...**

Section	Number of teeth per side	Dimensions Pitch length	h_1	h_2	p	Designation
–	–	mm				–
8M	157	1 256	5,6	3,88	8,0	**PHG 1256-8M-...**
	158	1 264	5,6	3,88	8,0	**PHG 1264-8M-...**
	159	1 272	5,6	3,88	8,0	**PHG 1272-8M-...**
	160	1 280	5,6	3,88	8,0	**PHG 1280-8M-...**
	163	1 304	5,6	3,88	8,0	**PHG 1304-8M-...**
	164	1 312	5,6	3,88	8,0	**PHG 1312-8M-...**
	165	1 320	5,6	3,88	8,0	**PHG 1320-8M-...**
	166	1 328	5,6	3,88	8,0	**PHG 1328-8M-...**
	168	1 344	5,6	3,88	8,0	**PHG 1344-8M-...**
	169	1 352	5,6	3,88	8,0	**PHG 1352-8M-...**
	170	1 360	5,6	3,88	8,0	**PHG 1360-8M-...**
	172	1 376	5,6	3,88	8,0	**PHG 1376-8M-...**
	174	1 392	5,6	3,88	8,0	**PHG 1392-8M-...**
	175	1 400	5,6	3,88	8,0	**PHG 1400-8M-...**
	177	1 416	5,6	3,88	8,0	**PHG 1416-8M-...**
	178	1 424	5,6	3,88	8,0	**PHG 1424-8M-...**
	179	1 432	5,6	3,88	8,0	**PHG 1432-8M-...**
	180	1 440	5,6	3,88	8,0	**PHG 1440-8M-...**
	182	1 456	5,6	3,88	8,0	**PHG 1456-8M-...**
	183	1 464	5,6	3,88	8,0	**PHG 1464-8M-...**
	185	1 480	5,6	3,88	8,0	**PHG 1480-8M-...**
	189	1 512	5,6	3,88	8,0	**PHG 1512-8M-...**
	190	1 520	5,6	3,88	8,0	**PHG 1520-8M-...**
	192	1 536	5,6	3,88	8,0	**PHG 1536-8M-...**
	194	1 552	5,6	3,88	8,0	**PHG 1552-8M-...**
	195	1 560	5,6	3,88	8,0	**PHG 1560-8M-...**
	197	1 576	5,6	3,88	8,0	**PHG 1576-8M-...**
	200	1 600	5,6	3,88	8,0	**PHG 1600-8M-...**
	205	1 640	5,6	3,88	8,0	**PHG 1640-8M-...**
	206	1 648	5,6	3,88	8,0	**PHG 1648-8M-...**
	210	1 680	5,6	3,88	8,0	**PHG 1680-8M-...**
	212	1 696	5,6	3,88	8,0	**PHG 1696-8M-...**
	216	1 728	5,6	3,88	8,0	**PHG 1728-8M-...**
	220	1 760	5,6	3,88	8,0	**PHG 1760-8M-...**
	223	1 784	5,6	3,88	8,0	**PHG 1784-8M-...**
	224	1 792	5,6	3,88	8,0	**PHG 1792-8M-...**
	225	1 800	5,6	3,88	8,0	**PHG 1800-8M-...**
	232	1 856	5,6	3,88	8,0	**PHG 1856-8M-...**
	237	1 896	5,6	3,88	8,0	**PHG 1896-8M-...**
	238	1 904	5,6	3,88	8,0	**PHG 1904-8M-...**
	240	1 920	5,6	3,88	8,0	**PHG 1920-8M-...**
	242	1 936	5,6	3,88	8,0	**PHG 1936-8M-...**
	244	1 952	5,6	3,88	8,0	**PHG 1952-8M-...**
	250	2 000	5,6	3,88	8,0	**PHG 2000-8M-...**
	260	2 080	5,6	3,88	8,0	**PHG 2080-8M-...**
	262	2 096	5,6	3,88	8,0	**PHG 2096-8M-...**
	263	2 104	5,6	3,88	8,0	**PHG 2104-8M-...**
	267	2 136	5,6	3,88	8,0	**PHG 2136-8M-...**
	270	2 160	5,6	3,88	8,0	**PHG 2160-8M-...**
	276	2 208	5,6	3,88	8,0	**PHG 2208-8M-...**
	280	2 240	5,6	3,88	8,0	**PHG 2240-8M-...**
	281	2 248	5,6	3,88	8,0	**PHG 2248-8M-...**
	288	2 304	5,6	3,88	8,0	**PHG 2304-8M-...**
	291	2 328	5,6	3,88	8,0	**PHG 2328-8M-...**
	299	2 392	5,6	3,88	8,0	**PHG 2392-8M-...**

Non-standard lengths may also be available.
To complete designation add belt width in mm.
Full sleeves are available in various widths. Please contact your SKF Authorized Distributor.

Section	Number of teeth per side	Dimensions Pitch length	h_1	h_2	p	Designation
–	–	mm				–
8M	300	2 400	5,6	3,88	8,0	**PHG 2400-8M-...**
	313	2 504	5,6	3,88	8,0	**PHG 2504-8M-...**
	323	2 584	5,6	3,88	8,0	**PHG 2584-8M-...**
	325	2 600	5,6	3,88	8,0	**PHG 2600-8M-...**
	332	2 656	5,6	3,88	8,0	**PHG 2656-8M-...**
	342	2 736	5,6	3,88	8,0	**PHG 2736-8M-...**
	350	2 800	5,6	3,88	8,0	**PHG 2800-8M-...**
	381	3 048	5,6	3,88	8,0	**PHG 3048-8M-...**
	390	3 120	5,6	3,88	8,0	**PHG 3120-8M-...**
	396	3 168	5,6	3,88	8,0	**PHG 3168-8M-...**
	400	3 200	5,6	3,88	8,0	**PHG 3200-8M-...**
	410	3 280	5,6	3,88	8,0	**PHG 3280-8M-...**
	425	3 400	5,6	3,88	8,0	**PHG 3400-8M-...**
	450	3 600	5,6	3,88	8,0	**PHG 3600-8M-...**
	465	3 720	5,6	3,88	8,0	**PHG 3720-8M-...**
	478	3 824	5,6	3,88	8,0	**PHG 3824-8M-...**
	483	3 864	5,6	3,88	8,0	**PHG 3864-8M-...**
	500	4 000	5,6	3,88	8,0	**PHG 4000-8M-...**
	525	4 200	5,6	3,88	8,0	**PHG 4200-8M-...**
	550	4 400	5,6	3,88	8,0	**PHG 4400-8M-...**
	640	5 120	5,6	3,88	8,0	**PHG 5120-8M-...**
	700	5 600	5,6	3,88	8,0	**PHG 5600-8M-...**
	745	5 960	5,6	3,88	8,0	**PHG 5960-8M-...**
	825	6 600	5,6	3,88	8,0	**PHG 6600-8M-...**
	860	6 880	5,6	3,88	8,0	**PHG 6880-8M-...**
14M	67	938	10,0	6,10	14,0	**PHG 938-14M-...**
	69	966	10,0	6,10	14,0	**PHG 966-14M-...**
	74	1 036	10,0	6,10	14,0	**PHG 1036-14M-...**
	75	1 050	10,0	6,10	14,0	**PHG 1050-14M-...**
	76	1 064	10,0	6,10	14,0	**PHG 1064-14M-...**
	78	1 092	10,0	6,10	14,0	**PHG 1092-14M-...**
	80	1 120	10,0	6,10	14,0	**PHG 1120-14M-...**
	82	1 148	10,0	6,10	14,0	**PHG 1148-14M-...**
	85	1 190	10,0	6,10	14,0	**PHG 1190-14M-...**
	89	1 246	10,0	6,10	14,0	**PHG 1246-14M-...**
	90	1 260	10,0	6,10	14,0	**PHG 1260-14M-...**
	92	1 288	10,0	6,10	14,0	**PHG 1288-14M-...**
	94	1 316	10,0	6,10	14,0	**PHG 1316-14M-...**
	96	1 344	10,0	6,10	14,0	**PHG 1344-14M-...**
	100	1 400	10,0	6,10	14,0	**PHG 1400-14M-...**
	101	1 414	10,0	6,10	14,0	**PHG 1414-14M-...**
	103	1 442	10,0	6,10	14,0	**PHG 1442-14M-...**
	104	1 456	10,0	6,10	14,0	**PHG 1456-14M-...**
	105	1 470	10,0	6,10	14,0	**PHG 1470-14M-...**
	106	1 484	10,0	6,10	14,0	**PHG 1484-14M-...**
	108	1 512	10,0	6,10	14,0	**PHG 1512-14M-...**
	110	1 540	10,0	6,10	14,0	**PHG 1540-14M-...**
	112	1 568	10,0	6,10	14,0	**PHG 1568-14M-...**
	115	1 610	10,0	6,10	14,0	**PHG 1610-14M-...**
	118	1 652	10,0	6,10	14,0	**PHG 1652-14M-...**
	125	1 750	10,0	6,10	14,0	**PHG 1750-14M-...**
	126	1 764	10,0	6,10	14,0	**PHG 1764-14M-...**
	127	1 778	10,0	6,10	14,0	**PHG 1778-14M-...**
	128	1 792	10,0	6,10	14,0	**PHG 1792-14M-...**
	128	1 792	10,0	6,10	14,0	**PHG 1792-14M-...**
	129	1 806	10,0	6,10	14,0	**PHG 1806-14M-...**
	130	1 820	10,0	6,10	14,0	**PHG 1820-14M-...**
	135	1 890	10,0	6,10	14,0	**PHG 1890-14M-...**
	138	1 932	10,0	6,10	14,0	**PHG 1932-14M-...**
	139	1 946	10,0	6,10	14,0	**PHG 1946-14M-...**
	140	1 960	10,0	6,10	14,0	**PHG 1960-14M-...**
	143	2 002	10,0	6,10	14,0	**PHG 2002-14M-...**
	150	2 100	10,0	6,10	14,0	**PHG 2100-14M-...**
	160	2 240	10,0	6,10	14,0	**PHG 2240-14M-...**
	165	2 310	10,0	6,10	14,0	**PHG 2310-14M-...**
	175	2 450	10,0	6,10	14,0	**PHG 2450-14M-...**
	175	2 450	10,0	6,10	14,0	**PHG 2450-14M-...**
	185	2 590	10,0	6,10	14,0	**PHG 2590-14M-...**
	190	2 660	10,0	6,10	14,0	**PHG 2660-14M-...**
	200	2 800	10,0	6,10	14,0	**PHG 2800-14M-...**
	222	3 108	10,0	6,10	14,0	**PHG 3108-14M-...**
	225	3 150	10,0	6,10	14,0	**PHG 3150-14M-...**
	236	3 304	10,0	6,10	14,0	**PHG 3304-14M-...**
	240	3 360	10,0	6,10	14,0	**PHG 3360-14M-...**
	250	3 500	10,0	6,10	14,0	**PHG 3500-14M-...**
	262	3 668	10,0	6,10	14,0	**PHG 3668-14M-...**

Section	Number of teeth per side	Dimensions Pitch length	h_1	h_2	p	Designation
–	–	mm				–
14M	275	3 850	10,0	6,10	14,0	**PHG 3850-14M-...**
	309	4 326	10,0	6,10	14,0	**PHG 4326-14M-...**
	324	4 536	10,0	6,10	14,0	**PHG 4536-14M-...**
	327	4 578	10,0	6,10	14,0	**PHG 4578-14M-...**
	340	4 760	10,0	6,10	14,0	**PHG 4760-14M-...**
	354	4 956	10,0	6,10	14,0	**PHG 4956-14M-...**
	360	5 040	10,0	6,10	14,0	**PHG 5040-14M-...**
	380	5 320	10,0	6,10	14,0	**PHG 5320-14M-...**
	410	5 740	10,0	6,10	14,0	**PHG 5740-14M-...**
	424	5 936	10,0	6,10	14,0	**PHG 5936-14M-...**
	440	6 160	10,0	6,10	14,0	**PHG 6160-14M-...**
	490	6 860	10,0	6,10	14,0	**PHG 6860-14M-...**

Non-standard lengths may also be available.
To complete designation add belt width in mm.
Full sleeves are available in various widths. Please contact your SKF Authorized Distributor.

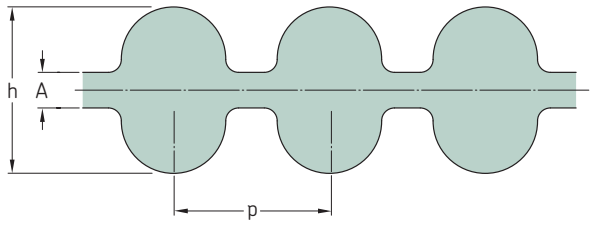

Section	Number of teeth per side	Dimensions Pitch length	h	A	p	Designation
–	–	mm				–
D-5M	100	500	5,3	1,1	5,0	**PHG DA-500-5M-...**
	101	505	5,3	1,1	5,0	**PHG DA-505-5M-...**
	104	520	5,3	1,1	5,0	**PHG DA-520-5M-...**
	105	525	5,3	1,1	5,0	**PHG DA-525-5M-...**
	106	530	5,3	1,1	5,0	**PHG DA-530-5M-...**
	107	535	5,3	1,1	5,0	**PHG DA-535-5M-...**
	108	540	5,3	1,1	5,0	**PHG DA-540-5M-...**
	110	550	5,3	1,1	5,0	**PHG DA-550-5M-...**
	112	560	5,3	1,1	5,0	**PHG DA-560-5M-...**
	113	565	5,3	1,1	5,0	**PHG DA-565-5M-...**
	114	570	5,3	1,1	5,0	**PHG DA-570-5M-...**
	115	575	5,3	1,1	5,0	**PHG DA-575-5M-...**
	116	580	5,3	1,1	5,0	**PHG DA-580-5M-...**
	117	585	5,3	1,1	5,0	**PHG DA-585-5M-...**
	118	590	5,3	1,1	5,0	**PHG DA-590-5M-...**
	120	600	5,3	1,1	5,0	**PHG DA-600-5M-...**
	121	605	5,3	1,1	5,0	**PHG DA-605-5M-...**
	122	610	5,3	1,1	5,0	**PHG DA-610-5M-...**
	123	615	5,3	1,1	5,0	**PHG DA-615-5M-...**
	124	620	5,3	1,1	5,0	**PHG DA-620-5M-...**
	125	625	5,3	1,1	5,0	**PHG DA-625-5M-...**
	126	630	5,3	1,1	5,0	**PHG DA-630-5M-...**
	127	635	5,3	1,1	5,0	**PHG DA-635-5M-...**
	128	640	5,3	1,1	5,0	**PHG DA-640-5M-...**
	129	645	5,3	1,1	5,0	**PHG DA-645-5M-...**
	130	650	5,3	1,1	5,0	**PHG DA-650-5M-...**
	131	655	5,3	1,1	5,0	**PHG DA-655-5M-...**
	134	670	5,3	1,1	5,0	**PHG DA-670-5M-...**
	135	675	5,3	1,1	5,0	**PHG DA-675-5M-...**
	137	685	5,3	1,1	5,0	**PHG DA-685-5M-...**
	138	690	5,3	1,1	5,0	**PHG DA-690-5M-...**
	139	695	5,3	1,1	5,0	**PHG DA-695-5M-...**
	140	700	5,3	1,1	5,0	**PHG DA-700-5M-...**
	142	710	5,3	1,1	5,0	**PHG DA-715-5M-...**
	142	710	5,3	1,1	5,0	**PHG DA-710-5M-...**
	144	720	5,3	1,1	5,0	**PHG DA-720-5M-...**
	145	725	5,3	1,1	5,0	**PHG DA-725-5M-...**
	148	740	5,3	1,1	5,0	**PHG DA-740-5M-...**
	149	745	5,3	1,1	5,0	**PHG DA-745-5M-...**
	150	750	5,3	1,1	5,0	**PHG DA-750-5M-...**
	151	755	5,3	1,1	5,0	**PHG DA-755-5M-...**
	154	770	5,3	1,1	5,0	**PHG DA-770-5M-...**
	155	775	5,3	1,1	5,0	**PHG DA-775-5M-...**
	156	780	5,3	1,1	5,0	**PHG DA-780-5M-...**
	158	790	5,3	1,1	5,0	**PHG DA-790-5M-...**
	160	800	5,3	1,1	5,0	**PHG DA-800-5M-...**
	162	810	5,3	1,1	5,0	**PHG DA-810-5M-...**
	165	825	5,3	1,1	5,0	**PHG DA-825-5M-...**
	166	830	5,3	1,1	5,0	**PHG DA-830-5M-...**
	167	835	5,3	1,1	5,0	**PHG DA-835-5M-...**
	170	850	5,3	1,1	5,0	**PHG DA-850-5M-...**
	172	860	5,3	1,1	5,0	**PHG DA-860-5M-...**
	174	870	5,3	1,1	5,0	**PHG DA-870-5M-...**
	178	890	5,3	1,1	5,0	**PHG DA-890-5M-...**
	180	900	5,3	1,1	5,0	**PHG DA-900-5M-...**
D-5M	182	910	5,3	1,1	5,0	**PHG DA-910-5M-...**
	184	920	5,3	1,1	5,0	**PHG DA-920-5M-...**
	185	925	5,3	1,1	5,0	**PHG DA-925-5M-...**
	187	935	5,3	1,1	5,0	**PHG DA-935-5M-...**
	188	940	5,3	1,1	5,0	**PHG DA-940-5M-...**
	190	950	5,3	1,1	5,0	**PHG DA-950-5M-...**
	192	960	5,3	1,1	5,0	**PHG DA-960-5M-...**
	193	965	5,3	1,1	5,0	**PHG DA-965-5M-...**
	195	975	5,3	1,1	5,0	**PHG DA-975-5M-...**
	196	980	5,3	1,1	5,0	**PHG DA-980-5M-...**
	200	1 000	5,3	1,1	5,0	**PHG DA-1000-5M-...**
	205	1 025	5,3	1,1	5,0	**PHG DA-1025-5M-...**
	207	1 035	5,3	1,1	5,0	**PHG DA-1035-5M-...**
	210	1 050	5,3	1,1	5,0	**PHG DA-1050-5M-...**
	220	1 100	5,3	1,1	5,0	**PHG DA-1100-5M-...**
	223	1 115	5,3	1,1	5,0	**PHG DA-1115-5M-...**
	225	1 125	5,3	1,1	5,0	**PHG DA-1125-5M-...**
	227	1 135	5,3	1,1	5,0	**PHG DA-1135-5M-...**
	229	1 145	5,3	1,1	5,0	**PHG DA-1145-5M-...**
	235	1 175	5,3	1,1	5,0	**PHG DA-1175-5M-...**
	236	1 180	5,3	1,1	5,0	**PHG DA-1180-5M-...**
	239	1 195	5,3	1,1	5,0	**PHG DA-1195-5M-...**
	240	1 200	5,3	1,1	5,0	**PHG DA-1200-5M-...**
	242	1 210	5,3	1,1	5,0	**PHG DA-1210-5M-...**
	245	1 225	5,3	1,1	5,0	**PHG DA-1225-5M-...**
	250	1 250	5,3	1,1	5,0	**PHG DA-1250-5M-...**
	254	1 270	5,3	1,1	5,0	**PHG DA-1270-5M-...**
	258	1 290	5,3	1,1	5,0	**PHG DA-1290-5M-...**
	259	1 295	5,3	1,1	5,0	**PHG DA-1295-5M-...**
	260	1 300	5,3	1,1	5,0	**PHG DA-1300-5M-...**
	268	1 340	5,3	1,1	5,0	**PHG DA-1340-5M-...**
	270	1 350	5,3	1,1	5,0	**PHG DA-1350-5M-...**
	275	1 375	5,3	1,1	5,0	**PHG DA-1375-5M-...**
	280	1 400	5,3	1,1	5,0	**PHG DA-1400-5M-...**
	282	1 410	5,3	1,1	5,0	**PHG DA-1410-5M-...**
	284	1 420	5,3	1,1	5,0	**PHG DA-1420-5M-...**
	290	1 450	5,3	1,1	5,0	**PHG DA-1450-5M-...**
	291	1 455	5,3	1,1	5,0	**PHG DA-1455-5M-...**
	300	1 500	5,3	1,1	5,0	**PHG DA-1500-5M-...**
	319	1 595	5,3	1,1	5,0	**PHG DA-1595-5M-...**
	320	1 600	5,3	1,1	5,0	**PHG DA-1600-5M-...**
	337	1 685	5,3	1,1	5,0	**PHG DA-1685-5M-...**
	338	1 690	5,3	1,1	5,0	**PHG DA-1690-5M-...**
D-8M	64	512	8,2	1,4	8,0	**PHG DA-512-8M-...**
	65	520	8,2	1,4	8,0	**PHG DA-520-8M-...**
	67	536	8,2	1,4	8,0	**PHG DA-536-8M-...**
	68	544	8,2	1,4	8,0	**PHG DA-544-8M-...**
	70	560	8,2	1,4	8,0	**PHG DA-560-8M-...**
	71	568	8,2	1,4	8,0	**PHG DA-568-8M-...**
	72	576	8,2	1,4	8,0	**PHG DA-576-8M-...**
	73	584	8,2	1,4	8,0	**PHG DA-584-8M-...**
	74	592	8,2	1,4	8,0	**PHG DA-592-8M-...**
	75	600	8,2	1,4	8,0	**PHG DA-600-8M-...**
	76	608	8,2	1,4	8,0	**PHG DA-608-8M**

Non-standard lengths may also be available.
To complete designation add belt width in mm.
Double-sided HiTD belts are available in symmetric (DA) only.
Full sleeves are available in various widths. Please contact your SKF Authorized Distributor.

Section	Number of teeth per side	Dimensions Pitch length	h	A	p	Designation
–	–	mm				–
D-8M	78	624	8,2	1,4	8,0	**PHG DA-624-8M-...**
	79	632	8,2	1,4	8,0	**PHG DA-632-8M-...**
	80	640	8,2	1,4	8,0	**PHG DA-640-8M-...**
	81	648	8,2	1,4	8,0	**PHG DA-648-8M-...**
	82	656	8,2	1,4	8,0	**PHG DA-656-8M-...**
	85	680	8,2	1,4	8,0	**PHG DA-680-8M-...**
	86	688	8,2	1,4	8,0	**PHG DA-688-8M-...**
	87	696	8,2	1,4	8,0	**PHG DA-696-8M-...**
	89	712	8,2	1,4	8,0	**PHG DA-712-8M-...**
	90	720	8,2	1,4	8,0	**PHG DA-720-8M-...**
	91	728	8,2	1,4	8,0	**PHG DA-728-8M-...**
	92	736	8,2	1,4	8,0	**PHG DA-736-8M-...**
	95	760	8,2	1,4	8,0	**PHG DA-760-8M-...**
	97	776	8,2	1,4	8,0	**PHG DA-776-8M-...**
	98	784	8,2	1,4	8,0	**PHG DA-784-8M-...**
	99	792	8,2	1,4	8,0	**PHG DA-792-8M-...**
	100	800	8,2	1,4	8,0	**PHG DA-800-8M-...**
	102	816	8,2	1,4	8,0	**PHG DA-816-8M-...**
	103	824	8,2	1,4	8,0	**PHG DA-824-8M-...**
	105	840	8,2	1,4	8,0	**PHG DA-840-8M-...**
	106	848	8,2	1,4	8,0	**PHG DA-848-8M-...**
	107	856	8,2	1,4	8,0	**PHG DA-856-8M-...**
	108	864	8,2	1,4	8,0	**PHG DA-864-8M-...**
	109	872	8,2	1,4	8,0	**PHG DA-872-8M-...**
	110	880	8,2	1,4	8,0	**PHG DA-880-8M-...**
	112	896	8,2	1,4	8,0	**PHG DA-896-8M-...**
	114	912	8,2	1,4	8,0	**PHG DA-912-8M-...**
	115	920	8,2	1,4	8,0	**PHG DA-920-8M-...**
	116	928	8,2	1,4	8,0	**PHG DA-928-8M-...**
	117	936	8,2	1,4	8,0	**PHG DA-936-8M-...**
	118	944	8,2	1,4	8,0	**PHG DA-944-8M-...**
	119	952	8,2	1,4	8,0	**PHG DA-952-8M-...**
	120	960	8,2	1,4	8,0	**PHG DA-960-8M-...**
	121	968	8,2	1,4	8,0	**PHG DA-968-8M-...**
	122	976	8,2	1,4	8,0	**PHG DA-976-8M-...**
	125	1 000	8,2	1,4	8,0	**PHG DA-1000-8M-...**
	127	1 016	8,2	1,4	8,0	**PHG DA-1016-8M-...**
	128	1 024	8,2	1,4	8,0	**PHG DA-1024-8M-...**
	130	1 040	8,2	1,4	8,0	**PHG DA-1040-8M-...**
	132	1 056	8,2	1,4	8,0	**PHG DA-1056-8M-...**
	133	1 064	8,2	1,4	8,0	**PHG DA-1064-8M-...**
	135	1 080	8,2	1,4	8,0	**PHG DA-1080-8M-...**
	136	1 088	8,2	1,4	8,0	**PHG DA-1088-8M-...**
	138	1 104	8,2	1,4	8,0	**PHG DA-1104-8M-...**
	139	1 112	8,2	1,4	8,0	**PHG DA-1112-8M**
	140	1 120	8,2	1,4	8,0	**PHG DA-1120-8M-...**
	141	1 128	8,2	1,4	8,0	**PHG DA-1128-8M-...**
	142	1 136	8,2	1,4	8,0	**PHG DA-1136-8M-...**
	144	1 152	8,2	1,4	8,0	**PHG DA-1152-8M-...**
	145	1 160	8,2	1,4	8,0	**PHG DA-1160-8M-...**
	146	1 168	8,2	1,4	8,0	**PHG DA-1168-8M-...**
	148	1 184	8,2	1,4	8,0	**PHG DA-1184-8M-...**
	149	1 192	8,2	1,4	8,0	**PHG DA-1192-8M**
	150	1 200	8,2	1,4	8,0	**PHG DA-1200-8M-...**
	151	1 208	8,2	1,4	8,0	**PHG DA-1208-8M-...**
	152	1 216	8,2	1,4	8,0	**PHG DA-1216-8M-...**
	153	1 224	8,2	1,4	8,0	**PHG DA-1224-8M-...**
	155	1 240	8,2	1,4	8,0	**PHG DA-1240-8M-...**
	156	1 248	8,2	1,4	8,0	**PHG DA-1248-8M-...**
	157	1 256	8,2	1,4	8,0	**PHG DA-1256-8M-...**
	158	1 264	8,2	1,4	8,0	**PHG DA-1264-8M-...**
	159	1 272	8,2	1,4	8,0	**PHG DA-1272-8M-...**
	160	1 280	8,2	1,4	8,0	**PHG DA-1280-8M-...**
	163	1 304	8,2	1,4	8,0	**PHG DA-1304-8M-...**
	164	1 312	8,2	1,4	8,0	**PHG DA-1312-8M-...**
	165	1 320	8,2	1,4	8,0	**PHG DA-1320-8M-...**
	166	1 328	8,2	1,4	8,0	**PHG DA-1328-8M-...**
	168	1 344	8,2	1,4	8,0	**PHG DA-1344-8M-...**
	169	1 352	8,2	1,4	8,0	**PHG DA-1352-8M-...**
	170	1 360	8,2	1,4	8,0	**PHG DA-1360-8M-...**
	172	1 376	8,2	1,4	8,0	**PHG DA-1376-8M-...**
	174	1 392	8,2	1,4	8,0	**PHG DA-1392-8M-...**
	175	1 400	8,2	1,4	8,0	**PHG DA-1400-8M-...**
	177	1 416	8,2	1,4	8,0	**PHG DA-1416-8M-...**
	178	1 424	8,2	1,4	8,0	**PHG DA-1424-8M-...**
	179	1 432	8,2	1,4	8,0	**PHG DA-1432-8M-...**

Section	Number of teeth per side	Dimensions Pitch length	h	A	p	Designation
–	–	mm				–
D-8M	180	1 440	8,2	1,4	8,0	**PHG DA-1440-8M-...**
	182	1 456	8,2	1,4	8,0	**PHG DA-1456-8M-...**
	183	1 464	8,2	1,4	8,0	**PHG DA-1464-8M-...**
	185	1 480	8,2	1,4	8,0	**PHG DA-1480-8M-...**
	189	1 512	8,2	1,4	8,0	**PHG DA-1512-8M-...**
	190	1 520	8,2	1,4	8,0	**PHG DA-1520-8M-...**
	192	1 536	8,2	1,4	8,0	**PHG DA-1536-8M-...**
	194	1 552	8,2	1,4	8,0	**PHG DA-1552-8M-...**
	195	1 560	8,2	1,4	8,0	**PHG DA-1560-8M-...**
	197	1 576	8,2	1,4	8,0	**PHG DA-1576-8M-...**
	200	1 600	8,2	1,4	8,0	**PHG DA-1600-8M-...**
	205	1 640	8,2	1,4	8,0	**PHG DA-1640-8M-...**
	206	1 648	8,2	1,4	8,0	**PHG DA-1648-8M-...**
	210	1 680	8,2	1,4	8,0	**PHG DA-1680-8M-...**
	212	1 696	8,2	1,4	8,0	**PHG DA-1696-8M-...**
	216	1 728	8,2	1,4	8,0	**PHG DA-1728-8M-...**
	220	1 760	8,2	1,4	8,0	**PHG DA-1760-8M-...**
	223	1 784	8,2	1,4	8,0	**PHG DA-1784-8M-...**
	224	1 792	8,2	1,4	8,0	**PHG DA-1792-8M-...**
	225	1 800	8,2	1,4	8,0	**PHG DA-1800-8M-...**
	232	1 856	8,2	1,4	8,0	**PHG DA-1856-8M-...**
	237	1 896	8,2	1,4	8,0	**PHG DA-1896-8M-...**
	238	1 904	8,2	1,4	8,0	**PHG DA-1904-8M-...**
	240	1 920	8,2	1,4	8,0	**PHG DA-1920-8M-...**
	242	1 936	8,2	1,4	8,0	**PHG DA-1936-8M-...**
	244	1 952	8,2	1,4	8,0	**PHG DA-1952-8M-...**
	250	2 000	8,2	1,4	8,0	**PHG DA-2000-8M-...**
	260	2 080	8,2	1,4	8,0	**PHG DA-2080-8M-...**
	262	2 096	8,2	1,4	8,0	**PHG DA-2096-8M-...**
	263	2 104	8,2	1,4	8,0	**PHG DA-2104-8M-...**
	267	2 136	8,2	1,4	8,0	**PHG DA-2136-8M-...**
	270	2 160	8,2	1,4	8,0	**PHG DA-2160-8M-...**
	276	2 208	8,2	1,4	8,0	**PHG DA-2208-8M-...**
	280	2 240	8,2	1,4	8,0	**PHG DA-2240-8M-...**
	281	2 248	8,2	1,4	8,0	**PHG DA-2248-8M-...**
	284	2 272	8,2	1,4	8,0	**PHG DA-2272-8M-...**
	288	2 304	8,2	1,4	8,0	**PHG DA-2304-8M-...**
	291	2 328	8,2	1,4	8,0	**PHG DA-2328-8M-...**
	299	2 392	8,2	1,4	8,0	**PHG DA-2392-8M-...**
	300	2 400	8,2	1,4	8,0	**PHG DA-2400-8M-...**
	313	2 504	8,2	1,4	8,0	**PHG DA-2504-8M-...**
	323	2 584	8,2	1,4	8,0	**PHG DA-2584-8M-...**
	325	2 600	8,2	1,4	8,0	**PHG DA-2600-8M-...**
	332	2 656	8,2	1,4	8,0	**PHG DA-2656-8M-...**
	342	2 736	8,2	1,4	8,0	**PHG DA-2736-8M-...**
	350	2 800	8,2	1,4	8,0	**PHG DA-2800-8M-...**
	381	3 048	8,2	1,4	8,0	**PHG DA-3048-8M-...**
	390	3 120	8,2	1,4	8,0	**PHG DA-3120-8M-...**
	396	3 168	8,2	1,4	8,0	**PHG DA-3168-8M-...**
	400	3 200	8,2	1,4	8,0	**PHG DA-3200-8M-...**
	410	3 280	8,2	1,4	8,0	**PHG DA-3280-8M-...**
	425	3 400	8,2	1,4	8,0	**PHG DA-3400-8M-...**
	450	3 600	8,2	1,4	8,0	**PHG DA-3600-8M-...**
	465	3 720	8,2	1,4	8,0	**PHG DA-3720-8M-...**
	478	3 824	8,2	1,4	8,0	**PHG DA-3824-8M-...**
	483	3 864	8,2	1,4	8,0	**PHG DA-3864-8M-...**
	500	4 000	8,2	1,4	8,0	**PHG DA-4000-8M-...**
	525	4 200	8,2	1,4	8,0	**PHG DA-4200-8M-...**
	550	4 400	8,2	1,4	8,0	**PHG DA-4400-8M-...**
	640	5 120	8,2	1,4	8,0	**PHG DA-5120-8M-...**
	700	5 600	8,2	1,4	8,0	**PHG DA-5600-8M-...**
	745	5 960	8,2	1,4	8,0	**PHG DA-5960-8M-...**
	825	6 600	8,2	1,4	8,0	**PHG DA-6600-8M-...**
	860	6 880	8,2	1,4	8,0	**PHG DA-6880-8M-...**
D-14M	115	1 610	14,8	2,8	14,0	**PHG DA-1610-14M-...**
	118	1 652	14,8	2,8	14,0	**PHG DA-1652-14M-...**
	125	1 750	14,8	2,8	14,0	**PHG DA-1750-14M-...**
	126	1 764	14,8	2,8	14,0	**PHG DA-1764-14M-...**
	127	1 778	14,8	2,8	14,0	**PHG DA-1778-14M-...**
	128	1 792	14,8	2,8	14,0	**PHG DA-1792-14M-...**
	129	1 806	14,8	2,8	14,0	**PHG DA-1806-14M-...**
	130	1 820	14,8	2,8	14,0	**PHG DA-1820-14M-...**
	135	1 890	14,8	2,8	14,0	**PHG DA-1890-14M-...**
	138	1 932	14,8	2,8	14,0	**PHG DA-1932-14M-...**
	139	1 946	14,8	2,8	14,0	**PHG DA-1946-14M-...**
	140	1 960	14,8	2,8	14,0	**PHG DA-1960-14M-...**

Non-standard lengths may also be available.
To complete designation add belt width in mm.
Double-sided HiTD belts are available in symmetric (DA) only.
Full sleeves are available in various widths. Please contact your SKF Authorized Distributor.

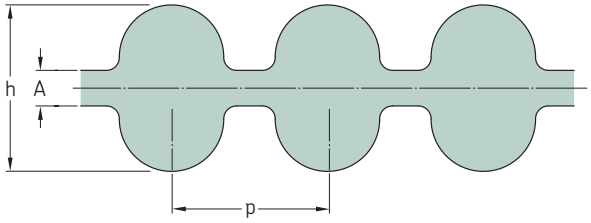

Section	Number of teeth per side	Dimensions Pitch length	h	A	p	Designation
–	–	mm				–
D-14M	143	2 002	14,8	2,8	14,0	**PHG DA-2002-14M-...**
	150	2 100	14,8	2,8	14,0	**PHG DA-2100-14M-...**
	160	2 240	14,8	2,8	14,0	**PHG DA-2240-14M-...**
	165	2 310	14,8	2,8	14,0	**PHG DA-2310-14M-...**
	175	2 450	14,8	2,8	14,0	**PHG DA-2450-14M-...**
	185	2 590	14,8	2,8	14,0	**PHG DA-2590-14M-...**
	190	2 660	14,8	2,8	14,0	**PHG DA-2660-14M-...**
	200	2 800	14,8	2,8	14,0	**PHG DA-2800-14M-...**
	222	3 108	14,8	2,8	14,0	**PHG DA-3108-14M-...**
	225	3 150	14,8	2,8	14,0	**PHG DA-3150-14M-...**
	236	3 304	14,8	2,8	14,0	**PHG DA-3304-14M-...**
	240	3 360	14,8	2,8	14,0	**PHG DA-3360-14M-...**
	250	3 500	14,8	2,8	14,0	**PHG DA-3500-14M-...**
	275	3 850	14,8	2,8	14,0	**PHG DA-3850-14M-...**
	309	4 326	14,8	2,8	14,0	**PHG DA-4326-14M-...**
	324	4 536	14,8	2,8	14,0	**PHG DA-4536-14M-...**
	327	4 578	14,8	2,8	14,0	**PHG DA-4578-14M-...**
	340	4 760	14,8	2,8	14,0	**PHG DA-4760-14M-...**
	354	4 956	14,8	2,8	14,0	**PHG DA-4956-14M-...**
	360	5 040	14,8	2,8	14,0	**PHG DA-5040-14M-...**
	380	5 320	14,8	2,8	14,0	**PHG DA-5320-14M-...**
	410	5 740	14,8	2,8	14,0	**PHG DA-5740-14M-...**
	424	5 936	14,8	2,8	14,0	**PHG DA-5936-14M-...**
	440	6 160	14,8	2,8	14,0	**PHG DA-6160-14M-...**
	490	6 860	14,8	2,8	14,0	**PHG DA-6860-14M-...**

Non-standard lengths may also be available.
To complete designation add belt width in mm.
Double-sided HiTD belts are available in symmetric (DA) only.
Full sleeves are available in various widths. Please contact your SKF Authorized Distributor.

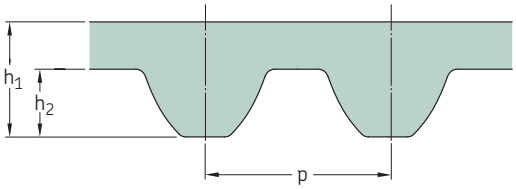

Section	Number of teeth	Dimensions Pitch length		h_1	h_2	p	Designation
–	–	in.	mm				–
S2M	30	2,36	60	1,36	0,76	2	**PHG S2M-60-...**
	40	3,15	80	1,36	0,76	2	**PHG S2M-80-...**
	48	3,78	96	1,36	0,76	2	**PHG S2M-96-...**
	55	4,33	110	1,36	0,76	2	**PHG S2M-110-...**
	60	4,72	120	1,36	0,76	2	**PHG S2M-120-...**
	63	4,96	126	1,36	0,76	2	**PHG S2M-126-...**
	64	5,04	128	1,36	0,76	2	**PHG S2M-128-...**
	65	5,12	130	1,36	0,76	2	**PHG S2M-130-...**
	66	5,20	132	1,36	0,76	2	**PHG S2M-132-...**
	67	5,28	134	1,36	0,76	2	**PHG S2M-134-...**
	69	5,43	138	1,36	0,76	2	**PHG S2M-138-...**
	73	5,75	146	1,36	0,76	2	**PHG S2M-146-...**
	76	5,98	152	1,36	0,76	2	**PHG S2M-152-...**
	78	6,14	156	1,36	0,76	2	**PHG S2M-156-...**
	80	6,30	160	1,36	0,76	2	**PHG S2M-160-...**
	84	6,61	168	1,36	0,76	2	**PHG S2M-168-...**
	90	7,09	180	1,36	0,76	2	**PHG S2M-180-...**
	91	7,17	182	1,36	0,76	2	**PHG S2M-182-...**
	92	7,24	184	1,36	0,76	2	**PHG S2M-184-...**
	93	7,32	186	1,36	0,76	2	**PHG S2M-186-...**
	96	7,56	192	1,36	0,76	2	**PHG S2M-192-...**
	97	7,64	194	1,36	0,76	2	**PHG S2M-194-...**
	99	7,80	198	1,36	0,76	2	**PHG S2M-198-...**
	100	7,87	200	1,36	0,76	2	**PHG S2M-200-...**
	101	7,95	202	1,36	0,76	2	**PHG S2M-202-...**
	102	8,03	204	1,36	0,76	2	**PHG S2M-204-...**
	112	8,82	224	1,36	0,76	2	**PHG S2M-224-...**
	117	9,21	234	1,36	0,76	2	**PHG S2M-234-...**
	118	9,29	236	1,36	0,76	2	**PHG S2M-236-...**
	120	9,45	240	1,36	0,76	2	**PHG S2M-240-...**
	122	9,61	244	1,36	0,76	2	**PHG S2M-244-...**
	125	9,84	250	1,36	0,76	2	**PHG S2M-250-...**
	130	10,24	260	1,36	0,76	2	**PHG S2M-260-...**
	132	10,39	264	1,36	0,76	2	**PHG S2M-264-...**
	144	11,34	288	1,36	0,76	2	**PHG S2M-288-...**
	156	12,28	312	1,36	0,76	2	**PHG S2M-312-...**
	158	12,44	316	1,36	0,76	2	**PHG S2M-316-...**
	168	13,23	336	1,36	0,76	2	**PHG S2M-336-...**
	177	13,94	354	1,36	0,76	2	**PHG S2M-354-...**
	210	16,54	420	1,36	0,76	2	**PHG S2M-420-...**
	247	19,45	494	1,36	0,76	2	**PHG S2M-494-...**
	290	22,83	580	1,36	0,76	2	**PHG S2M-580-...**
	1500	118,11	3 000	1,36	0,76	2	**PHG S2M-3000-...**
	1850	145,67	3 700	1,36	0,76	2	**PHG S2M-3700-...**
S3M	40	4,72	120	2,20	1,14	3	**PHG S3M-120-...**
	43	5,08	129	2,20	1,14	3	**PHG S3M-129-...**
	48	5,67	144	2,20	1,14	3	**PHG S3M-144-...**
	50	5,91	150	2,20	1,14	3	**PHG S3M-150-...**
	52	6,14	156	2,20	1,14	3	**PHG S3M-156-...**
	54	6,38	162	2,20	1,14	3	**PHG S3M-162-...**
	55	6,50	165	2,20	1,14	3	**PHG S3M-165-...**
	57	6,73	171	2,20	1,14	3	**PHG S3M-171-...**
	58	6,85	174	2,20	1,14	3	**PHG S3M-174-...**
	59	6,97	177	2,20	1,14	3	**PHG S3M-177-...**

Section	Number of teeth	Dimensions Pitch length		h_1	h_2	p	Designation
–	–	in.	mm				–
S3M	60	7,09	180	2,20	1,14	3	**PHG S3M-180-...**
	62	7,32	186	2,20	1,14	3	**PHG S3M-186-...**
	63	7,44	189	2,20	1,14	3	**PHG S3M-189-...**
	64	7,56	192	2,20	1,14	3	**PHG S3M-192-...**
	67	7,91	201	2,20	1,14	3	**PHG S3M-201-...**
	68	8,03	204	2,20	1,14	3	**PHG S3M-204-...**
	69	8,15	207	2,20	1,14	3	**PHG S3M-207-...**
	70	8,27	210	2,20	1,14	3	**PHG S3M-210-...**
	71	8,39	213	2,20	1,14	3	**PHG S3M-213-...**
	73	8,62	219	2,20	1,14	3	**PHG S3M-219-...**
	74	8,74	222	2,20	1,14	3	**PHG S3M-222-...**
	75	8,86	225	2,20	1,14	3	**PHG S3M-225-...**
	77	9,09	231	2,20	1,14	3	**PHG S3M-231-...**
	78	9,21	234	2,20	1,14	3	**PHG S3M-234-...**
	79	9,33	237	2,20	1,14	3	**PHG S3M-237-...**
	80	9,45	240	2,20	1,14	3	**PHG S3M-240-...**
	82	9,69	246	2,20	1,14	3	**PHG S3M-246-...**
	83	9,80	249	2,20	1,14	3	**PHG S3M-249-...**
	84	9,92	252	2,20	1,14	3	**PHG S3M-252-...**
	85	10,04	255	2,20	1,14	3	**PHG S3M-255-...**
	88	10,39	264	2,20	1,14	3	**PHG S3M-264-...**
	89	10,51	267	2,20	1,14	3	**PHG S3M-267-...**
	92	10,87	276	2,20	1,14	3	**PHG S3M-276-...**
	94	11,10	282	2,20	1,14	3	**PHG S3M-282-...**
	96	11,34	288	2,20	1,14	3	**PHG S3M-288-...**
	97	11,46	291	2,20	1,14	3	**PHG S3M-291-...**
	98	11,57	294	2,20	1,14	3	**PHG S3M-294-...**
	99	11,69	297	2,20	1,14	3	**PHG S3M-297-...**
	100	11,81	300	2,20	1,14	3	**PHG S3M-300-...**
	104	12,28	312	2,20	1,14	3	**PHG S3M-312-...**
	106	12,52	318	2,20	1,14	3	**PHG S3M-318-...**
	107	12,64	321	2,20	1,14	3	**PHG S3M-321-...**
	109	12,87	327	2,20	1,14	3	**PHG S3M-327-...**
	110	12,99	330	2,20	1,14	3	**PHG S3M-330-...**
	111	13,11	333	2,20	1,14	3	**PHG S3M-333-...**
	113	13,35	339	2,20	1,14	3	**PHG S3M-339-...**
	115	13,58	345	2,20	1,14	3	**PHG S3M-345-...**
	117	13,82	351	2,20	1,14	3	**PHG S3M-351-...**
	118	13,94	354	2,20	1,14	3	**PHG S3M-354-...**
	119	14,06	357	2,20	1,14	3	**PHG S3M-357-...**
	120	14,17	360	2,20	1,14	3	**PHG S3M-360-...**
	121	14,29	363	2,20	1,14	3	**PHG S3M-363-...**
	123	14,53	369	2,20	1,14	3	**PHG S3M-369-...**
	128	15,12	384	2,20	1,14	3	**PHG S3M-384-...**
	135	15,94	405	2,20	1,14	3	**PHG S3M-405-...**
	136	16,06	408	2,20	1,14	3	**PHG S3M-408-...**
	139	16,42	417	2,20	1,14	3	**PHG S3M-417-...**
	140	16,54	420	2,20	1,14	3	**PHG S3M-420-...**
	144	17,01	432	2,20	1,14	3	**PHG S3M-432-...**
	149	17,60	447	2,20	1,14	3	**PHG S3M-447-...**
	151	17,83	453	2,20	1,14	3	**PHG S3M-453-...**
	153	18,07	459	2,20	1,14	3	**PHG S3M-459-...**
	155	18,31	465	2,20	1,14	3	**PHG S3M-465-...**
	156	18,43	468	2,20	1,14	3	**PHG S3M-468-...**
	162	19,13	486	2,20	1,14	3	**PHG S3M-486-...**

To complete designation add belt width in mm.
Non-standard lengths may also be available.
Full sleeves are available in various widths. Please contact your SKF Authorized Distributor.
For polyurethane version, add "PU" to the profile type. For example: PHG S14MPU-1000-...

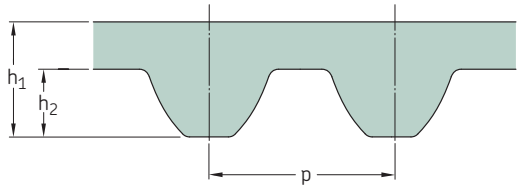

Section	Number of teeth	Dimensions Pitch length		h_1	h_2	p	Designation
–	–	in.	mm				–
S3M	167	19,72	501	2,20	1,14	3	**PHG S3M-501-...**
	168	19,84	504	2,20	1,14	3	**PHG S3M-504-...**
	169	19,96	507	2,20	1,14	3	**PHG S3M-507-...**
	179	21,14	537	2,20	1,14	3	**PHG S3M-537-...**
	188	22,20	564	2,20	1,14	3	**PHG S3M-564-...**
	191	22,56	573	2,20	1,14	3	**PHG S3M-573-...**
	195	23,03	585	2,20	1,14	3	**PHG S3M-585-...**
	199	23,50	597	2,20	1,14	3	**PHG S3M-597-...**
	202	23,86	606	2,20	1,14	3	**PHG S3M-606-...**
	207	24,45	621	2,20	1,14	3	**PHG S3M-621-...**
	211	24,92	633	2,20	1,14	3	**PHG S3M-633-...**
	212	25,04	636	2,20	1,14	3	**PHG S3M-636-...**
	217	25,63	651	2,20	1,14	3	**PHG S3M-651-...**
	219	25,87	657	2,20	1,14	3	**PHG S3M-657-...**
	220	25,98	660	2,20	1,14	3	**PHG S3M-660-...**
	222	26,22	666	2,20	1,14	3	**PHG S3M-666-...**
	230	27,17	690	2,20	1,14	3	**PHG S3M-690-...**
	233	27,52	699	2,20	1,14	3	**PHG S3M-699-...**
	238	28,11	714	2,20	1,14	3	**PHG S3M-714-...**
	240	29,53	750	2,20	1,14	3	**PHG S3M-750-...**
	268	31,65	804	2,20	1,14	3	**PHG S3M-804-...**
	298	35,20	894	2,20	1,14	3	**PHG S3M-894-...**
	350	41,34	1 050	2,20	1,14	3	**PHG S3M-1050-...**
	375	44,29	1 125	2,20	1,14	3	**PHG S3M-1125-...**
	474	55,98	1 422	2,20	1,14	3	**PHG S3M-1422-...**
	532	62,83	1 596	2,20	1,14	3	**PHG S3M-1596-...**
	1465	173,03	4 395	2,20	1,14	3	**PHG S3M-4395-...**
	1568	185,20	4 704	2,20	1,14	3	**PHG S3M-4704-...**
	2170	256,30	6 510	2,20	1,14	3	**PHG S3M-6510-...**
S4.5M	40	7,09	180	2,81	1,71	4.5	**PHG S4.5M-180-...**
	44	7,80	198	2,81	1,71	4.5	**PHG S4.5M-198-...**
	50	8,86	225	2,81	1,71	4.5	**PHG S4.5M-225-...**
	53	9,41	239	2,81	1,71	4.5	**PHG S4.5M-239-...**
	56	9,92	252	2,81	1,71	4.5	**PHG S4.5M-252-...**
	61	10,83	275	2,81	1,71	4.5	**PHG S4.5M-275-...**
	62	10,98	279	2,81	1,71	4.5	**PHG S4.5M-279-...**
	63	11,18	284	2,81	1,71	4.5	**PHG S4.5M-284-...**
	66	11,69	297	2,81	1,71	4.5	**PHG S4.5M-297-...**
	70	12,40	315	2,81	1,71	4.5	**PHG S4.5M-315-...**
	73	12,95	329	2,81	1,71	4.5	**PHG S4.5M-329-...**
	74	13,11	333	2,81	1,71	4.5	**PHG S4.5M-333-...**
	75	13,31	338	2,81	1,71	4.5	**PHG S4.5M-338-...**
	76	13,46	342	2,81	1,71	4.5	**PHG S4.5M-342-...**
	78	13,82	351	2,81	1,71	4.5	**PHG S4.5M-351-...**
	80	14,17	360	2,81	1,71	4.5	**PHG S4.5M-360-...**
	82	14,53	369	2,81	1,71	4.5	**PHG S4.5M-369-...**
	84	15,04	382	2,81	1,71	4.5	**PHG S4.5M-382-...**
	86	15,24	387	2,81	1,71	4.5	**PHG S4.5M-387-...**
	88	15,59	396	2,81	1,71	4.5	**PHG S4.5M-396-...**
	92	16,30	414	2,81	1,71	4.5	**PHG S4.5M-414-...**
	97	17,20	437	2,81	1,71	4.5	**PHG S4.5M-437-...**
	100	17,72	450	2,81	1,71	4.5	**PHG S4.5M-450-...**
	112	19,84	504	2,81	1,71	4.5	**PHG S4.5M-504-...**
	124	21,97	558	2,81	1,71	4.5	**PHG S4.5M-558-...**

Section	Number of teeth	Dimensions Pitch length		h_1	h_2	p	Designation
–	–	in.	mm				–
S4.5M	125	22,17	563	2,81	1,71	4.5	**PHG S4.5M-563-...**
	140	24,80	630	2,81	1,71	4.5	**PHG S4.5M-630-...**
	145	25,71	653	2,81	1,71	4.5	**PHG S4.5M-653-...**
	158	27,99	711	2,81	1,71	4.5	**PHG S4.5M-711-...**
	192	34,02	864	2,81	1,71	4.5	**PHG S4.5M-864-...**
	201	35,63	905	2,81	1,71	4.5	**PHG S4.5M-905-...**
	207	36,69	932	2,81	1,71	4.5	**PHG S4.5M-932-...**
S5M	30	5,91	150	3,41	1,91	5	**PHG S5M-150-...**
	40	7,87	200	3,41	1,91	5	**PHG S5M-200-...**
	50	9,84	250	3,41	1,91	5	**PHG S5M-250-...**
	51	10,04	255	3,41	1,91	5	**PHG S5M-255-...**
	53	10,43	265	3,41	1,91	5	**PHG S5M-265-...**
	54	10,63	270	3,41	1,91	5	**PHG S5M-270-...**
	57	11,22	285	3,41	1,91	5	**PHG S5M-285-...**
	59	11,61	295	3,41	1,91	5	**PHG S5M-295-...**
	64	12,60	320	3,41	1,91	5	**PHG S5M-320-...**
	65	12,80	325	3,41	1,91	5	**PHG S5M-325-...**
	69	13,58	345	3,41	1,91	5	**PHG S5M-345-...**
	70	13,78	350	3,41	1,91	5	**PHG S5M-350-...**
	75	14,76	375	3,41	1,91	5	**PHG S5M-375-...**
	78	15,35	390	3,41	1,91	5	**PHG S5M-390-...**
	80	15,75	400	3,41	1,91	5	**PHG S5M-400-...**
	82	16,14	410	3,41	1,91	5	**PHG S5M-410-...**
	85	16,73	425	3,41	1,91	5	**PHG S5M-425-...**
	90	17,72	450	3,41	1,91	5	**PHG S5M-450-...**
	95	18,70	475	3,41	1,91	5	**PHG S5M-475-...**
	98	19,29	490	3,41	1,91	5	**PHG S5M-490-...**
	100	19,69	500	3,41	1,91	5	**PHG S5M-500-...**
	104	20,47	520	3,41	1,91	5	**PHG S5M-520-...**
	105	20,67	525	3,41	1,91	5	**PHG S5M-525-...**
	112	22,05	560	3,41	1,91	5	**PHG S5M-560-...**
	113	22,24	565	3,41	1,91	5	**PHG S5M-565-...**
	115	22,64	575	3,41	1,91	5	**PHG S5M-575-...**
	120	23,62	600	3,41	1,91	5	**PHG S5M-600-...**
	125	24,61	625	3,41	1,91	5	**PHG S5M-625-...**
	130	25,59	650	3,41	1,91	5	**PHG S5M-650-...**
	133	26,18	665	3,41	1,91	5	**PHG S5M-665-...**
	134	26,38	670	3,41	1,91	5	**PHG S5M-670-...**
	135	26,57	675	3,41	1,91	5	**PHG S5M-675-...**
	140	27,56	700	3,41	1,91	5	**PHG S5M-700-...**
	150	29,53	750	3,41	1,91	5	**PHG S5M-750-...**
	153	30,12	765	3,41	1,91	5	**PHG S5M-765-...**
	156	30,71	780	3,41	1,91	5	**PHG S5M-780-...**
	160	31,50	800	3,41	1,91	5	**PHG S5M-800-...**
	162	31,89	810	3,41	1,91	5	**PHG S5M-810-...**
	165	32,48	825	3,41	1,91	5	**PHG S5M-825-...**
	166	32,68	830	3,41	1,91	5	**PHG S5M-830-...**
	170	33,46	850	3,41	1,91	5	**PHG S5M-850-...**
	178	35,04	890	3,41	1,91	5	**PHG S5M-890-...**
	180	35,43	900	3,41	1,91	5	**PHG S5M-900-...**
	190	37,40	950	3,41	1,91	5	**PHG S5M-950-...**
	195	38,39	975	3,41	1,91	5	**PHG S5M-975-...**
	200	39,37	1 000	3,41	1,91	5	**PHG S5M-1000-...**
	210	41,34	1 050	3,41	1,91	5	**PHG S5M-1050-...**

To complete designation add belt width in mm.
Non-standard lengths may also be available.
Full sleeves are available in various widths. Please contact your SKF Authorized Distributor.
For polyurethane version, add "PU" to the profile type. For example: PHG S14MPU-1000-...

Section	Number of teeth	Dimensions Pitch length		h_1	h_2	p	Designation
–	–	in.	mm				–
S5M	220	43,31	1 100	3,41	1,91	5	**PHG S5M-1100-...**
	225	44,29	1 125	3,41	1,91	5	**PHG S5M-1125-...**
	229	45,08	1 145	3,41	1,91	5	**PHG S5M-1145-...**
	245	48,23	1 225	3,41	1,91	5	**PHG S5M-1225-...**
	254	50,00	1 270	3,41	1,91	5	**PHG S5M-1270-...**
	270	53,15	1 350	3,41	1,91	5	**PHG S5M-1350-...**
	360	70,87	1 800	3,41	1,91	5	**PHG S5M-1800-...**
	400	78,74	2 000	3,41	1,91	5	**PHG S5M-2000-...**
	614	120,87	3 070	3,41	1,91	5	**PHG S5M-3070-...**
	800	157,48	4 000	3,41	1,91	5	**PHG S5M-4000-...**
S8M	47	14,80	376	5,30	3,05	8	**PHG S8M-376-...**
	48	15,12	384	5,30	3,05	8	**PHG S8M-384-...**
	49	15,43	392	5,30	3,05	8	**PHG S8M-392-...**
	55	17,32	440	5,30	3,05	8	**PHG S8M-440-...**
	60	18,90	480	5,30	3,05	8	**PHG S8M-480-...**
	62	19,53	496	5,30	3,05	8	**PHG S8M-496-...**
	64	20,16	512	5,30	3,05	8	**PHG S8M-512-...**
	65	20,47	520	5,30	3,05	8	**PHG S8M-520-...**
	66	20,79	528	5,30	3,05	8	**PHG S8M-528-...**
	67	21,10	536	5,30	3,05	8	**PHG S8M-536-...**
	70	22,05	560	5,30	3,05	8	**PHG S8M-560-...**
	73	22,99	584	5,30	3,05	8	**PHG S8M-584-...**
	75	23,62	600	5,30	3,05	8	**PHG S8M-600-...**
	79	24,88	632	5,30	3,05	8	**PHG S8M-632-...**
	80	25,20	640	5,30	3,05	8	**PHG S8M-640-...**
	82	25,83	656	5,30	3,05	8	**PHG S8M-656-...**
	85	26,77	680	5,30	3,05	8	**PHG S8M-680-...**
	86	27,09	688	5,30	3,05	8	**PHG S8M-688-...**
	89	28,03	712	5,30	3,05	8	**PHG S8M-712-...**
	90	28,35	720	5,30	3,05	8	**PHG S8M-720-...**
	91	28,66	728	5,30	3,05	8	**PHG S8M-728-...**
	95	29,92	760	5,30	3,05	8	**PHG S8M-760-...**
	96	30,24	768	5,30	3,05	8	**PHG S8M-768-...**
	98	30,87	784	5,30	3,05	8	**PHG S8M-784-...**
	100	31,50	800	5,30	3,05	8	**PHG S8M-800-...**
	103	32,44	824	5,30	3,05	8	**PHG S8M-824-...**
	105	33,07	840	5,30	3,05	8	**PHG S8M-840-...**
	106	33,39	848	5,30	3,05	8	**PHG S8M-848-...**
	108	34,02	864	5,30	3,05	8	**PHG S8M-864-...**
	109	34,33	872	5,30	3,05	8	**PHG S8M-872-...**
	110	34,65	880	5,30	3,05	8	**PHG S8M-880-...**
	112	35,28	896	5,30	3,05	8	**PHG S8M-896-...**
	114	35,91	912	5,30	3,05	8	**PHG S8M-912-...**
	115	36,22	920	5,30	3,05	8	**PHG S8M-920-...**
	116	36,54	928	5,30	3,05	8	**PHG S8M-928-...**
	118	37,17	944	5,30	3,05	8	**PHG S8M-944-...**
	120	37,80	960	5,30	3,05	8	**PHG S8M-960-...**
	122	38,43	976	5,30	3,05	8	**PHG S8M-976-...**
	123	38,74	984	5,30	3,05	8	**PHG S8M-984-...**
	124	39,06	992	5,30	3,05	8	**PHG S8M-992-...**
	125	39,37	1 000	5,30	3,05	8	**PHG S8M-1000-...**
	126	39,69	1 008	5,30	3,05	8	**PHG S8M-1008-...**
	129	40,63	1 032	5,30	3,05	8	**PHG S8M-1032-...**
	130	40,94	1 040	5,30	3,05	8	**PHG S8M-1040-...**
	132	41,57	1 056	5,30	3,05	8	**PHG S8M-1056-...**
	133	41,89	1 064	5,30	3,05	8	**PHG S8M-1064-...**
	135	42,52	1 080	5,30	3,05	8	**PHG S8M-1080-...**
	137	43,15	1 096	5,30	3,05	8	**PHG S8M-1096-...**
	138	43,46	1 104	5,30	3,05	8	**PHG S8M-1104-...**
	140	44,09	1 120	5,30	3,05	8	**PHG S8M-1120-...**
	141	44,41	1 128	5,30	3,05	8	**PHG S8M-1128-...**
	142	44,72	1 136	5,30	3,05	8	**PHG S8M-1136-...**
	143	45,04	1 144	5,30	3,05	8	**PHG S8M-1144-...**
	144	45,35	1 152	5,30	3,05	8	**PHG S8M-1152-...**
	145	45,67	1 160	5,30	3,05	8	**PHG S8M-1160-...**
	146	45,98	1 168	5,30	3,05	8	**PHG S8M-1168-...**
	148	46,61	1 184	5,30	3,05	8	**PHG S8M-1184-...**
	149	46,93	1 192	5,30	3,05	8	**PHG S8M-1192-...**
	150	47,24	1 200	5,30	3,05	8	**PHG S8M-1200-...**
	151	47,56	1 208	5,30	3,05	8	**PHG S8M-1208-...**
	152	47,87	1 216	5,30	3,05	8	**PHG S8M-1216-...**
	153	48,19	1 224	5,30	3,05	8	**PHG S8M-1224-...**
	155	48,82	1 240	5,30	3,05	8	**PHG S8M-1240-...**
	156	49,13	1 248	5,30	3,05	8	**PHG S8M-1248-...**
	157	49,45	1 256	5,30	3,05	8	**PHG S8M-1256-...**
	158	49,76	1 264	5,30	3,05	8	**PHG S8M-1264-...**

Section	Number of teeth	Dimensions Pitch length		h_1	h_2	p	Designation
–	–	in.	mm				–
S8M	160	50,39	1 280	5,30	3,05	8	**PHG S8M-1280-...**
	162	51,02	1 296	5,30	3,05	8	**PHG S8M-1296-...**
	163	51,34	1 304	5,30	3,05	8	**PHG S8M-1304-...**
	164	51,65	1 312	5,30	3,05	8	**PHG S8M-1312-...**
	165	51,97	1 320	5,30	3,05	8	**PHG S8M-1320-...**
	168	52,91	1 344	5,30	3,05	8	**PHG S8M-1344-...**
	169	53,23	1 352	5,30	3,05	8	**PHG S8M-1352-...**
	170	53,54	1 360	5,30	3,05	8	**PHG S8M-1360-...**
	173	54,49	1 384	5,30	3,05	8	**PHG S8M-1384-...**
	174	54,80	1 392	5,30	3,05	8	**PHG S8M-1392-...**
	175	55,12	1 400	5,30	3,05	8	**PHG S8M-1400-...**
	178	56,06	1 424	5,30	3,05	8	**PHG S8M-1424-...**
	179	56,38	1 432	5,30	3,05	8	**PHG S8M-1432-...**
	180	56,69	1 440	5,30	3,05	8	**PHG S8M-1440-...**
	185	58,27	1 480	5,30	3,05	8	**PHG S8M-1480-...**
	189	59,53	1 512	5,30	3,05	8	**PHG S8M-1512-...**
	191	60,16	1 528	5,30	3,05	8	**PHG S8M-1528-...**
	192	60,47	1 536	5,30	3,05	8	**PHG S8M-1536-...**
	193	60,79	1 544	5,30	3,05	8	**PHG S8M-1544-...**
	194	61,10	1 552	5,30	3,05	8	**PHG S8M-1552-...**
	200	62,99	1 600	5,30	3,05	8	**PHG S8M-1600-...**
	203	63,94	1 624	5,30	3,05	8	**PHG S8M-1624-...**
	204	64,25	1 632	5,30	3,05	8	**PHG S8M-1632-...**
	206	64,88	1 648	5,30	3,05	8	**PHG S8M-1648-...**
	209	65,83	1 672	5,30	3,05	8	**PHG S8M-1672-...**
	210	66,14	1 680	5,30	3,05	8	**PHG S8M-1680-...**
	212	66,77	1 696	5,30	3,05	8	**PHG S8M-1696-...**
	216	68,03	1 728	5,30	3,05	8	**PHG S8M-1728-...**
	220	69,29	1 760	5,30	3,05	8	**PHG S8M-1760-...**
	222	69,92	1 776	5,30	3,05	8	**PHG S8M-1776-...**
	225	70,87	1 800	5,30	3,05	8	**PHG S8M-1800-...**
	239	75,28	1 912	5,30	3,05	8	**PHG S8M-1912-...**
	250	78,74	2 000	5,30	3,05	8	**PHG S8M-2000-...**
	253	79,69	2 024	5,30	3,05	8	**PHG S8M-2024-...**
	254	80,00	2 032	5,30	3,05	8	**PHG S8M-2032-...**
	256	80,63	2 048	5,30	3,05	8	**PHG S8M-2048-...**
	263	82,83	2 104	5,30	3,05	8	**PHG S8M-2104-...**
	280	88,19	2 240	5,30	3,05	8	**PHG S8M-2240-...**
	284	89,45	2 272	5,30	3,05	8	**PHG S8M-2272-...**
	288	90,71	2 304	5,30	3,05	8	**PHG S8M-2304-...**
	300	94,49	2 400	5,30	3,05	8	**PHG S8M-2400-...**
	304	95,75	2 432	5,30	3,05	8	**PHG S8M-2432-...**
	312	98,27	2 496	5,30	3,05	8	**PHG S8M-2496-...**
	317	99,84	2 536	5,30	3,05	8	**PHG S8M-2536-...**
	320	100,79	2 560	5,30	3,05	8	**PHG S8M-2560-...**
	325	102,36	2 600	5,30	3,05	8	**PHG S8M-2600-...**
	350	110,24	2 800	5,30	3,05	8	**PHG S8M-2800-...**
	356	112,13	2 848	5,30	3,05	8	**PHG S8M-2848-...**
	360	113,39	2 880	5,30	3,05	8	**PHG S8M-2880-...**
	375	118,11	3 000	5,30	3,05	8	**PHG S8M-3000-...**
	400	125,98	3 200	5,30	3,05	8	**PHG S8M-3200-...**
	450	141,73	3 600	5,30	3,05	8	**PHG S8M-3600-...**
	465	146,46	3 720	5,30	3,05	8	**PHG S8M-3720-...**
	500	157,48	4 000	5,30	3,05	8	**PHG S8M-4000-...**
	585	184,25	4 680	5,30	3,05	8	**PHG S8M-4680-...**
	617	194,33	4 936	5,30	3,05	8	**PHG S8M-4936-...**
	635	200,00	5 080	5,30	3,05	8	**PHG S8M-5080-...**
	700	220,47	5 600	5,30	3,05	8	**PHG S8M-5600-...**
	712	224,25	5 696	5,30	3,05	8	**PHG S8M-5696-...**
	830	261,42	6 640	5,30	3,05	8	**PHG S8M-6640-...**
S14M	51	28,11	714	10,20	5,30	14	**PHG S14M-714-...**
	72	39,69	1 008	10,20	5,30	14	**PHG S14M-1008-...**
	74	40,79	1 036	10,20	5,30	14	**PHG S14M-1036-...**
	80	44,09	1 120	10,20	5,30	14	**PHG S14M-1120-...**
	85	46,85	1 190	10,20	5,30	14	**PHG S14M-1190-...**
	89	49,06	1 246	10,20	5,30	14	**PHG S14M-1246-...**
	100	55,12	1 400	10,20	5,30	14	**PHG S14M-1400-...**
	104	57,32	1 456	10,20	5,30	14	**PHG S14M-1456-...**
	110	60,63	1 540	10,20	5,30	14	**PHG S14M-1540-...**
	115	63,39	1 610	10,20	5,30	14	**PHG S14M-1610-...**
	118	65,04	1 652	10,20	5,30	14	**PHG S14M-1652-...**
	125	68,90	1 750	10,20	5,30	14	**PHG S14M-1750-...**
	129	71,10	1 806	10,20	5,30	14	**PHG S14M-1806-...**
	135	74,41	1 890	10,20	5,30	14	**PHG S14M-1890-...**
	140	77,17	1 960	10,20	5,30	14	**PHG S14M-1960-...**
	143	78,82	2 002	10,20	5,30	14	**PHG S14M-2002-...**

To complete designation add belt width in mm.
Non-standard lengths may also be available.
Full sleeves are available in various widths. Please contact your SKF Authorized Distributor.
For polyurethane version, add "PU" to the profile type. For example: PHG S14MPU-1000-...

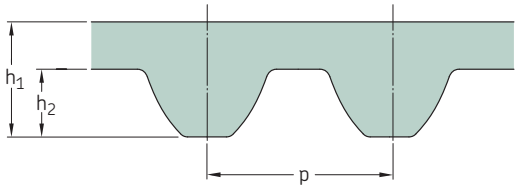

Section	Number of teeth	Dimensions Pitch length					Designation
				h_1	h_2	p	
–	–	in.	mm				–
S14M	150	82,68	2 100	10,20	5,30	14	**PHG S14M-2100-...**
	157	86,54	2 198	10,20	5,30	14	**PHG S14M-2198-...**
	160	88,19	2 240	10,20	5,30	14	**PHG S14M-2240-...**
	165	90,94	2 310	10,20	5,30	14	**PHG S14M-2310-...**
	170	93,70	2 380	10,20	5,30	14	**PHG S14M-2380-...**
	175	96,46	2 450	10,20	5,30	14	**PHG S14M-2450-...**
	185	101,97	2 590	10,20	5,30	14	**PHG S14M-2590-...**
	190	104,72	2 660	10,20	5,30	14	**PHG S14M-2660-...**
	200	110,24	2 800	10,20	5,30	14	**PHG S14M-2800-...**
	201	110,79	2 814	10,20	5,30	14	**PHG S14M-2814-...**
	225	124,02	3 150	10,20	5,30	14	**PHG S14M-3150-...**
	250	137,80	3 500	10,20	5,30	14	**PHG S14M-3500-...**
	275	151,57	3 850	10,20	5,30	14	**PHG S14M-3850-...**
	286	157,64	4 004	10,20	5,30	14	**PHG S14M-4004-...**
	315	173,62	4 410	10,20	5,30	14	**PHG S14M-4410-...**
	322	177,48	4 508	10,20	5,30	14	**PHG S14M-4508-...**
	358	197,32	5 012	10,20	5,30	14	**PHG S14M-5012-...**

To complete designation add belt width in mm.
Non-standard lengths may also be available.
Full sleeves are available in various widths. Please contact your SKF Authorized Distributor.
For polyurethane version, add "PU" to the profile type. For example: PHG S14MPU-1000-...

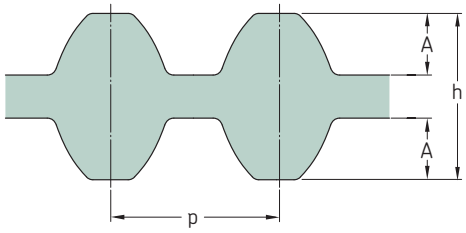

Section	Number of teeth	Dimensions Pitch length		h	A	p	Designation
–	–	in.	mm				–
DS5M	100	19,69	500	4,96	1,91	5	**PHG DS5M-500-...**
	104	20,47	520	4,96	1,91	5	**PHG DS5M-520-...**
	105	20,67	525	4,96	1,91	5	**PHG DS5M-525-...**
	112	22,05	560	4,96	1,91	5	**PHG DS5M-560-...**
	113	22,24	565	4,96	1,91	5	**PHG DS5M-565-...**
	115	22,64	575	4,96	1,91	5	**PHG DS5M-575-...**
	120	23,62	600	4,96	1,91	5	**PHG DS5M-600-...**
	125	24,61	625	4,96	1,91	5	**PHG DS5M-625-...**
	130	25,59	650	4,96	1,91	5	**PHG DS5M-650-...**
	133	26,18	665	4,96	1,91	5	**PHG DS5M-665-...**
	134	26,38	670	4,96	1,91	5	**PHG DS5M-670-...**
	135	26,57	675	4,96	1,91	5	**PHG DS5M-675-...**
	140	27,56	700	4,96	1,91	5	**PHG DS5M-700-...**
	150	29,53	750	4,96	1,91	5	**PHG DS5M-750-...**
	153	30,12	765	4,96	1,91	5	**PHG DS5M-765-...**
	156	30,71	780	4,96	1,91	5	**PHG DS5M-780-...**
	160	31,50	800	4,96	1,91	5	**PHG DS5M-800-...**
	162	31,89	810	4,96	1,91	5	**PHG DS5M-810-...**
	165	32,48	825	4,96	1,91	5	**PHG DS5M-825-...**
	166	32,68	830	4,96	1,91	5	**PHG DS5M-830-...**
	170	33,46	850	4,96	1,91	5	**PHG DS5M-850-...**
	178	35,04	890	4,96	1,91	5	**PHG DS5M-890-...**
	180	35,43	900	4,96	1,91	5	**PHG DS5M-900-...**
	190	37,40	950	4,96	1,91	5	**PHG DS5M-950-...**
	195	38,39	975	4,96	1,91	5	**PHG DS5M-975-...**
	200	39,37	1 000	4,96	1,91	5	**PHG DS5M-1000-...**
	210	41,34	1 050	4,96	1,91	5	**PHG DS5M-1050-...**
	220	43,31	1 100	4,96	1,91	5	**PHG DS5M-1100-...**
	225	44,29	1 125	4,96	1,91	5	**PHG DS5M-1125-...**
	229	45,08	1 145	4,96	1,91	5	**PHG DS5M-1145-...**
	245	48,23	1 225	4,96	1,91	5	**PHG DS5M-1225-...**
	254	50,00	1 270	4,96	1,91	5	**PHG DS5M-1270-...**
	270	53,15	1 350	4,96	1,91	5	**PHG DS5M-1350-...**
DS8M	64	20,16	512	7,47	3,05	8	**PHG DS8M-512-...**
	65	20,47	520	7,47	3,05	8	**PHG DS8M-520-...**
	66	20,79	528	7,47	3,05	8	**PHG DS8M-528-...**
	67	21,10	536	7,47	3,05	8	**PHG DS8M-536-...**
	70	22,05	560	7,47	3,05	8	**PHG DS8M-560-...**
	73	22,99	584	7,47	3,05	8	**PHG DS8M-584-...**
	75	23,62	600	7,47	3,05	8	**PHG DS8M-600-...**
	79	24,88	632	7,47	3,05	8	**PHG DS8M-632-...**
	80	25,20	640	7,47	3,05	8	**PHG DS8M-640-...**
	82	25,83	656	7,47	3,05	8	**PHG DS8M-656-...**
	85	26,77	680	7,47	3,05	8	**PHG DS8M-680-...**
	86	27,09	688	7,47	3,05	8	**PHG DS8M-688-...**
	89	28,03	712	7,47	3,05	8	**PHG DS8M-712-...**
	90	28,35	720	7,47	3,05	8	**PHG DS8M-720-...**
	91	28,66	728	7,47	3,05	8	**PHG DS8M-728-...**
	95	29,92	760	7,47	3,05	8	**PHG DS8M-760-...**
	96	30,24	768	7,47	3,05	8	**PHG DS8M-768-...**
	98	30,87	784	7,47	3,05	8	**PHG DS8M-784-...**
	100	31,50	800	7,47	3,05	8	**PHG DS8M-800-...**
	103	32,44	824	7,47	3,05	8	**PHG DS8M-824-...**
	105	33,07	840	7,47	3,05	8	**PHG DS8M-840-...**

Section	Number of teeth	Dimensions Pitch length		h	A	p	Designation
–	–	in.	mm				–
DS8M	106	33,39	848	7,47	3,05	8	**PHG DS8M-848-...**
	108	34,02	864	7,47	3,05	8	**PHG DS8M-864-...**
	109	34,33	872	7,47	3,05	8	**PHG DS8M-872-...**
	110	34,65	880	7,47	3,05	8	**PHG DS8M-880-...**
	112	35,28	896	7,47	3,05	8	**PHG DS8M-896-...**
	114	35,91	912	7,47	3,05	8	**PHG DS8M-912-...**
	115	36,22	920	7,47	3,05	8	**PHG DS8M-920-...**
	116	36,54	928	7,47	3,05	8	**PHG DS8M-928-...**
	118	37,17	944	7,47	3,05	8	**PHG DS8M-944-...**
	120	37,80	960	7,47	3,05	8	**PHG DS8M-960-...**
	122	38,43	976	7,47	3,05	8	**PHG DS8M-976-...**
	123	38,74	984	7,47	3,05	8	**PHG DS8M-984-...**
	124	39,06	992	7,47	3,05	8	**PHG DS8M-992-...**
	125	39,37	1 000	7,47	3,05	8	**PHG DS8M-1000-...**
	126	39,69	1 008	7,47	3,05	8	**PHG DS8M-1008-...**
	129	40,63	1 032	7,47	3,05	8	**PHG DS8M-1032-...**
	130	40,94	1 040	7,47	3,05	8	**PHG DS8M-1040-...**
	132	41,57	1 056	7,47	3,05	8	**PHG DS8M-1056-...**
	133	41,89	1 064	7,47	3,05	8	**PHG DS8M-1064-...**
	135	42,52	1 080	7,47	3,05	8	**PHG DS8M-1080-...**
	137	43,15	1 096	7,47	3,05	8	**PHG DS8M-1096-...**
	138	43,46	1 104	7,47	3,05	8	**PHG DS8M-1104-...**
	140	44,09	1 120	7,47	3,05	8	**PHG DS8M-1120-...**
	141	44,41	1 128	7,47	3,05	8	**PHG DS8M-1128-...**
	142	44,72	1 136	7,47	3,05	8	**PHG DS8M-1136-...**
	143	45,04	1 144	7,47	3,05	8	**PHG DS8M-1144-...**
	144	45,35	1 152	7,47	3,05	8	**PHG DS8M-1152-...**
	145	45,67	1 160	7,47	3,05	8	**PHG DS8M-1160-...**
	146	45,98	1 168	7,47	3,05	8	**PHG DS8M-1168-...**
	148	46,61	1 184	7,47	3,05	8	**PHG DS8M-1184-...**
	149	46,93	1 192	7,47	3,05	8	**PHG DS8M-1192-...**
	150	47,24	1 200	7,47	3,05	8	**PHG DS8M-1200-...**
	151	47,56	1 208	7,47	3,05	8	**PHG DS8M-1208-...**
	152	47,87	1 216	7,47	3,05	8	**PHG DS8M-1216-...**
	153	48,19	1 224	7,47	3,05	8	**PHG DS8M-1224-...**
	155	48,82	1 240	7,47	3,05	8	**PHG DS8M-1240-...**
	156	49,13	1 248	7,47	3,05	8	**PHG DS8M-1248-...**
	157	49,45	1 256	7,47	3,05	8	**PHG DS8M-1256-...**
	158	49,76	1 264	7,47	3,05	8	**PHG DS8M-1264-...**
	160	50,39	1 280	7,47	3,05	8	**PHG DS8M-1280-...**
	162	51,02	1 296	7,47	3,05	8	**PHG DS8M-1296-...**
	163	51,34	1 304	7,47	3,05	8	**PHG DS8M-1304-...**
	164	51,65	1 312	7,47	3,05	8	**PHG DS8M-1312-...**
	165	51,97	1 320	7,47	3,05	8	**PHG DS8M-1320-...**
	168	52,91	1 344	7,47	3,05	8	**PHG DS8M-1344-...**
	169	53,23	1 352	7,47	3,05	8	**PHG DS8M-1352-...**
	170	53,54	1 360	7,47	3,05	8	**PHG DS8M-1360-...**
	173	54,49	1 384	7,47	3,05	8	**PHG DS8M-1384-...**
	174	54,80	1 392	7,47	3,05	8	**PHG DS8M-1392-...**
	175	55,12	1 400	7,47	3,05	8	**PHG DS8M-1400-...**
	178	56,06	1 424	7,47	3,05	8	**PHG DS8M-1424-...**
	179	56,38	1 432	7,47	3,05	8	**PHG DS8M-1432-...**
	180	56,69	1 440	7,47	3,05	8	**PHG DS8M-1440-...**
	185	58,27	1 480	7,47	3,05	8	**PHG DS8M-1480-...**
	189	59,53	1 512	7,47	3,05	8	**PHG DS8M-1512-...**

To complete designation add belt width in mm.
Non-standard lengths may also be available.
Full sleeves are available in various widths. Please contact your SKF Authorized Distributor.
For polyurethane version, add "PU" to the profile type. For example: PHG DS814MPU-6640-...

Double-sided super torque timing belts
DS8M

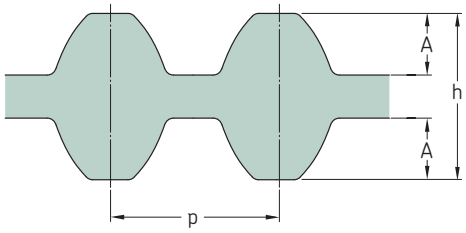

Section	Number of teeth	Dimensions Pitch length		h	A	p	Designation
–	–	in.	mm				–
DS8M	191	60,16	1 528	7,47	3,05	8	**PHG DS8M-1528-...**
	192	60,47	1 536	7,47	3,05	8	**PHG DS8M-1536-...**
	193	60,79	1 544	7,47	3,05	8	**PHG DS8M-1544-...**
	194	61,10	1 552	7,47	3,05	8	**PHG DS8M-1552-...**
	200	62,99	1 600	7,47	3,05	8	**PHG DS8M-1600-...**
	203	63,94	1 624	7,47	3,05	8	**PHG DS8M-1624-...**
	204	64,25	1 632	7,47	3,05	8	**PHG DS8M-1632-...**
	206	64,88	1 648	7,47	3,05	8	**PHG DS8M-1648-...**
	209	65,83	1 672	7,47	3,05	8	**PHG DS8M-1672-...**
	210	66,14	1 680	7,47	3,05	8	**PHG DS8M-1680-...**
	212	66,77	1 696	7,47	3,05	8	**PHG DS8M-1696-...**
	216	68,03	1 728	7,47	3,05	8	**PHG DS8M-1728-...**
	220	69,29	1 760	7,47	3,05	8	**PHG DS8M-1760-...**
	222	69,92	1 776	7,47	3,05	8	**PHG DS8M-1776-...**
	225	70,87	1 800	7,47	3,05	8	**PHG DS8M-1800-...**
	239	75,28	1 912	7,47	3,05	8	**PHG DS8M-1912-...**
	250	78,74	2 000	7,47	3,05	8	**PHG DS8M-2000-...**
	253	79,69	2 024	7,47	3,05	8	**PHG DS8M-2024-...**
	254	80,00	2 032	7,47	3,05	8	**PHG DS8M-2032-...**
	256	80,63	2 048	7,47	3,05	8	**PHG DS8M-2048-...**
	263	82,83	2 104	7,47	3,05	8	**PHG DS8M-2104-...**
	280	88,19	2 240	7,47	3,05	8	**PHG DS8M-2240-...**
	284	89,45	2 272	7,47	3,05	8	**PHG DS8M-2272-...**
	288	90,71	2 304	7,47	3,05	8	**PHG DS8M-2304-...**
	300	94,49	2 400	7,47	3,05	8	**PHG DS8M-2400-...**
	304	95,75	2 432	7,47	3,05	8	**PHG DS8M-2432-...**
	312	98,27	2 496	7,47	3,05	8	**PHG DS8M-2496-...**
	317	99,84	2 536	7,47	3,05	8	**PHG DS8M-2536-...**
	320	100,79	2 560	7,47	3,05	8	**PHG DS8M-2560-...**
	325	102,36	2 600	7,47	3,05	8	**PHG DS8M-2600-...**
	350	110,24	2 800	7,47	3,05	8	**PHG DS8M-2800-...**
	356	112,13	2 848	7,47	3,05	8	**PHG DS8M-2848-...**
	360	113,39	2 880	7,47	3,05	8	**PHG DS8M-2880-...**
	375	118,11	3 000	7,47	3,05	8	**PHG DS8M-3000-...**
	400	125,98	3 200	7,47	3,05	8	**PHG DS8M-3200-...**
	450	141,73	3 600	7,47	3,05	8	**PHG DS8M-3600-...**
	465	146,46	3 720	7,47	3,05	8	**PHG DS8M-3720-...**
	500	157,48	4 000	7,47	3,05	8	**PHG DS8M-4000-...**
	585	184,25	4 680	7,47	3,05	8	**PHG DS8M-4680-...**
	617	194,33	4 936	7,47	3,05	8	**PHG DS8M-4936-...**
	635	200,00	5 080	7,47	3,05	8	**PHG DS8M-5080-...**
	700	220,47	5 600	7,47	3,05	8	**PHG DS8M-5600-...**
	712	224,25	5 696	7,47	3,05	8	**PHG DS8M-5696-...**
	830	261,42	6 640	7,47	3,05	8	**PHG DS8M-6640-...**

To complete designation add belt width in mm.
Non-standard lengths may also be available.
Full sleeves are available in various widths. Please contact your SKF Authorized Distributor.
For polyurethane version, add "PU" to the profile type. For example: PHG DS814MPU-6640-...

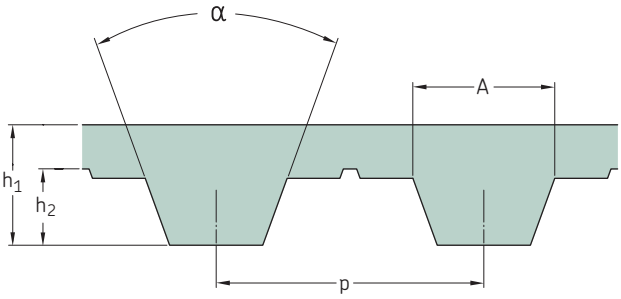

T

Section	Number of teeth	Dimensions Pitch length	h_1	h_2	p	A	α	Designation
–	–	mm					°	–
T2.5	41	102,5	1,3	0,7	2,5	1,50	40	**PHG T2.5-102.5-...**
	48	120,0	1,3	0,7	2,5	1,50	40	**PHG T2.5-120-...**
	58	145,0	1,3	0,7	2,5	1,50	40	**PHG T2.5-145-...**
	60	150,0	1,3	0,7	2,5	1,50	40	**PHG T2.5-150-...**
	64	160,0	1,3	0,7	2,5	1,50	40	**PHG T2.5-160-...**
	66	165,0	1,3	0,7	2,5	1,50	40	**PHG T2.5-165-...**
	68	170,0	1,3	0,7	2,5	1,50	40	**PHG T2.5-170-...**
	71	177,5	1,3	0,7	2,5	1,50	40	**PHG T2.5-177.5-...**
	75	187,5	1,3	0,7	2,5	1,50	40	**PHG T2.5-187.5-...**
	80	200,0	1,3	0,7	2,5	1,50	40	**PHG T2.5-200-...**
	92	230,0	1,3	0,7	2,5	1,50	40	**PHG T2.5-230-...**
	98	245,0	1,3	0,7	2,5	1,50	40	**PHG T2.5-245-...**
	106	265,0	1,3	0,7	2,5	1,50	40	**PHG T2.5-265-...**
	114	285,0	1,3	0,7	2,5	1,50	40	**PHG T2.5-285-...**
	120	300,0	1,3	0,7	2,5	1,50	40	**PHG T2.5-300-...**
	127	317,5	1,3	0,7	2,5	1,50	40	**PHG T2.5-317.5-...**
	132	330,0	1,3	0,7	2,5	1,50	40	**PHG T2.5-330-...**
	134	335,0	1,3	0,7	2,5	1,50	40	**PHG T2.5-335-...**
	140	350,0	1,3	0,7	2,5	1,50	40	**PHG T2.5-350-...**
	152	380,0	1,3	0,7	2,5	1,50	40	**PHG T2.5-380-...**
	156	390,0	1,3	0,7	2,5	1,50	40	**PHG T2.5-390-...**
	160	400,0	1,3	0,7	2,5	1,50	40	**PHG T2.5-400-...**
	164	410,0	1,3	0,7	2,5	1,50	40	**PHG T2.5-410-...**
	168	420,0	1,3	0,7	2,5	1,50	40	**PHG T2.5-420-...**
	188	470,0	1,3	0,7	2,5	1,50	40	**PHG T2.5-470-...**
	192	480,0	1,3	0,7	2,5	1,50	40	**PHG T2.5-480-...**
	200	500,0	1,3	0,7	2,5	1,50	40	**PHG T2.5-500-...**
	216	540,0	1,3	0,7	2,5	1,50	40	**PHG T2.5-540-...**
	248	620,0	1,3	0,7	2,5	1,50	40	**PHG T2.5-620-...**
	254	635,0	1,3	0,7	2,5	1,50	40	**PHG T2.5-635-...**
	260	650,0	1,3	0,7	2,5	1,50	40	**PHG T2.5-650-...**
	276	690,0	1,3	0,7	2,5	1,50	40	**PHG T2.5-690-...**
	282	705,0	1,3	0,7	2,5	1,50	40	**PHG T2.5-705-...**
	315	787,5	1,3	0,7	2,5	1,50	40	**PHG T2.5-787.5-...**
	362	905,0	1,3	0,7	2,5	1,50	40	**PHG T2.5-905-...**
	390	975,0	1,3	0,7	2,5	1,50	40	**PHG T2.5-975-...**
	416	1 040,0	1,3	0,7	2,5	1,50	40	**PHG T2.5-1040-...**
	436	1 090,0	1,3	0,7	2,5	1,50	40	**PHG T2.5-1090-...**
	438	1 095,0	1,3	0,7	2,5	1,50	40	**PHG T2.5-1095-...**
	451	1 127,5	1,3	0,7	2,5	1,50	40	**PHG T2.5-1127.5-...**
	518	1 295,0	1,3	0,7	2,5	1,50	40	**PHG T2.5-1295-...**
	538	1 345,0	1,3	0,7	2,5	1,50	40	**PHG T2.5-1345-...**
T5	23	115,0	2,2	1,2	5,0	2,65	40	**PHG T5-115-...**
	30	150,0	2,2	1,2	5,0	2,65	40	**PHG T5-150-...**
	33	165,0	2,2	1,2	5,0	2,65	40	**PHG T5-165-...**
	37	185,0	2,2	1,2	5,0	2,65	40	**PHG T5-185-...**
	38	190,0	2,2	1,2	5,0	2,65	40	**PHG T5-190-...**
	40	200,0	2,2	1,2	5,0	2,65	40	**PHG T5-200-...**
	42	210,0	2,2	1,2	5,0	2,65	40	**PHG T5-210-...**
	43	215,0	2,2	1,2	5,0	2,65	40	**PHG T5-215-...**
	44	220,0	2,2	1,2	5,0	2,65	40	**PHG T5-220-...**
	45	225,0	2,2	1,2	5,0	2,65	40	**PHG T5-225-...**
	48	240,0	2,2	1,2	5,0	2,65	40	**PHG T5-240-...**
	50	250,0	2,2	1,2	5,0	2,65	40	**PHG T5-250-...**

Section	Number of teeth	Dimensions Pitch length	h_1	h_2	p	A	α	Designation
–	–	mm					°	–
T5	51	255,0	2,2	1,2	5,0	2,65	40	**PHG T5-255-...**
	52	260,0	2,2	1,2	5,0	2,65	40	**PHG T5-260-...**
	55	275,0	2,2	1,2	5,0	2,65	40	**PHG T5-275-...**
	56	280,0	2,2	1,2	5,0	2,65	40	**PHG T5-280-...**
	59	295,0	2,2	1,2	5,0	2,65	40	**PHG T5-295-...**
	60	300,0	2,2	1,2	5,0	2,65	40	**PHG T5-300-...**
	61	305,0	2,2	1,2	5,0	2,65	40	**PHG T5-305-...**
	62	310,0	2,2	1,2	5,0	2,65	40	**PHG T5-310-...**
	65	325,0	2,2	1,2	5,0	2,65	40	**PHG T5-325-...**
	66	330,0	2,2	1,2	5,0	2,65	40	**PHG T5-330-...**
	68	340,0	2,2	1,2	5,0	2,65	40	**PHG T5-340-...**
	70	350,0	2,2	1,2	5,0	2,65	40	**PHG T5-350-...**
	71	355,0	2,2	1,2	5,0	2,65	40	**PHG T5-355-...**
	73	365,0	2,2	1,2	5,0	2,65	40	**PHG T5-365-...**
	75	375,0	2,2	1,2	5,0	2,65	40	**PHG T5-375-...**
	78	390,0	2,2	1,2	5,0	2,65	40	**PHG T5-390-...**
	80	400,0	2,2	1,2	5,0	2,65	40	**PHG T5-400-...**
	82	410,0	2,2	1,2	5,0	2,65	40	**PHG T5-410-...**
	84	420,0	2,2	1,2	5,0	2,65	40	**PHG T5-420-...**
	90	450,0	2,2	1,2	5,0	2,65	40	**PHG T5-450-...**
	91	455,0	2,2	1,2	5,0	2,65	40	**PHG T5-455-...**
	95	475,0	2,2	1,2	5,0	2,65	40	**PHG T5-475-...**
	96	480,0	2,2	1,2	5,0	2,65	40	**PHG T5-480-...**
	100	500,0	2,2	1,2	5,0	2,65	40	**PHG T5-500-...**
	101	505,0	2,2	1,2	5,0	2,65	40	**PHG T5-505-...**
	102	510,0	2,2	1,2	5,0	2,65	40	**PHG T5-510-...**
	105	525,0	2,2	1,2	5,0	2,65	40	**PHG T5-525-...**
	108	540,0	2,2	1,2	5,0	2,65	40	**PHG T5-540-...**
	109	545,0	2,2	1,2	5,0	2,65	40	**PHG T5-545-...**
	110	550,0	2,2	1,2	5,0	2,65	40	**PHG T5-550-...**
	112	560,0	2,2	1,2	5,0	2,65	40	**PHG T5-560-...**
	114	570,0	2,2	1,2	5,0	2,65	40	**PHG T5-570-...**
	115	575,0	2,2	1,2	5,0	2,65	40	**PHG T5-575-...**
	116	580,0	2,2	1,2	5,0	2,65	40	**PHG T5-580-...**
	117	585,0	2,2	1,2	5,0	2,65	40	**PHG T5-585-...**
	120	600,0	2,2	1,2	5,0	2,65	40	**PHG T5-600-...**
	122	610,0	2,2	1,2	5,0	2,65	40	**PHG T5-610-...**
	124	620,0	2,2	1,2	5,0	2,65	40	**PHG T5-620-...**
	126	630,0	2,2	1,2	5,0	2,65	40	**PHG T5-630-...**
	127	635,0	2,2	1,2	5,0	2,65	40	**PHG T5-635-...**
	130	650,0	2,2	1,2	5,0	2,65	40	**PHG T5-650-...**
	133	665,0	2,2	1,2	5,0	2,65	40	**PHG T5-665-...**
	135	675,0	2,2	1,2	5,0	2,65	40	**PHG T5-675-...**
	137	685,0	2,2	1,2	5,0	2,65	40	**PHG T5-685-...**
	138	690,0	2,2	1,2	5,0	2,65	40	**PHG T5-690-...**
	140	700,0	2,2	1,2	5,0	2,65	40	**PHG T5-700-...**
	142	710,0	2,2	1,2	5,0	2,65	40	**PHG T5-710-...**
	144	720,0	2,2	1,2	5,0	2,65	40	**PHG T5-720-...**
	145	725,0	2,2	1,2	5,0	2,65	40	**PHG T5-725-...**
	148	740,0	2,2	1,2	5,0	2,65	40	**PHG T5-740-...**
	150	750,0	2,2	1,2	5,0	2,65	40	**PHG T5-750-...**
	156	780,0	2,2	1,2	5,0	2,65	40	**PHG T5-780-...**
	158	790,0	2,2	1,2	5,0	2,65	40	**PHG T5-790-...**
	160	800,0	2,2	1,2	5,0	2,65	40	**PHG T5-800-...**
	161	805,0	2,2	1,2	5,0	2,65	40	**PHG T5-805-...**

Non-standard lengths may also be available.
To complete designation add belt width in mm.
Full sleeves are available in various widths. Please contact your SKF Authorized Distributor.

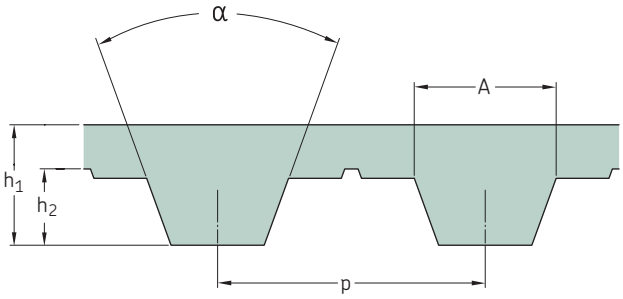

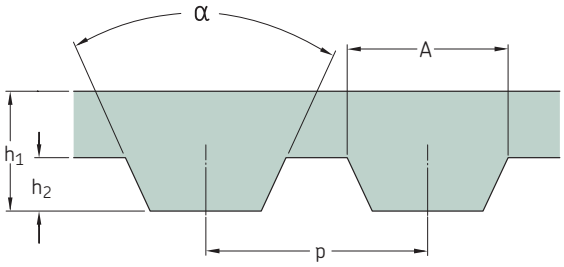

T

Section	Number of teeth	Dimensions Pitch length	h_1	h_2	p	A	α	Designation
–	–	mm					°	–
T5	162	810,0	2,2	1,2	5,0	2,65	40	**PHG T5-810-...**
	163	815,0	2,2	1,2	5,0	2,65	40	**PHG T5-815-...**
	170	850,0	2,2	1,2	5,0	2,65	40	**PHG T5-850-...**
	172	860,0	2,2	1,2	5,0	2,65	40	**PHG T5-860-...**
	177	885,0	2,2	1,2	5,0	2,65	40	**PHG T5-885-...**
	180	900,0	2,2	1,2	5,0	2,65	40	**PHG T5-900-...**
	182	910,0	2,2	1,2	5,0	2,65	40	**PHG T5-910-...**
	188	940,0	2,2	1,2	5,0	2,65	40	**PHG T5-940-...**
	198	990,0	2,2	1,2	5,0	2,65	40	**PHG T5-990-...**
	199	995,0	2,2	1,2	5,0	2,65	40	**PHG T5-995-...**
	200	1 000,0	2,2	1,2	5,0	2,65	40	**PHG T5-1000-...**
	204	1 020,0	2,2	1,2	5,0	2,65	40	**PHG T5-1020-...**
	206	1 030,0	2,2	1,2	5,0	2,65	40	**PHG T5-1030-...**
	209	1 045,0	2,2	1,2	5,0	2,65	40	**PHG T5-1045-...**
	210	1 050,0	2,2	1,2	5,0	2,65	40	**PHG T5-1050-...**
	212	1 060,0	2,2	1,2	5,0	2,65	40	**PHG T5-1060-...**
	215	1 075,0	2,2	1,2	5,0	2,65	40	**PHG T5-1075-...**
	220	1 100,0	2,2	1,2	5,0	2,65	40	**PHG T5-1100-...**
	224	1 120,0	2,2	1,2	5,0	2,65	40	**PHG T5-1120-...**
	228	1 140,0	2,2	1,2	5,0	2,65	40	**PHG T5-1140-...**
	240	1 200,0	2,2	1,2	5,0	2,65	40	**PHG T5-1200-...**
	243	1 215,0	2,2	1,2	5,0	2,65	40	**PHG T5-1215-...**
	252	1 260,0	2,2	1,2	5,0	2,65	40	**PHG T5-1260-...**
	254	1 270,0	2,2	1,2	5,0	2,65	40	**PHG T5-1270-...**
	255	1 275,0	2,2	1,2	5,0	2,65	40	**PHG T5-1275-...**
	260	1 300,0	2,2	1,2	5,0	2,65	40	**PHG T5-1300-...**
	265	1 325,0	2,2	1,2	5,0	2,65	40	**PHG T5-1325-...**
	276	1 380,0	2,2	1,2	5,0	2,65	40	**PHG T5-1380-...**
	278	1 390,0	2,2	1,2	5,0	2,65	40	**PHG T5-1390-...**
	283	1 415,0	2,2	1,2	5,0	2,65	40	**PHG T5-1415-...**
	304	1 520,0	2,2	1,2	5,0	2,65	40	**PHG T5-1520-...**
	326	1 630,0	2,2	1,2	5,0	2,65	40	**PHG T5-1630-...**
	348	1 740,0	2,2	1,2	5,0	2,65	40	**PHG T5-1740-...**
	352	1 760,0	2,2	1,2	5,0	2,65	40	**PHG T5-1760-...**
	360	1 800,0	2,2	1,2	5,0	2,65	40	**PHG T5-1800-...**
	376	1 880,0	2,2	1,2	5,0	2,65	40	**PHG T5-1880-...**
	380	1 900,0	2,2	1,2	5,0	2,65	40	**PHG T5-1900-...**
	388	1 940,0	2,2	1,2	5,0	2,65	40	**PHG T5-1940-...**
	392	1 960,0	2,2	1,2	5,0	2,65	40	**PHG T5-1960-...**
	424	2 120,0	2,2	1,2	5,0	2,65	40	**PHG T5-2120-...**
	432	2 160,0	2,2	1,2	5,0	2,65	40	**PHG T5-2160-...**
	444	2 220,0	2,2	1,2	5,0	2,65	40	**PHG T5-2220-...**
	452	2 260,0	2,2	1,2	5,0	2,65	40	**PHG T5-2260-...**
	456	2 280,0	2,2	1,2	5,0	2,65	40	**PHG T5-2280-...**
	612	3 060,0	2,2	1,2	5,0	2,65	40	**PHG T5-3060-...**
	651	3 255,0	2,2	1,2	5,0	2,65	40	**PHG T5-3255-...**
	658	3 290,0	2,2	1,2	5,0	2,65	40	**PHG T5-3290-...**
	708	3 540,0	2,2	1,2	5,0	2,65	40	**PHG T5-3540-...**
	750	3 750,0	2,2	1,2	5,0	2,65	40	**PHG T5-3750-...**
	815	4 075,0	2,2	1,2	5,0	2,65	40	**PHG T5-4075-...**
T10	26	260,0	4,5	2,5	10,0	5,30	40	**PHG T10-260-...**
	32	320,0	4,5	2,5	10,0	5,30	40	**PHG T10-320-...**
	34	340,0	4,5	2,5	10,0	5,30	40	**PHG T10-340-...**
	37	370,0	4,5	2,5	10,0	5,30	40	**PHG T10-370-...**
	40	400,0	4,5	2,5	10,0	5,30	40	**PHG T10-400-...**

AT

Section	Number of teeth	Dimensions Pitch length	h_1	h_2	p	A	α	Designation
–	–	mm					°	–
T10	41	410,0	4,5	2,5	10,0	5,30	40	**PHG T10-410-...**
	44	440,0	4,5	2,5	10,0	5,30	40	**PHG T10-440-...**
	45	450,0	4,5	2,5	10,0	5,30	40	**PHG T10-450-...**
	46	460,0	4,5	2,5	10,0	5,30	40	**PHG T10-460-...**
	48	480,0	4,5	2,5	10,0	5,30	40	**PHG T10-480-...**
	50	500,0	4,5	2,5	10,0	5,30	40	**PHG T10-500-...**
	53	530,0	4,5	2,5	10,0	5,30	40	**PHG T10-530-...**
	54	540,0	4,5	2,5	10,0	5,30	40	**PHG T10-540-...**
	55	550,0	4,5	2,5	10,0	5,30	40	**PHG T10-550-...**
	56	560,0	4,5	2,5	10,0	5,30	40	**PHG T10-560-...**
	58	580,0	4,5	2,5	10,0	5,30	40	**PHG T10-580-...**
	60	600,0	4,5	2,5	10,0	5,30	40	**PHG T10-600-...**
	61	610,0	4,5	2,5	10,0	5,30	40	**PHG T10-610-...**
	63	630,0	4,5	2,5	10,0	5,30	40	**PHG T10-630-...**
	65	650,0	4,5	2,5	10,0	5,30	40	**PHG T10-650-...**
	66	660,0	4,5	2,5	10,0	5,30	40	**PHG T10-660-...**
	69	690,0	4,5	2,5	10,0	5,30	40	**PHG T10-690-...**
	70	700,0	4,5	2,5	10,0	5,30	40	**PHG T10-700-...**
	72	720,0	4,5	2,5	10,0	5,30	40	**PHG T10-720-...**
	73	730,0	4,5	2,5	10,0	5,30	40	**PHG T10-730-...**
	75	750,0	4,5	2,5	10,0	5,30	40	**PHG T10-750-...**
	77	770,0	4,5	2,5	10,0	5,30	40	**PHG T10-770-...**
	78	780,0	4,5	2,5	10,0	5,30	40	**PHG T10-780-...**
	80	800,0	4,5	2,5	10,0	5,30	40	**PHG T10-800-...**
	81	810,0	4,5	2,5	10,0	5,30	40	**PHG T10-810-...**
	84	840,0	4,5	2,5	10,0	5,30	40	**PHG T10-840-...**
	85	850,0	4,5	2,5	10,0	5,30	40	**PHG T10-850-...**
	88	880,0	4,5	2,5	10,0	5,30	40	**PHG T10-880-...**
	89	890,0	4,5	2,5	10,0	5,30	40	**PHG T10-890-...**
	90	900,0	4,5	2,5	10,0	5,30	40	**PHG T10-900-...**
	91	910,0	4,5	2,5	10,0	5,30	40	**PHG T10-910-...**
	92	920,0	4,5	2,5	10,0	5,30	40	**PHG T10-920-...**
	95	950,0	4,5	2,5	10,0	5,30	40	**PHG T10-950-...**
	96	960,0	4,5	2,5	10,0	5,30	40	**PHG T10-960-...**
	97	970,0	4,5	2,5	10,0	5,30	40	**PHG T10-970-...**
	98	980,0	4,5	2,5	10,0	5,30	40	**PHG T10-980-...**
	100	1 000,0	4,5	2,5	10,0	5,30	40	**PHG T10-1000-...**
	101	1 010,0	4,5	2,5	10,0	5,30	40	**PHG T10-1010-...**
	103	1 030,0	4,5	2,5	10,0	5,30	40	**PHG T10-1030-...**
	104	1 040,0	4,5	2,5	10,0	5,30	40	**PHG T10-1040-...**
	105	1 050,0	4,5	2,5	10,0	5,30	40	**PHG T10-1050-...**
	108	1 080,0	4,5	2,5	10,0	5,30	40	**PHG T10-1080-...**
	110	1 100,0	4,5	2,5	10,0	5,30	40	**PHG T10-1100-...**
	111	1 110,0	4,5	2,5	10,0	5,30	40	**PHG T10-1110-...**
	114	1 140,0	4,5	2,5	10,0	5,30	40	**PHG T10-1140-...**
	115	1 150,0	4,5	2,5	10,0	5,30	40	**PHG T10-1150-...**
	120	1 200,0	4,5	2,5	10,0	5,30	40	**PHG T10-1200-...**
	121	1 210,0	4,5	2,5	10,0	5,30	40	**PHG T10-1210-...**
	124	1 240,0	4,5	2,5	10,0	5,30	40	**PHG T10-1240-...**
	125	1 250,0	4,5	2,5	10,0	5,30	40	**PHG T10-1250-...**
	126	1 260,0	4,5	2,5	10,0	5,30	40	**PHG T10-1260-...**
	128	1 280,0	4,5	2,5	10,0	5,30	40	**PHG T10-1280-...**
	130	1 300,0	4,5	2,5	10,0	5,30	40	**PHG T10-1300-...**
	132	1 320,0	4,5	2,5	10,0	5,30	40	**PHG T10-1320-...**
	135	1 350,0	4,5	2,5	10,0	5,30	40	**PHG T10-1350-...**

Non-standard lengths may also be available.
To complete designation add belt width in mm.
Full sleeves are available in various widths. Please contact your SKF Authorized Distributor.

Section	Number of teeth	Dimensions Pitch length	h_1	h_2	p	A	α	Designation
–	–	mm					°	–
T10	139	1 390,0	4,5	2,5	10,0	5,30	40	**PHG T10-1390-...**
	140	1 400,0	4,5	2,5	10,0	5,30	40	**PHG T10-1400-...**
	142	1 420,0	4,5	2,5	10,0	5,30	40	**PHG T10-1420-...**
	144	1 440,0	4,5	2,5	10,0	5,30	40	**PHG T10-1440-...**
	145	1 450,0	4,5	2,5	10,0	5,30	40	**PHG T10-1450-...**
	146	1 460,0	4,5	2,5	10,0	5,30	40	**PHG T10-1460-...**
	148	1 480,0	4,5	2,5	10,0	5,30	40	**PHG T10-1480-...**
	150	1 500,0	4,5	2,5	10,0	5,30	40	**PHG T10-1500-...**
	152	1 520,0	4,5	2,5	10,0	5,30	40	**PHG T10-1520-...**
	156	1 560,0	4,5	2,5	10,0	5,30	40	**PHG T10-1560-...**
	160	1 600,0	4,5	2,5	10,0	5,30	40	**PHG T10-1600-...**
	161	1 610,0	4,5	2,5	10,0	5,30	40	**PHG T10-1610-...**
	164	1 640,0	4,5	2,5	10,0	5,30	40	**PHG T10-1640-...**
	169	1 690,0	4,5	2,5	10,0	5,30	40	**PHG T10-1690-...**
	170	1 700,0	4,5	2,5	10,0	5,30	40	**PHG T10-1700-...**
	175	1 750,0	4,5	2,5	10,0	5,30	40	**PHG T10-1750-...**
	178	1 780,0	4,5	2,5	10,0	5,30	40	**PHG T10-1780-...**
	180	1 800,0	4,5	2,5	10,0	5,30	40	**PHG T10-1800-...**
	186	1 860,0	4,5	2,5	10,0	5,30	40	**PHG T10-1860-...**
	188	1 880,0	4,5	2,5	10,0	5,30	40	**PHG T10-1880-...**
	196	1 960,0	4,5	2,5	10,0	5,30	40	**PHG T10-1960-...**
	198	1 980,0	4,5	2,5	10,0	5,30	40	**PHG T10-1980-...**
	202	2 020,0	4,5	2,5	10,0	5,30	40	**PHG T10-2020-...**
	208	2 080,0	4,5	2,5	10,0	5,30	40	**PHG T10-2080-...**
	209	2 090,0	4,5	2,5	10,0	5,30	40	**PHG T10-2090-...**
	210	2 100,0	4,5	2,5	10,0	5,30	40	**PHG T10-2100-...**
	220	2 200,0	4,5	2,5	10,0	5,30	40	**PHG T10-2200-...**
	225	2 250,0	4,5	2,5	10,0	5,30	40	**PHG T10-2250-...**
	227	2 270,0	4,5	2,5	10,0	5,30	40	**PHG T10-2270-...**
	230	2 300,0	4,5	2,5	10,0	5,30	40	**PHG T10-2300-...**
	234	2 340,0	4,5	2,5	10,0	5,30	40	**PHG T10-2340-...**
	236	2 360,0	4,5	2,5	10,0	5,30	40	**PHG T10-2360-...**
	238	2 380,0	4,5	2,5	10,0	5,30	40	**PHG T10-2380-...**
	243	2 430,0	4,5	2,5	10,0	5,30	40	**PHG T10-2430-...**
	248	2 480,0	4,5	2,5	10,0	5,30	40	**PHG T10-2480-...**
	250	2 500,0	4,5	2,5	10,0	5,30	40	**PHG T10-2500-...**
	254	2 540,0	4,5	2,5	10,0	5,30	40	**PHG T10-2540-...**
	259	2 590,0	4,5	2,5	10,0	5,30	40	**PHG T10-2590-...**
	260	2 600,0	4,5	2,5	10,0	5,30	40	**PHG T10-2600-...**
	261	2 610,0	4,5	2,5	10,0	5,30	40	**PHG T10-2610-...**
	265	2 650,0	4,5	2,5	10,0	5,30	40	**PHG T10-2650-...**
	270	2 700,0	4,5	2,5	10,0	5,30	40	**PHG T10-2700-...**
	280	2 800,0	4,5	2,5	10,0	5,30	40	**PHG T10-2800-...**
	288	2 880,0	4,5	2,5	10,0	5,30	40	**PHG T10-2880-...**
	300	3 000,0	4,5	2,5	10,0	5,30	40	**PHG T10-3000-...**
	304	3 040,0	4,5	2,5	10,0	5,30	40	**PHG T10-3040-...**
	310	3 100,0	4,5	2,5	10,0	5,30	40	**PHG T10-3100-...**
	323	3 230,0	4,5	2,5	10,0	5,30	40	**PHG T10-3230-...**
	330	3 300,0	4,5	2,5	10,0	5,30	40	**PHG T10-3300-...**
	334	3 340,0	4,5	2,5	10,0	5,30	40	**PHG T10-3340-...**
	350	3 500,0	4,5	2,5	10,0	5,30	40	**PHG T10-3500-...**
	360	3 600,0	4,5	2,5	10,0	5,30	40	**PHG T10-3600-...**
	368	3 680,0	4,5	2,5	10,0	5,30	40	**PHG T10-3680-...**
	387	3 870,0	4,5	2,5	10,0	5,30	40	**PHG T10-3870-...**
	404	4 040,0	4,5	2,5	10,0	5,30	40	**PHG T10-4040-...**
	428	4 280,0	4,5	2,5	10,0	5,30	40	**PHG T10-4280-...**
	468	4 680,0	4,5	2,5	10,0	5,30	40	**PHG T10-4680-...**
	506	5 060,0	4,5	2,5	10,0	5,30	40	**PHG T10-5060-...**
	536	5 360,0	4,5	2,5	10,0	5,30	40	**PHG T10-5360-...**
	567	5 670,0	4,5	2,5	10,0	5,30	40	**PHG T10-5670-...**
	600	6 000,0	4,5	2,5	10,0	5,30	40	**PHG T10-6000-...**
	629	6 290,0	4,5	2,5	10,0	5,30	40	**PHG T10-6290-...**
	700	7 000,0	4,5	2,5	10,0	5,30	40	**PHG T10-7000-...**
	705	7 050,0	4,5	2,5	10,0	5,30	40	**PHG T10-7050-...**
T20	44	880,0	8,0	5,0	20,0	10,15	40	**PHG T20-880-...**
	59	1 180,0	8,0	5,0	20,0	10,15	40	**PHG T20-1180-...**
	61	1 220,0	8,0	5,0	20,0	10,15	40	**PHG T20-1220-...**
	62	1 240,0	8,0	5,0	20,0	10,15	40	**PHG T20-1240-...**
	63	1 260,0	8,0	5,0	20,0	10,15	40	**PHG T20-1260-...**
	64	1 280,0	8,0	5,0	20,0	10,15	40	**PHG T20-1280-...**
	73	1 460,0	8,0	5,0	20,0	10,15	40	**PHG T20-1460-...**
	80	1 600,0	8,0	5,0	20,0	10,15	40	**PHG T20-1600-...**
	84	1 680,0	8,0	5,0	20,0	10,15	40	**PHG T20-1680-...**
	85	1 700,0	8,0	5,0	20,0	10,15	40	**PHG T20-1700-...**
	89	1 780,0	8,0	5,0	20,0	10,15	40	**PHG T20-1780-...**
	94	1 880,0	8,0	5,0	20,0	10,15	40	**PHG T20-1880-...**

Section	Number of teeth	Dimensions Pitch length	h_1	h_2	p	A	α	Designation
–	–	mm					°	–
T20	102	2 040,0	8,0	5,0	20,0	10,15	40	**PHG T20-2040-...**
	110	2 200,0	8,0	5,0	20,0	10,15	40	**PHG T20-2200-...**
	112	2 240,0	8,0	5,0	20,0	10,15	40	**PHG T20-2240-...**
	130	2 600,0	8,0	5,0	20,0	10,15	40	**PHG T20-2600-...**
	136	2 720,0	8,0	5,0	20,0	10,15	40	**PHG T20-2720-...**
	137	2 740,0	8,0	5,0	20,0	10,15	40	**PHG T20-2740-...**
	138	2 760,0	8,0	5,0	20,0	10,15	40	**PHG T20-2760-...**
	155	3 100,0	8,0	5,0	20,0	10,15	40	**PHG T20-3100-...**
	181	3 620,0	8,0	5,0	20,0	10,15	40	**PHG T20-3620-...**
	238	4 760,0	8,0	5,0	20,0	10,15	40	**PHG T20-4760-...**
	250	5 000,0	8,0	5,0	20,0	10,15	40	**PHG T20-5000-...**
AT5	44	220,0	2,7	1,2	5,0	3,62	50	**PHG AT5-220-...**
	60	300,0	2,7	1,2	5,0	3,62	50	**PHG AT5-300-...**
	61	305,0	2,7	1,2	5,0	3,62	50	**PHG AT5-305-...**
	68	340,0	2,7	1,2	5,0	3,62	50	**PHG AT5-340-...**
	78	390,0	2,7	1,2	5,0	3,62	50	**PHG AT5-390-...**
	84	420,0	2,7	1,2	5,0	3,62	50	**PHG AT5-420-...**
	91	455,0	2,7	1,2	5,0	3,62	50	**PHG AT5-455-...**
	109	545,0	2,7	1,2	5,0	3,62	50	**PHG AT5-545-...**
	120	600,0	2,7	1,2	5,0	3,62	50	**PHG AT5-600-...**
	126	630,0	2,7	1,2	5,0	3,62	50	**PHG AT5-630-...**
	132	660,0	2,7	1,2	5,0	3,62	50	**PHG AT5-660-...**
	138	690,0	2,7	1,2	5,0	3,62	50	**PHG AT5-690-...**
	150	750,0	2,7	1,2	5,0	3,62	50	**PHG AT5-750-...**
	165	825,0	2,7	1,2	5,0	3,62	50	**PHG AT5-825-...**
	195	975,0	2,7	1,2	5,0	3,62	50	**PHG AT5-975-...**
	225	1 125,0	2,7	1,2	5,0	3,62	50	**PHG AT5-1125-...**
	304	1 520,0	2,7	1,2	5,0	3,62	50	**PHG AT5-1520-...**
AT10	50	500,0	5,0	2,5	10,0	7,30	50	**PHG AT10-500-...**
	56	560,0	5,0	2,5	10,0	7,30	50	**PHG AT10-560-...**
	58	580,0	5,0	2,5	10,0	7,30	50	**PHG AT10-580-...**
	66	660,0	5,0	2,5	10,0	7,30	50	**PHG AT10-660-...**
	73	730,0	5,0	2,5	10,0	7,30	50	**PHG AT10-730-...**
	84	840,0	5,0	2,5	10,0	7,30	50	**PHG AT10-840-...**
	92	920,0	5,0	2,5	10,0	7,30	50	**PHG AT10-920-...**
	96	960,0	5,0	2,5	10,0	7,30	50	**PHG AT10-960-...**
	101	1 010,0	5,0	2,5	10,0	7,30	50	**PHG AT10-1010-...**
	115	1 150,0	5,0	2,5	10,0	7,30	50	**PHG AT10-1150-...**
	121	1 210,0	5,0	2,5	10,0	7,30	50	**PHG AT10-1210-...**
	124	1 240,0	5,0	2,5	10,0	7,30	50	**PHG AT10-1240-...**
	125	1 250,0	5,0	2,5	10,0	7,30	50	**PHG AT10-1250-...**
	128	1 280,0	5,0	2,5	10,0	7,30	50	**PHG AT10-1280-...**
	132	1 320,0	5,0	2,5	10,0	7,30	50	**PHG AT10-1320-...**
	150	1 500,0	5,0	2,5	10,0	7,30	50	**PHG AT10-1500-...**
	161	1 610,0	5,0	2,5	10,0	7,30	50	**PHG AT10-1610-...**
	180	1 800,0	5,0	2,5	10,0	7,30	50	**PHG AT10-1800-...**
	194	1 940,0	5,0	2,5	10,0	7,30	50	**PHG AT10-1940-...**
	200	2 000,0	5,0	2,5	10,0	7,30	50	**PHG AT10-2000-...**
	225	2 250,0	5,0	2,5	10,0	7,30	50	**PHG AT10-2250-...**
	240	2 400,0	5,0	2,5	10,0	7,30	50	**PHG AT10-2400-...**
	259	2 590,0	5,0	2,5	10,0	7,30	50	**PHG AT10-2590-...**
	288	2 880,0	5,0	2,5	10,0	7,30	50	**PHG AT10-2880-...**
	308	3 080,0	5,0	2,5	10,0	7,30	50	**PHG AT10-3080-...**
	315	3 150,0	5,0	2,5	10,0	7,30	50	**PHG AT10-3150-...**
	334	3 340,0	5,0	2,5	10,0	7,30	50	**PHG AT10-3340-...**
	403	4 030,0	5,0	2,5	10,0	7,30	50	**PHG AT10-4030-...**
AT20	50	1 000,0	8,0	5,0	20,0	12,70	50	**PHG AT20-1000-...**
	55	1 100,0	8,0	5,0	20,0	12,70	50	**PHG AT20-1100-...**
	85	1 700,0	8,0	5,0	20,0	12,70	50	**PHG AT20-1700-...**
	95	1 900,0	8,0	5,0	20,0	12,70	50	**PHG AT20-1900-...**
	118	2 360,0	8,0	5,0	20,0	12,70	50	**PHG AT20-2360-...**

Non-standard lengths may also be available.
To complete designation add belt width in mm.
Full sleeves are available in various widths. Please contact your SKF Authorized Distributor.

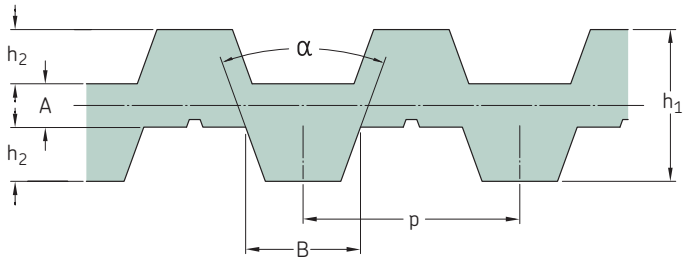

Section	Number of teeth per side	Dimensions Pitch length	h_2	A	B	p	h_1	α	Designation
–	–	mm						°	–
D-T5	100	500	1,20	1,0	2,65	5,0	3,40	40	**PHG DB-T5-500-...**
	101	505	1,20	1,0	2,65	5,0	3,40	40	**PHG DB-T5-505-...**
	102	510	1,20	1,0	2,65	5,0	3,40	40	**PHG DB-T5-510-...**
	105	525	1,20	1,0	2,65	5,0	3,40	40	**PHG DB-T5-525-...**
	108	540	1,20	1,0	2,65	5,0	3,40	40	**PHG DB-T5-540-...**
	109	545	1,20	1,0	2,65	5,0	3,40	40	**PHG DB-T5-545-...**
	110	550	1,20	1,0	2,65	5,0	3,40	40	**PHG DB-T5-550-...**
	112	560	1,20	1,0	2,65	5,0	3,40	40	**PHG DB-T5-560-...**
	114	570	1,20	1,0	2,65	5,0	3,40	40	**PHG DB-T5-570-...**
	115	575	1,20	1,0	2,65	5,0	3,40	40	**PHG DB-T5-575-...**
	116	580	1,20	1,0	2,65	5,0	3,40	40	**PHG DB-T5-580-...**
	117	585	1,20	1,0	2,65	5,0	3,40	40	**PHG DB-T5-585-...**
	120	600	1,20	1,0	2,65	5,0	3,40	40	**PHG DB-T5-600-...**
	122	610	1,20	1,0	2,65	5,0	3,40	40	**PHG DB-T5-610-...**
	124	620	1,20	1,0	2,65	5,0	3,40	40	**PHG DB-T5-620-...**
	126	630	1,20	1,0	2,65	5,0	3,40	40	**PHG DB-T5-630-...**
	127	635	1,20	1,0	2,65	5,0	3,40	40	**PHG DB-T5-635-...**
	130	650	1,20	1,0	2,65	5,0	3,40	40	**PHG DB-T5-650-...**
	133	665	1,20	1,0	2,65	5,0	3,40	40	**PHG DB-T5-665-...**
	135	675	1,20	1,0	2,65	5,0	3,40	40	**PHG DB-T5-675-...**
	137	685	1,20	1,0	2,65	5,0	3,40	40	**PHG DB-T5-685-...**
	138	690	1,20	1,0	2,65	5,0	3,40	40	**PHG DB-T5-690-...**
	140	700	1,20	1,0	2,65	5,0	3,40	40	**PHG DB-T5-700-...**
	142	710	1,20	1,0	2,65	5,0	3,40	40	**PHG DB-T5-710-...**
	144	720	1,20	1,0	2,65	5,0	3,40	40	**PHG DB-T5-720-...**
	145	725	1,20	1,0	2,65	5,0	3,40	40	**PHG DB-T5-725-...**
	148	740	1,20	1,0	2,65	5,0	3,40	40	**PHG DB-T5-740-...**
	150	750	1,20	1,0	2,65	5,0	3,40	40	**PHG DB-T5-750-...**
	156	780	1,20	1,0	2,65	5,0	3,40	40	**PHG DB-T5-780-...**
	158	790	1,20	1,0	2,65	5,0	3,40	40	**PHG DB-T5-790-...**
	160	800	1,20	1,0	2,65	5,0	3,40	40	**PHG DB-T5-800-...**
	161	805	1,20	1,0	2,65	5,0	3,40	40	**PHG DB-T5-805-...**
	162	810	1,20	1,0	2,65	5,0	3,40	40	**PHG DB-T5-810-...**
	163	815	1,20	1,0	2,65	5,0	3,40	40	**PHG DB-T5-815-...**
	168	840	1,20	1,0	2,65	5,0	3,40	40	**PHG DB-T5-840-...**
	170	850	1,20	1,0	2,65	5,0	3,40	40	**PHG DB-T5-850-...**
	172	860	1,20	1,0	2,65	5,0	3,40	40	**PHG DB-T5-860-...**
	180	900	1,20	1,0	2,65	5,0	3,40	40	**PHG DB-T5-900-...**
	188	940	1,20	1,0	2,65	5,0	3,40	40	**PHG DB-T5-940-...**
	198	990	1,20	1,0	2,65	5,0	3,40	40	**PHG DB-T5-990-...**
	199	995	1,20	1,0	2,65	5,0	3,40	40	**PHG DB-T5-995-...**
	200	1 000	1,20	1,0	2,65	5,0	3,40	40	**PHG DB-T5-1000-...**
	204	1 020	1,20	1,0	2,65	5,0	3,40	40	**PHG DB-T5-1020-...**
	206	1 030	1,20	1,0	2,65	5,0	3,40	40	**PHG DB-T5-1030-...**
	209	1 045	1,20	1,0	2,65	5,0	3,40	40	**PHG DB-T5-1045-...**
	210	1 050	1,20	1,0	2,65	5,0	3,40	40	**PHG DB-T5-1050-...**
	212	1 060	1,20	1,0	2,65	5,0	3,40	40	**PHG DB-T5-1060-...**
	215	1 075	1,20	1,0	2,65	5,0	3,40	40	**PHG DB-T5-1075-...**
	220	1 100	1,20	1,0	2,65	5,0	3,40	40	**PHG DB-T5-1100-...**
	224	1 120	1,20	1,0	2,65	5,0	3,40	40	**PHG DB-T5-1120-...**
	228	1 140	1,20	1,0	2,65	5,0	3,40	40	**PHG DB-T5-1140-...**
	240	1 200	1,20	1,0	2,65	5,0	3,40	40	**PHG DB-T5-1200-...**
	243	1 215	1,20	1,0	2,65	5,0	3,40	40	**PHG DB-T5-1215-...**
	252	1 260	1,20	1,0	2,65	5,0	3,40	40	**PHG DB-T5-1260-...**
	254	1 270	1,20	1,0	2,65	5,0	3,40	40	**PHG DB-T5-1270-...**

Non-standard lengths may also be available.
To complete designation add belt width in mm.
Double-sided metric belts are available in symmetric (DA) and asymmetric (DB) tooth profiles. Symmetric will be supplied unless otherwise specified.
Full sleeves are available in various widths. Please contact your SKF Authorized Distributor.

Section	Number of teeth per side	Dimensions Pitch length	h_2	A	B	p	h_1	α	Designation
–	–	mm						°	–
D-T5	255	1 275	1,20	1,0	2,65	5,0	3,40	40	**PHG DB-T5-1275-...**
	260	1 300	1,20	1,0	2,65	5,0	3,40	40	**PHG DB-T5-1300-...**
	265	1 325	1,20	1,0	2,65	5,0	3,40	40	**PHG DB-T5-1325-...**
	276	1 380	1,20	1,0	2,65	5,0	3,40	40	**PHG DB-T5-1380-...**
	278	1 390	1,20	1,0	2,65	5,0	3,40	40	**PHG DB-T5-1390-...**
	283	1 415	1,20	1,0	2,65	5,0	3,40	40	**PHG DB-T5-1415-...**
D-T10	90	900	2,50	2,0	5,30	10,0	7,00	40	**PHG DB-T10-900-...**
	91	910	2,50	2,0	5,30	10,0	7,00	40	**PHG DB-T10-910-...**
	92	920	2,50	2,0	5,30	10,0	7,00	40	**PHG DB-T10-920-...**
	95	950	2,50	2,0	5,30	10,0	7,00	40	**PHG DB-T10-950-...**
	95	950	2,50	2,0	5,30	10,0	7,00	40	**PHG DB-T10-950-...**
	96	960	2,50	2,0	5,30	10,0	7,00	40	**PHG DB-T10-960-...**
	97	970	2,50	2,0	5,30	10,0	7,00	40	**PHG DB-T10-970-...**
	98	980	2,50	2,0	5,30	10,0	7,00	40	**PHG DB-T10-980-...**
	100	1 000	2,50	2,0	5,30	10,0	7,00	40	**PHG DB-T10-1000-...**
	101	1 010	2,50	2,0	5,30	10,0	7,00	40	**PHG DB-T10-1010-...**
	103	1 030	2,50	2,0	5,30	10,0	7,00	40	**PHG DB-T10-1030-...**
	104	1 040	2,50	2,0	5,30	10,0	7,00	40	**PHG DB-T10-1040-...**
	105	1 050	2,50	2,0	5,30	10,0	7,00	40	**PHG DB-T10-1050-...**
	108	1 080	2,50	2,0	5,30	10,0	7,00	40	**PHG DB-T10-1080-...**
	110	1 100	2,50	2,0	5,30	10,0	7,00	40	**PHG DB-T10-1100-...**
	111	1 110	2,50	2,0	5,30	10,0	7,00	40	**PHG DB-T10-1110-...**
	114	1 140	2,50	2,0	5,30	10,0	7,00	40	**PHG DB-T10-1140-...**
	115	1 150	2,50	2,0	5,30	10,0	7,00	40	**PHG DB-T10-1150-...**
	120	1 200	2,50	2,0	5,30	10,0	7,00	40	**PHG DB-T10-1200-...**
	121	1 210	2,50	2,0	5,30	10,0	7,00	40	**PHG DB-T10-1210-...**
	124	1 240	2,50	2,0	5,30	10,0	7,00	40	**PHG DB-T10-1240-...**
	125	1 250	2,50	2,0	5,30	10,0	7,00	40	**PHG DB-T10-1250-...**
	126	1 260	2,50	2,0	5,30	10,0	7,00	40	**PHG DB-T10-1260-...**
	128	1 280	2,50	2,0	5,30	10,0	7,00	40	**PHG DB-T10-1280-...**
	130	1 300	2,50	2,0	5,30	10,0	7,00	40	**PHG DB-T10-1300-...**
	132	1 320	2,50	2,0	5,30	10,0	7,00	40	**PHG DB-T10-1320-...**
	135	1 350	2,50	2,0	5,30	10,0	7,00	40	**PHG DB-T10-1350-...**
	139	1 390	2,50	2,0	5,30	10,0	7,00	40	**PHG DB-T10-1390-...**
	140	1 400	2,50	2,0	5,30	10,0	7,00	40	**PHG DB-T10-1400-...**
	142	1 420	2,50	2,0	5,30	10,0	7,00	40	**PHG DB-T10-1420-...**
	144	1 440	2,50	2,0	5,30	10,0	7,00	40	**PHG DB-T10-1440-...**
	145	1 450	2,50	2,0	5,30	10,0	7,00	40	**PHG DB-T10-1450-...**
	146	1 460	2,50	2,0	5,30	10,0	7,00	40	**PHG DB-T10-1460-...**
	148	1 480	2,50	2,0	5,30	10,0	7,00	40	**PHG DB-T10-1480-...**
	150	1 500	2,50	2,0	5,30	10,0	7,00	40	**PHG DB-T10-1500-...**
	152	1 520	2,50	2,0	5,30	10,0	7,00	40	**PHG DB-T10-1520-...**
	156	1 560	2,50	2,0	5,30	10,0	7,00	40	**PHG DB-T10-1560-...**
	160	1 600	2,50	2,0	5,30	10,0	7,00	40	**PHG DB-T10-1600-...**
	161	1 610	2,50	2,0	5,30	10,0	7,00	40	**PHG DB-T10-1610-...**
	164	1 640	2,50	2,0	5,30	10,0	7,00	40	**PHG DB-T10-1640-...**
	164	1 640	2,50	2,0	5,30	10,0	7,00	40	**PHG DB-T10-1640-...**
	169	1 690	2,50	2,0	5,30	10,0	7,00	40	**PHG DB-T10-1690-...**
	170	1 700	2,50	2,0	5,30	10,0	7,00	40	**PHG DB-T10-1700-...**
	175	1 750	2,50	2,0	5,30	10,0	7,00	40	**PHG DB-T10-1750-...**
	178	1 780	2,50	2,0	5,30	10,0	7,00	40	**PHG DB-T10-1780-...**
	180	1 800	2,50	2,0	5,30	10,0	7,00	40	**PHG DB-T10-1800-...**
	186	1 860	2,50	2,0	5,30	10,0	7,00	40	**PHG DB-T10-1860-...**
	188	1 880	2,50	2,0	5,30	10,0	7,00	40	**PHG DB-T10-1880-...**
	196	1 960	2,50	2,0	5,30	10,0	7,00	40	**PHG DB-T10-1960-...**
	198	1 980	2,50	2,0	5,30	10,0	7,00	40	**PHG DB-T10-1980-...**
	202	2 020	2,50	2,0	5,30	10,0	7,00	40	**PHG DB-T10-2020-...**
	208	2 080	2,50	2,0	5,30	10,0	7,00	40	**PHG DB-T10-2080-...**
	209	2 090	2,50	2,0	5,30	10,0	7,00	40	**PHG DB-T10-2090-...**
	210	2 100	2,50	2,0	5,30	10,0	7,00	40	**PHG DB-T10-2100-...**
	220	2 200	2,50	2,0	5,30	10,0	7,00	40	**PHG DB-T10-2200-...**
	225	2 250	2,50	2,0	5,30	10,0	7,00	40	**PHG DB-T10-2250-...**
	227	2 270	2,50	2,0	5,30	10,0	7,00	40	**PHG DB-T10-2270-...**
	230	2 300	2,50	2,0	5,30	10,0	7,00	40	**PHG DB-T10-2300-...**
	234	2 340	2,50	2,0	5,30	10,0	7,00	40	**PHG DB-T10-2340-...**
	236	2 360	2,50	2,0	5,30	10,0	7,00	40	**PHG DB-T10-2360-...**
	238	2 380	2,50	2,0	5,30	10,0	7,00	40	**PHG DB-T10-2380-...**
	243	2 430	2,50	2,0	5,30	10,0	7,00	40	**PHG DB-T10-2430-...**
	248	2 480	2,50	2,0	5,30	10,0	7,00	40	**PHG DB-T10-2480-...**
	250	2 500	2,50	2,0	5,30	10,0	7,00	40	**PHG DB-T10-2500-...**
	254	2 540	2,50	2,0	5,30	10,0	7,00	40	**PHG DB-T10-2540-...**
	259	2 590	2,50	2,0	5,30	10,0	7,00	40	**PHG DB-T10-2590-...**
	260	2 600	2,50	2,0	5,30	10,0	7,00	40	**PHG DB-T10-2600-...**
	261	2 610	2,50	2,0	5,30	10,0	7,00	40	**PHG DB-T10-2610-...**
	265	2 650	2,50	2,0	5,30	10,0	7,00	40	**PHG DB-T10-2650-...**
	280	2 800	2,50	2,0	5,30	10,0	7,00	40	**PHG DB-T10-2800-...**

Non-standard lengths may also be available.
To complete designation add belt width in mm.
Double-sided metric belts are available in symmetric (DA) and asymmetric (DB) tooth profiles. Symmetric will be supplied unless otherwise specified.
Full sleeves are available in various widths. Please contact your SKF Authorized Distributor.

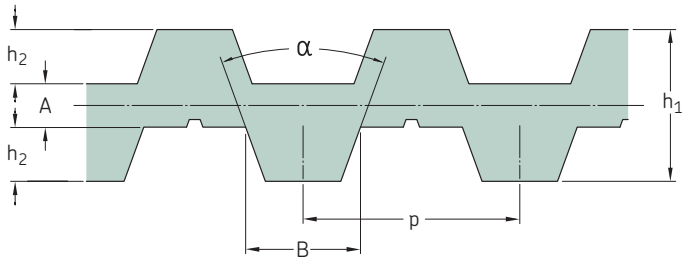

Section	Number of teeth per side	Dimensions Pitch length	h_2	A	B	p	h_1	α	Designation
–	–	mm						°	–
D-T10	288	2 880	2,50	2,0	5,30	10,0	7,00	40	**PHG DB-T10-2880-...**
	300	3 000	2,50	2,0	5,30	10,0	7,00	40	**PHG DB-T10-3000-...**
D-T20	85	1 700	5,00	3,0	10,15	20,0	13,00	40	**PHG DB-T20-1700-...**
	89	1 780	5,00	3,0	10,15	20,0	13,00	40	**PHG DB-T20-1780-...**
	94	1 880	5,00	3,0	10,15	20,0	13,00	40	**PHG DB-T20-1880-...**
	102	2 040	5,00	3,0	10,15	20,0	13,00	40	**PHG DB-T20-2040-...**
	110	2 200	5,00	3,0	10,15	20,0	13,00	40	**PHG DB-T20-2200-...**
	112	2 240	5,00	3,0	10,15	20,0	13,00	40	**PHG DB-T20-2240-...**
	130	2 600	5,00	3,0	10,15	20,0	13,00	40	**PHG DB-T20-2600-...**
	136	2 720	5,00	3,0	10,15	20,0	13,00	40	**PHG DB-T20-2720-...**
	137	2 740	5,00	3,0	10,15	20,0	13,00	40	**PHG DB-T20-2740-...**
	138	2 760	5,00	3,0	10,15	20,0	13,00	40	**PHG DB-T20-2760-...**
	155	3 100	5,00	3,0	10,15	20,0	13,00	40	**PHG DB-T20-3100-...**
	181	3 620	5,00	3,0	10,15	20,0	13,00	40	**PHG DB-T20-3620-...**
	238	4 760	5,00	3,0	10,15	20,0	13,00	40	**PHG DB-T20-4760-...**
	250	5 000	5,00	3,0	10,15	20,0	13,00	40	**PHG DB-T20-5000-...**

Non-standard lengths may also be available.
To complete designation add belt width in mm.
Double-sided metric belts are available in symmetric (DA) and asymmetric (DB) tooth profiles. Symmetric will be supplied unless otherwise specified.
Full sleeves are available in various widths. Please contact your SKF Authorized Distributor.

Page intentionally left blank

SKF

Chains

Roller chains 76

Roller chain attachments A-1, K-1. . 78

Roller chain attachments SA-1/M1, SK-1/M1. 79

Roller chain attachments WA-1, WA-2, WK-1, WK-2 80

Roller chain attachments WSA-1, WSA-2, WSK-1, WSK-2 81

SKF Xtra Strength Chains. 82

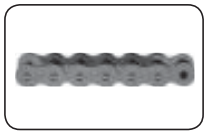
SKF Xtra Corrosion Resistant Chains 84

Roller chains Side bow, SKF Xtra Performance SLR Chains 85

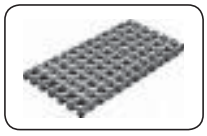
Oil field chains 86

Straight side plate chains. 87

Double pitch chains 88

Double pitch chains Transmission attachments. 89

Conveyor chains C series 90

Conveyor chain C series ┤ttachments. 91

Conveyor chains M series. 93

Conveyor chains Lumber mill series, 3939 series 94

Silent chains 95

Leaf chains. 96

SKF Chains

SKF chain range nomenclature has a defined prefix of PHC. All standardized chains we produce conform to conventional basic part number format – ISO, BS, or DIN.

Roller Chains

The Roller chains designation format is constant through the range, with the following example to indicate set up.

SKF Designation prefix PHC 80 - 1 C X10FT

Chain type
ANSI – 25 -240
BS – 05B- 72B

No of strands
Simplex– single (-1), Duplex - double (-2)
Triplex – triple (-3)

Supplementary
Many different supplementary designations, examples
C- cottered type
SS – stainless steel
C/L – connector link

Note
See SKF product training for full supplementary notations

Chain length
Standard box – 10FT or 5MTR
Non standard example – 164LINKS

SKF Chains

SKF chain range nomenclature has a defined prefix of PHC. All standardized chains we produce conform to conventional basic part number format – ISO, BS, or DIN.

Special chains – Leaf, Conveyor

The special and conveyor chains designation format is constant through the range, but there are very many combinations of materials, attachments and special considerations, the following is an example to indicate set up.

SKF Designation prefix

PHC C2080H - L1A2 X10FT

Chain type
Leaf – BL, AL, FL, LL
Conveyor – C, M, FV, Z – variations based on hollow shafts, rollers and side plates heights
*note more chain types available. Check catalogue

Supplementary
Many different supplementary designations, examples
C – cottered type
SS – stainless steel
C/L – connector link

Note
See SKF product training for full supplementary notations

Chain length
Standard length – 10FT or 5MTR
Non standard example – 164LINKS

Chains (PHC Product Group)

SKF chains completely conform to international standards (ISO) and other advanced industrial standards (i.e. ANSI and DIN) as shown below:

- Short pitch transmission precision roller chains are manufactured according to ISO 606- 1994, ASME B29.1M-1993 and DIN 8187/DIN 8188
- Double pitch precision roller chains for transmission and conveyors are manufactured according to ISO 1275-1995, ASME B29.3M-1994/AMSE B29.4M-1994 and DIN 8181-2000
- Short pitch transmission precision bush chains are manufactured according to ISO 1395-1997, ASME B29.12M-1997 and DIN 8154/DIN 8164
- Steel roller chains/attachments (types S and C) are manufactured according to ISO 487-1998, ASME B29.19M-1996 and DIN 8169-1997
- Conveyor chains/attachments are manufactured according to ISO 1977-2000, ASME B29.15M-1997 and DIN 8165/DIN 8166/DIN 8167
- Heavy duty cranked link transmission chains are manufactured according to ISO 3512, ASME B29.10M-1997 and DIN 8182
- Leaf chains are manufactured according to ISO 4347-1992, ASME B29.8M-1983 and DIN 8152
- Welded steel type cranked link drag chains are manufactured according to ISO 6971-2002 and ASME B29.200-2001
- Welded steel type cranked link mill chains are manufactured according to ISO 6972-2002 and ASME B29.200-2001
- Silent chains are manufactured according to ASME B29.2M-1982 and DIN 8190
- Open barrel steel pintle type conveyor chains/attachments are manufactured according to ASME B29.25M-1994
- Oil field chains are manufactured according to API SPEC 7F-1993
- Hollow pin chains are manufactured according to ASME B29.27M-2001 and DIN 8168

Depending and the type and style, SKF conveyor chains comply with international standards such as DIN 8187, ISO 1977 and BS 4116 (Part IV).
Other cast and steel chains comply with the relevant industry accepted standards for performance and dimensions.

Main materials used in the chain construction

Side Plate	45Mn, 40Cr, 35CrMo, Premium carbon steel no. 45
Roller	Premium carbon steel no. 10, Premium carbon steel no. 45
Bush	20Mn Premium carbon steel no. 20
Pin	35CrMo, GCr15, 30CrMnTi, 40Cr, 20CrMnMo

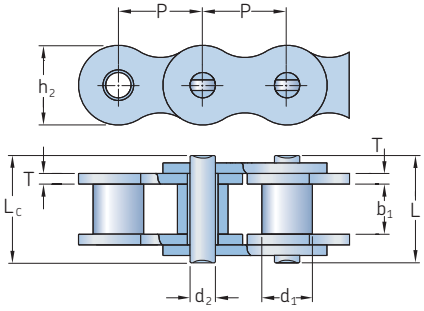

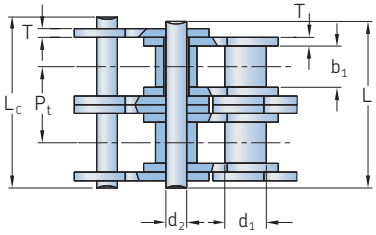

ANSI Chain number	BS/ISO Chain number	Dimensions Pitch P	Roller diameter d_1 Max.	Width between inner plates b_1 Min.	Pin diameter d_2 Max.	Pin length L Max.	L_c Max.	Pin length cottered L_c Max.	Inner plate height h_2 Max.	Plate thickness T Max.	Transverse pitch P_t	Ultimate tensile strength Q Min.	Average tensile strength Q_0	Mass per meter	Designation
–	–	mm										kN		kg/m	–
15-1*	**03C***	4,76	2,48	2,38	1,62	6,10	6,90	–	4,30	0,60	–	1,8	2,0	0,08	**PHC 15-1...**
25-1*	**04C-1***	6,35	3,30	3,18	2,31	7,90	8,40	–	6,00	0,80	–	3,5	4,6	0,15	**PHC 25-1...**
35-1*	**06C-1***	9,53	5,08	4,77	3,58	12,40	13,17	–	9,00	1,30	–	7,9	10,8	0,33	**PHC 35-1...**
41-1	**085-1**	12,70	7,77	6,25	3,58	13,75	15,00	–	9,91	1,30	–	6,7	12,6	0,41	**PHC 41-1...**
40-1	**08A-1**	12,70	7,95	7,85	3,96	16,60	17,80	–	12,00	1,50	–	14,1	17,5	0,62	**PHC 40-1...**
50-1	**10A-1**	15,88	10,16	9,40	5,08	20,70	22,20	23,3	15,09	2,03	–	22,2	29,4	1,02	**PHC 50-1...**
60-1	**12A-1**	19,05	11,91	12,57	5,94	25,90	27,70	28,3	18,00	2,42	–	31,8	41,5	1,50	**PHC 60-1...**
80-1	**16A-1**	25,40	15,88	15,75	7,92	32,70	35,00	36,5	24,00	3,25	–	56,7	69,4	2,60	**PHC 80-1...**
100-1	**20A-1**	31,75	19,05	18,90	9,53	40,40	44,70	44,7	30,00	4,00	–	88,5	109,2	3,91	**PHC 100-1...**
120-1	**24A-1**	38,10	22,23	25,22	11,10	50,30	54,30	54,3	35,70	4,80	–	127,0	156,3	5,62	**PHC 120-1...**
140-1	**28A-1**	44,45	25,40	25,22	12,70	54,40	59,00	59,0	41,00	5,60	–	172,4	212,0	7,50	**PHC 140-1...**
160-1	**32A-1**	50,80	28,58	31,55	14,27	64,80	69,60	69,6	47,80	6,40	–	226,8	278,9	10,10	**PHC 160-1...**
180-1	**36A-1**	57,15	35,71	35,48	17,46	72,80	78,60	78,6	53,60	7,20	–	280,2	341,8	13,45	**PHC 180-1...**
200-1	**40A-1**	63,50	39,68	37,85	19,85	80,30	87,20	87,2	60,00	8,00	–	353,8	431,6	16,15	**PHC 200-1...**
240-1	**48A-1**	76,20	47,63	47,35	23,81	95,50	103,00	103,0	72,39	9,50	–	510,3	622,5	23,20	**PHC 240-1...**
25-2*	**04C-2***	6,35	3,30	3,18	2,31	14,50	15,00	–	6,00	0,80	6,40	7,0	8,6	0,28	**PHC 25-2...**
35-2*	**06C-2***	9,53	5,08	4,77	3,58	22,50	23,30	–	9,00	1,30	10,13	15,8	19,7	0,63	**PHC 35-2...**
41-2	**085-2**	12,70	7,77	6,25	3,58	25,70	26,90	–	9,91	1,30	11,95	13,3	16,9	0,81	**PHC 41-2...**
40-2	**08A-2**	12,70	7,95	7,85	3,96	31,00	32,20	–	12,00	1,50	14,38	28,2	35,9	1,12	**PHC 40-2...**
50-2	**10A-2**	15,88	10,16	9,40	5,08	38,90	40,40	41,2	15,09	2,03	18,11	44,4	58,1	2,00	**PHC 50-2...**
60-2	**12A-2**	19,05	11,91	12,57	5,94	48,80	50,50	51,1	18,00	2,42	22,78	63,6	82,1	2,92	**PHC 60-2...**
80-2	**16A-2**	25,40	15,88	15,75	7,92	62,70	64,30	65,8	24,00	3,25	29,29	113,4	141,8	5,15	**PHC 80-2...**
100-2	**20A-2**	31,75	19,05	18,90	9,53	76,40	80,50	80,5	30,00	4,00	35,76	177,0	219,4	7,80	**PHC 100-2...**
120-2	**24A-2**	38,10	22,23	25,22	11,10	95,80	99,70	99,7	35,70	4,80	45,44	254,0	314,9	11,70	**PHC 120-2...**
140-2	**28A-2**	44,45	25,40	25,22	12,70	103,30	107,90	107,9	41,00	5,60	48,87	344,8	427,5	15,14	**PHC 140-2...**
160-2	**32A-2**	50,80	28,58	31,55	14,27	123,30	128,10	128,1	47,80	6,40	58,55	453,6	562,4	20,14	**PHC 160-2...**
180-2	**36A-2**	57,15	35,71	35,48	17,46	138,60	144,40	144,4	53,60	7,20	65,84	560,5	695,0	29,22	**PHC 180-2...**
200-2	**40A-2**	63,50	39,68	37,85	19,85	151,90	158,80	158,8	60,00	8,00	71,55	707,6	877,4	32,24	**PHC 200-2...**
240-2	**48A-2**	76,20	47,63	47,35	23,81	183,40	190,80	190,8	72,39	9,50	87,83	1 020,6	1 255,3	45,23	**PHC 240-2...**
25-3*	**04C-3***	6,35	3,30	3,18	2,31	21,00	21,50	–	6,00	0,80	6,40	10,5	12,6	0,44	**PHC 25-3...**
35-3*	**06C-3***	9,53	5,08	4,77	3,58	32,70	33,50	–	9,00	1,30	10,13	23,7	28,6	1,05	**PHC 35-3...**
40-3	**08A-3**	12,70	7,95	7,85	3,96	45,40	46,60	–	12,00	1,50	14,38	42,3	50,0	1,90	**PHC 40-3...**
50-3	**10A-3**	15,88	10,16	9,40	5,08	57,00	58,50	59,3	15,09	2,03	18,11	66,6	77,8	3,09	**PHC 50-3...**
60-3	**12A-3**	19,05	11,91	12,57	5,94	71,50	73,30	73,9	18,00	2,42	22,78	95,4	111,1	4,54	**PHC 60-3...**
80-3	**16A-3**	25,40	15,88	15,75	7,92	91,70	93,60	95,1	24,00	3,25	29,29	170,1	198,4	7,89	**PHC 80-3...**
100-3	**20A-3**	31,75	19,05	18,90	9,53	112,20	116,30	116,3	30,00	4,00	35,76	265,5	309,6	11,77	**PHC 100-3...**
120-3	**24A-3**	38,10	22,23	25,22	11,10	141,40	145,20	145,2	35,70	4,80	45,44	381,0	437,2	17,53	**PHC 120-3...**
140-3	**28A-3**	44,45	25,40	25,22	12,70	152,20	156,80	156,8	41,00	5,60	48,87	517,2	593,3	22,20	**PHC 140-3...**
160-3	**32A-3**	50,80	28,58	31,55	14,27	181,80	186,60	186,6	47,80	6,40	58,55	680,4	780,6	30,02	**PHC 160-3...**
180-3	**36A-3**	57,15	35,71	35,48	17,46	204,40	210,20	210,2	53,60	7,20	65,84	840,7	983,6	38,22	**PHC 180-3...**
200-3	**40A-3**	63,50	39,68	37,85	19,85	223,50	230,40	230,4	60,00	8,00	71,55	1 061,4	1 217,8	49,03	**PHC 200-3...**
240-3	**48A-3**	76,20	47,63	47,35	23,81	271,30	278,60	278,6	72,39	9,50	87,83	1 530,9	1 756,5	71,60	**PHC 240-3...**

* Bushing chain: d_1 indicates external diameter of bushing.
Standard lengths are 10 ft. and 5 m. To complete designation, add chain length. For example, a 10 ft. box of 140-1 is PHC 140-1X10FT.
One connecting link is contained per chain. For additional links, add "C/L" for connecting and "O/L" for "offset" to the designation.
For cottered, add a "C" after the number of strands. For example, 140-1 with a cottered pin is designated PHC 140-1C...

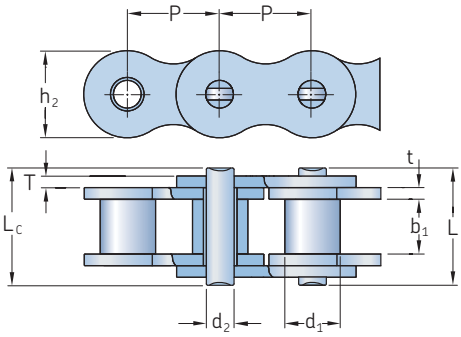

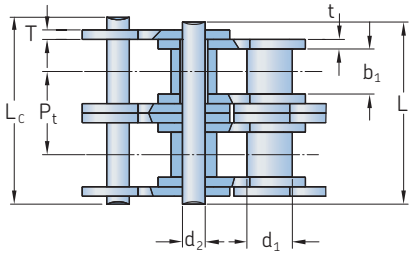

BS/ISO Chain number	Dimensions Pitch P	Roller diameter d_1 Max.	Width between inner plates b_1 Min.	Pin diameter d_2 Max.	Pin length L Max.	L_c Max.	Inner plate height h_2 Max.	Plate thickness t Max.	T Max.	Transverse pitch P_t	Ultimate tensile strength Q Min.	Average tensile strength Q_0	Mass per meter	Designation
–	mm										kN		kg/m	–
04B-1	6,00	4,00	2,80	1,85	6,80	7,8	5,00	0,60	0,60	–	3,0	3,2	0,11	**PHC 04B-1...**
05B-1	8,00	5,00	3,00	2,31	8,20	8,9	7,10	0,80	0,80	–	5,0	5,9	0,20	**PHC 05B-1...**
06B-1*	9,53	6,35	5,72	3,28	13,15	14,1	8,20	1,30	1,30	–	9,0	10,4	0,41	**PHC 06B-1...**
08B-1	12,70	8,51	7,75	4,45	16,70	18,2	11,80	1,60	1,60	–	18,0	19,4	0,69	**PHC 08B-1...**
10B-1	15,88	10,16	9,65	5,08	19,50	20,9	14,70	1,70	1,70	–	22,4	27,5	0,93	**PHC 10B-1...**
12B-1	19,05	12,07	11,68	5,72	22,50	24,2	16,00	1,85	1,85	–	29,0	32,2	1,15	**PHC 12B-1...**
16B-1	25,40	15,88	17,02	8,28	36,10	37,4	21,00	4,15	3,10	–	60,0	72,8	2,71	**PHC 16B-1...**
20B-1	31,75	19,05	19,56	10,19	41,30	45,0	26,40	4,50	3,50	–	95,0	106,7	3,70	**PHC 20B-1...**
24B-1	38,10	25,40	25,40	14,63	53,40	57,8	33,20	6,00	4,80	–	160,0	178,0	7,10	**PHC 24B-1...**
28B-1	44,45	27,94	30,99	15,90	65,10	69,5	36,70	7,50	6,00	–	200,0	222,0	8,50	**PHC 28B-1...**
32B-1	50,80	29,21	30,99	17,81	66,00	71,0	42,00	7,00	6,00	–	250,0	277,5	10,25	**PHC 32B-1...**
40B-1	63,50	39,37	38,10	22,89	82,20	89,2	52,96	8,50	8,00	–	355,0	394,0	16,35	**PHC 40B-1...**
48B-1	76,20	48,26	45,72	29,24	99,10	107,0	63,80	12,00	10,00	–	560,0	621,6	25,00	**PHC 48B-1...**
56B-1	88,90	53,98	53,34	34,32	114,60	123,0	77,80	13,50	12,00	–	850,0	940,0	35,78	**PHC 56B-1...**
64B-1	101,60	63,50	60,96	39,40	130,00	138,5	90,17	15,00	13,00	–	1 120,0	1 240,0	46,00	**PHC 64B-1...**
72B-1	114,30	72,39	68,58	44,48	147,40	156,4	103,60	17,00	15,00	–	1 400,0	1 550,0	60,80	**PHC 72B-1...**
05B-2	8,00	5,00	3,00	2,31	13,90	14,5	7,10	0,80	0,80	5,64	7,8	10,2	0,33	**PHC 05B-2...**
06B-2*	9,53	6,35	5,72	3,28	23,40	24,4	8,20	1,30	1,30	10,24	16,9	18,7	0,77	**PHC 06B-2...**
08B-2	12,70	8,51	7,75	4,45	31,20	32,2	11,80	1,60	1,60	13,92	32,0	38,7	1,34	**PHC 08B-2...**
10B-2	15,88	10,16	9,65	5,08	36,10	37,5	14,70	1,70	1,70	16,59	44,5	56,2	1,84	**PHC 10B-2...**
12B-2	19,05	12,07	11,68	5,72	42,00	43,6	16,00	1,85	1,85	19,46	57,8	66,1	2,31	**PHC 12B-2...**
16B-2	25,40	15,88	17,02	8,28	68,00	69,3	21,00	4,15	3,10	31,88	106,0	133,0	5,42	**PHC 16B-2...**
20B-2	31,75	19,05	19,56	10,19	77,80	81,5	26,40	4,50	3,50	36,45	170,0	211,2	7,20	**PHC 20B-2...**
24B-2	38,10	25,40	25,40	14,63	101,70	106,2	33,20	6,00	4,80	48,36	280,0	319,2	13,40	**PHC 24B-2...**
28B-2	44,45	27,94	30,99	15,90	124,60	129,1	36,70	7,50	6,00	59,56	360,0	406,8	16,60	**PHC 28B-2...**
32B-2	50,80	29,21	30,99	17,81	124,60	129,6	42,00	7,00	6,00	58,55	450,0	508,5	21,00	**PHC 32B-2...**
40B-2	63,50	39,37	38,10	22,89	154,50	161,5	52,96	8,50	8,00	72,29	630,0	711,9	32,00	**PHC 40B-2...**
48B-2	76,20	48,26	45,72	29,24	190,40	198,2	63,80	12,00	10,00	91,21	1 000,0	1 130,0	50,00	**PHC 48B-2...**
56B-2	88,90	53,98	53,34	34,32	221,20	229,6	77,80	13,50	12,00	106,60	1 600,0	1 760,0	71,48	**PHC 56B-2...**
64B-2	101,60	63,50	60,96	39,40	249,90	258,4	90,17	15,00	13,00	119,89	2 000,0	2 200,0	91,00	**PHC 64B-2...**
72B-2	114,30	72,39	68,58	44,48	283,70	292,7	103,60	17,00	15,00	136,27	2 500,0	2 750,0	120,40	**PHC 72B-2...**
05B-3	8,00	5,00	3,00	2,31	19,50	20,2	7,10	0,80	0,80	5,64	11,1	13,8	0,48	**PHC 05B-3...**
06B-3*	9,53	6,35	5,72	3,28	33,50	34,6	8,20	1,30	1,30	10,24	24,9	30,1	1,16	**PHC 06B-3...**
08B-3	12,70	8,51	7,75	4,45	45,10	46,1	11,80	1,60	1,60	13,92	47,5	57,8	2,03	**PHC 08B-3...**
10B-3	15,88	10,16	9,65	5,08	52,70	54,1	14,70	1,70	1,70	16,59	66,7	84,5	2,77	**PHC 10B-3...**
12B-3	19,05	12,07	11,68	5,72	61,50	63,1	16,00	1,85	1,85	19,46	86,7	101,8	3,46	**PHC 12B-3...**
16B-3	25,40	15,88	17,02	8,28	99,80	101,2	21,00	4,15	3,10	31,88	160,0	203,7	8,13	**PHC 16B-3...**
20B-3	31,75	19,05	19,56	10,19	114,20	117,9	26,40	4,50	3,50	36,45	250,0	290,0	10,82	**PHC 20B-3...**
24B-3	38,10	25,40	25,40	14,63	150,10	154,6	33,20	6,00	4,80	48,36	425,0	493,0	20,10	**PHC 24B-3...**
28B-3	44,45	27,94	30,99	15,90	184,20	188,7	36,70	7,50	6,00	59,56	530,0	609,5	24,92	**PHC 28B-3...**
32B-3	50,80	29,21	30,99	17,81	183,20	188,2	42,00	7,00	6,00	58,55	670,0	770,5	31,56	**PHC 32B-3...**
40B-3	63,50	39,37	38,10	22,89	226,80	233,8	52,96	8,50	8,00	72,29	950,0	1 092,5	48,10	**PHC 40B-3...**
48B-3	76,20	48,26	45,72	29,24	281,60	289,4	63,80	12,00	10,00	91,21	1 500,0	1 710,0	75,00	**PHC 48B-3...**
56B-3	88,90	53,98	53,34	34,32	327,80	336,2	77,80	13,50	12,00	106,60	2 240,0	2 240,0	107,18	**PHC 56B-3...**
64B-3	101,60	63,50	60,96	39,40	369,80	378,3	90,17	15,00	13,00	119,89	3 000,0	3 300,0	136,00	**PHC 64B-3...**
72B-3	114,30	72,39	68,58	44,48	420,00	429,0	103,60	17,00	15,00	136,27	3 750,0	4 125,0	180,00	**PHC 72B-3...**

* Straight side plates.
Standard lengths are 10 ft. and 5 m. To complete designation, add chain length. For example, a 5 m box of 08B-1 is PHC 08B-1X5MTR.
One connecting link is contained per chain. For additional links, add "C/L" for "connecting" and "O/L" for "offset" to the designation.

Roller chain attachments

A-1 | K-1

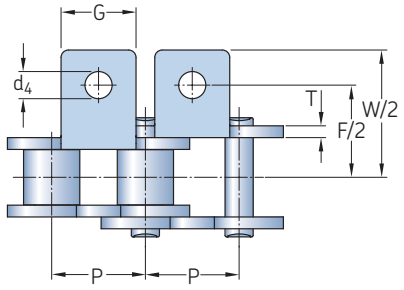

A-1

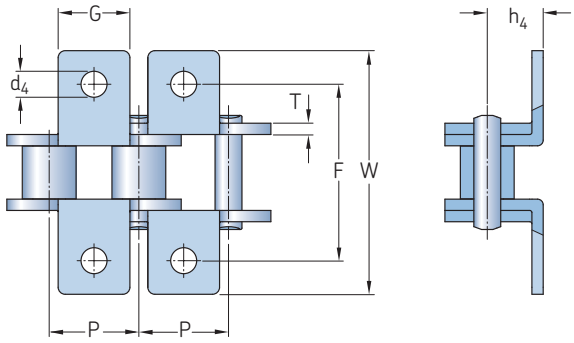

K-1

ANSI Chain number	BS/ISO Chain number	Dimensions							Designation
		P	G	F	W	T	h_4	d_4	
–	–	mm							–
35-1	**06C-1**	9,53	7,9	19,00	28,6	1,30	6,35	3,4	**PHC 35-1...**
40-1	**08A-1**	12,70	9,5	25,40	35,2	1,50	7,90	3,4	**PHC 40-1...**
41-1	**085-1**	12,70	9,5	24,00	33,4	1,30	6,90	3,6	**PHC 41-1...**
50-1	**10A-1**	15,88	12,7	31,75	46,2	2,03	10,30	5,5	**PHC 50-1...**
60-1	**12A-1**	19,05	15,9	38,10	55,6	2,42	11,90	5,5	**PHC 60-1...**
80-1	**16A-1**	25,40	19,1	50,80	64,8	3,25	15,90	6,8	**PHC 80-1...**
100-1	**20A-1**	31,75	25,4	63,50	87,3	4,00	19,80	9,2	**PHC 100-1...**
120-1	**24A-1**	38,10	28,6	76,20	108,5	4,80	23,00	9,8	**PHC 120-1...**
140-1	**28A-1**	44,45	34,9	88,90	123,0	5,60	28,60	11,4	**PHC 140-1...**
160-1	**32A-1**	50,80	38,1	101,60	142,8	6,40	31,75	13,1	**PHC 160-1...**
200-1	**40A-1**	63,50	50,8	127,00	179,0	8,00	42,88	16,3	**PHC 200-1...**
–	**06B-1***	9,53	8,0	19,04	27,0	1,30	6,50	3,5	**PHC 06B-1...**
–	**08B-1**	12,70	9,5	25,40	36,4	1,60	8,90	4,5	**PHC 08B-1...**
–	**10B-1**	15,88	14,3	31,75	44,6	1,70	10,31	5,3	**PHC 10B-1...**
–	**12B-1**	19,05	16,0	38,10	52,4	1,85	13,46	6,4	**PHC 12B-1...**
–	**16B-1**	25,40	19,1	50,80	72,6	3,10	15,88	6,4	**PHC 16B-1...**
–	**20B-1**	31,75	35,0	63,50	100,5	3,50	19,80	9,0	**PHC 20B-1...**
–	**24B-1**	38,10	30,0	76,20	108,4	4,80	26,67	10,5	**PHC 24B-1...**
–	**28B-1**	44,45	35,0	88,90	123,0	6,00	28,58	13,1	**PHC 28B-1...**
–	**32B-1**	50,80	38,1	101,60	142,8	6,00	31,75	13,1	**PHC 32B-1...**

* Straight side plates
To complete designation, add attachment spacing and type followed by chain length. For example, PHC 40-1-L2A1X10FT (ANSI 40-1 with A-1 attachment on every second link, 10 ft. length).
Note: Also available in stainless steel. When ordering, add SS after the chain number. For example, PHC 40-1SS-L1A1X10FT.

Roller chain attachments

SA-1/M1 | SK-1/M1

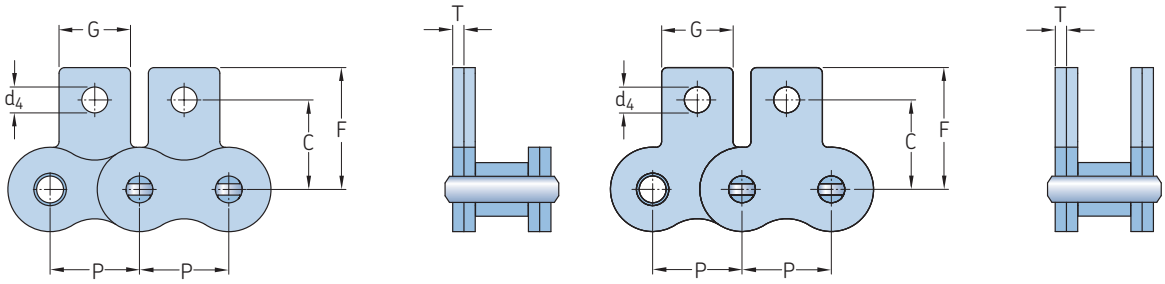

SA-1/M1 SK-1/M1

ANSI Chain number	BS/ISO Chain number	Dimensions						Designation
		P	G	C	F	T	d_4	
–	–	mm						–
35-1	**06C-1**	9,53	7,9	9,50	14,55	1,30	3,4	**PHC 35-1...**
40-1	**08A-1**	12,70	9,5	12,70	19,05	1,50	3,4	**PHC 40-1...**
41-1	**085-1**	12,70	9,5	11,85	16,55	1,30	3,6	**PHC 41-1...**
50-1	**10A-1**	15,88	12,7	15,90	25,25	2,03	5,5	**PHC 50-1...**
60-1	**12A-1**	19,05	15,9	18,30	29,33	2,42	5,5	**PHC 60-1...**
80-1	**16A-1**	25,40	19,1	24,60	34,70	3,25	6,8	**PHC 80-1...**
100-1	**20A-1**	31,75	25,4	31,80	43,30	4,00	9,2	**PHC 100-1...**
120-1	**24A-1**	38,10	28,6	36,50	51,60	4,80	9,8	**PHC 120-1...**
140-1	**28A-1**	44,45	34,9	44,50	62,00	5,60	11,4	**PHC 140-1...**
160-1	**32A-1**	50,80	38,1	50,80	69,85	6,40	13,1	**PHC 160-1...**
200-1	**40A-1**	63,50	50,8	63,50	88,90	8,00	16,3	**PHC 200-1...**
–	**06B-1***	9,53	8,0	9,52	13,50	1,30	3,5	**PHC 06B-1...**
–	**08B-1**	12,70	9,5	13,35	18,90	1,60	4,3	**PHC 08B-1...**
–	**10B-1**	15,88	14,3	16,50	22,95	1,70	5,3	**PHC 10B-1...**
–	**12B-1**	19,05	16,0	21,45	28,60	1,85	6,4	**PHC 12B-1...**
–	**16B-1**	25,40	19,1	23,15	34,00	3,10	6,4	**PHC 16B-1...**
–	**20B-1**	31,75	35,0	30,50	45,70	3,50	9,0	**PHC 20B-1...**

* Straight side plates
To complete designation, add attachment spacing and type followed by chain length. For example, PHC 80-1-L1SK1X10FT (ANSI 80-1 with SK-1 attachment on every link, 10 ft. length).
Note: Also available in stainless steel. When ordering, add SS after the chain number. For example, PHC 80-1SS-L1SK1X10FT.

Roller chain attachments

WA-1 · WA-2 | WK-1 · WK-2

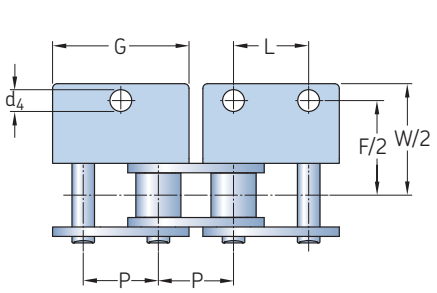

WA-1,WA-2

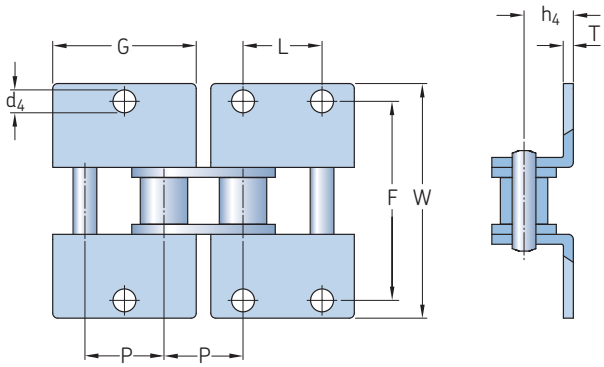

WK-1,WK-2

ANSI Chain number	BS/ISO Chain number	Dimensions								Designation
		P	G	L	F	W	T	h_4	d_4	
–	–	mm								–
35-1	**06C-1**	9,53	17,32	9,53	19,00	28,6	1,30	6,35	2,80	**PHC 35-1...**
40-1	**08A-1**	12,70	23,00	12,70	25,40	35,6	1,50	7,90	3,40	**PHC 40-1...**
41-1	**085-1**	12,70	22,30	12,70	24,00	35,0	1,30	7,20	4,85	**PHC 41-1...**
50-1	**10A-1**	15,88	28,80	15,88	31,75	46,8	2,03	10,30	5,50	**PHC 50-1...**
60-1	**12A-1**	19,05	34,65	19,05	38,10	56,4	2,42	11,90	5,50	**PHC 60-1...**
80-1	**16A-1**	25,40	45,90	25,40	50,80	73,2	3,25	15,90	6,80	**PHC 80-1...**
100-1	**20A-1**	31,75	57,65	31,75	63,50	89,8	4,00	19,80	9,20	**PHC 100-1...**
120-1	**24A-1**	38,10	69,30	38,10	76,20	108,8	4,80	23,00	9,80	**PHC 120-1...**
140-1	**28A-1**	44,45	80,45	44,45	88,90	123,0	5,60	28,60	11,40	**PHC 140-1...**
160-1	**32A-1**	50,80	92,00	50,80	101,60	142,8	6,40	31,75	13,10	**PHC 160-1...**
200-1	**40A-1**	63,50	115,50	63,50	127,00	179,0	8,00	42,88	16,30	**PHC 200-1...**
–	**08B-1**	12,70	24,00	12,70	25,40	36,4	1,60	8,90	4,30	**PHC 08B-1...**
–	**10B-1**	15,88	29,58	15,88	31,80	44,6	1,70	10,31	5,30	**PHC 10B-1...**
–	**12B-1**	19,05	34,05	19,05	38,10	52,0	1,85	13,46	6,40	**PHC 12B-1...**
–	**16B-1**	25,40	46,40	25,40	50,80	72,6	3,10	15,88	6,40	**PHC 16B-1...**
–	**20B-1**	31,75	58,10	31,75	63,00	100,5	3,50	19,80	9,00	**PHC 20B-1...**
–	**24B-1**	38,10	71,30	38,10	76,20	108,4	4,80	26,67	10,50	**PHC 24B-1...**
–	**28B-1**	44,45	81,10	44,45	88,90	123,0	6,00	28,58	13,10	**PHC 28B-1...**
–	**32B-1**	50,80	92,80	50,80	101,60	142,8	6,00	31,75	13,10	**PHC 32B-1...**

To complete designation, add attachment spacing and type followed by chain length. For example, PHC 80-1-L2WA2X10FT (ANSI 80-1 with WA-2 attachment on every second link, 10 ft. length).
Note: Also available in stainless steel. When ordering, add SS after the chain number. For example, PHC 80-1SS-L2WA2X10FT.

Roller chain attachments

WSA-1 · WSA-2 | WSK-1 · WSK-2

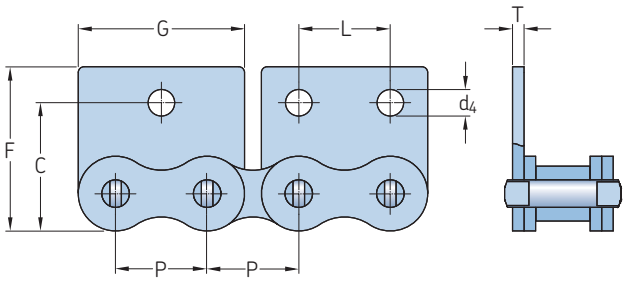

WSA-1,WSA-2

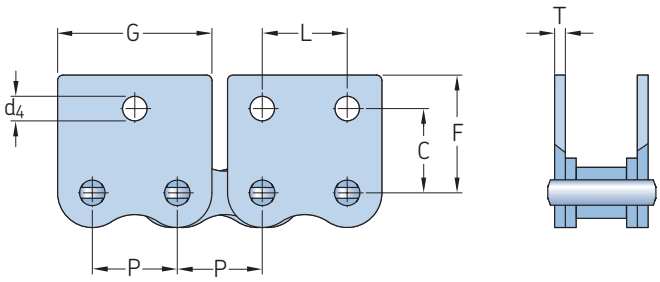

WSK-1,WSK-2

ANSI Chain number	BS/ISO Chain number	Dimensions							Designation
		P	G	L	C	F	T	d_4	
–	–	mm							–
35-1	**06C-1**	9,53	17,32	9,53	9,50	14,55	1,30	2,8	**PHC 35-1...**
40-1	**08A-1**	12,70	23,00	12,70	12,70	17,40	1,50	3,4	**PHC 40-1...**
41-1	**085-1**	12,70	21,20	12,70	11,85	16,55	1,30	3,6	**PHC 41-1...**
50-1	**10A-1**	15,88	28,80	15,88	15,90	23,05	2,03	5,5	**PHC 50-1...**
60-1	**12A-1**	19,05	34,65	19,05	18,30	26,86	2,42	5,5	**PHC 60-1...**
80-1	**16A-1**	25,40	45,90	25,40	24,60	35,45	3,25	6,8	**PHC 80-1...**
100-1	**20A-1**	31,75	57,65	31,75	31,80	44,00	4,00	9,2	**PHC 100-1...**
120-1	**24A-1**	38,10	69,30	38,10	36,50	51,60	4,80	9,8	**PHC 120-1...**
140-1	**28A-1**	44,45	80,45	44,45	44,50	62,00	5,60	11,4	**PHC 140-1...**
160-1	**32A-1**	50,80	92,00	50,80	50,80	69,85	6,40	13,1	**PHC 160-1...**
200-1	**40A-1**	63,50	115,50	63,50	63,50	88,90	8,00	16,3	**PHC 200-1...**
–	**08B-1**	12,70	23,30	12,70	13,35	18,90	1,60	4,3	**PHC 08B-1...**
–	**10B-1**	15,88	29,58	15,88	16,50	22,95	1,70	5,3	**PHC 10B-1...**
–	**12B-1**	19,05	34,05	19,05	21,45	28,60	1,85	6,4	**PHC 12B-1...**
–	**16B-1**	25,40	46,40	25,40	23,15	34,00	3,10	6,4	**PHC 16B-1...**
–	**20B-1**	31,75	58,10	31,75	30,50	45,70	3,50	9,0	**PHC 20B-1...**

To complete designation, add attachment spacing and type followed by chain length. For example, PHC 80-1-L4WSA1X10FT (ANSI 80-1 with WSA-1 attachment on every fourth link, 10 ft. length).
Note: Also available in stainless steel. When ordering, add SS after the chain number. For example, PHC 80-1SS L4WSA1X10FT.

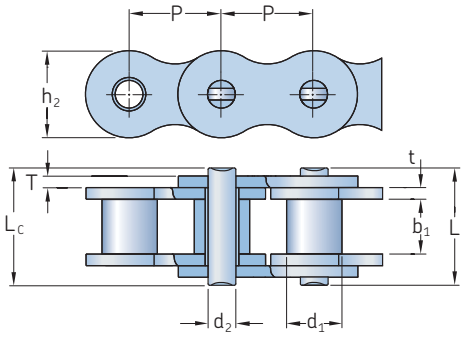

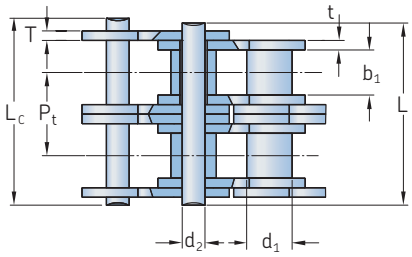

Xtra Strength type	ANSI Chain number	Dimensions Pitch P	Roller diameter d_1 Max.	Width between inner plates b_1 Min.	Pin diameter d_2 Max.	Pin length L Max.	L_c Max.	Pin length cottered L_c Max.	Inner plate height h_2 Max.	Plate thickness T Max.	Transverse pitch P_t	Ultimate tensile strength Q Min.	Average tensile strength Q_0	Mass per meter	Designation
–	–	mm										kN		kg/m	–
H	**35H-1***	9,53	5,08	4,77	3,58	13,3	14,3	–	9,00	1,50	–	7,9	10,8	0,41	**PHC 35H-1...**
	40H-1	12,70	7,95	7,85	3,96	18,8	19,9	–	12,00	2,03	–	14,1	19,1	0,82	**PHC 40H-1...**
	50H-1	15,88	10,16	9,40	5,08	22,1	23,4	24,4	15,09	2,42	–	22,2	30,2	1,25	**PHC 50H-1...**
	60H-1	19,05	11,91	12,57	5,94	29,2	31,0	31,6	18,00	3,25	–	31,8	42,7	1,87	**PHC 60H-1...**
	80H-1	25,40	15,88	15,75	7,92	36,2	37,7	39,4	24,00	4,00	–	56,7	71,4	3,10	**PHC 80H-1...**
	100H-1	31,75	19,05	18,90	9,53	43,6	46,9	46,9	30,00	4,80	–	88,5	112,4	4,52	**PHC 100H-1...**
	120H-1	38,10	22,23	25,22	11,10	53,5	57,5	57,5	35,70	5,60	–	127,0	160,9	6,60	**PHC 120H-1...**
	140H-1	44,45	25,40	25,22	12,70	57,6	62,2	62,2	41,00	6,40	–	172,4	217,3	8,30	**PHC 140H-1...**
	160H-1	50,80	28,58	31,55	14,27	68,2	73,0	73,0	47,80	7,20	–	226,8	285,8	10,30	**PHC 160H-1...**
	180H-1	57,15	35,71	35,48	17,46	75,9	81,6	–	53,60	8,00	–	281,0	341,8	14,83	**PHC 180H-1...**
	200H-1	63,50	39,68	37,85	19,85	86,6	93,5	93,5	60,00	9,50	–	353,8	444,5	19,16	**PHC 200H-1...**
	240H-1	76,20	47,63	47,35	23,81	109,6	115,9	–	72,30	12,70	–	510,3	622,5	30,40	**PHC 240H-1...**
	60H-2	19,05	11,91	12,57	5,94	55,3	57,1	57,7	18,00	3,25	26,11	63,6	84,5	3,71	**PHC 60H-2...**
	80H-2	25,40	15,88	15,75	7,92	68,8	70,3	72,0	24,00	4,00	32,59	113,4	145,3	6,15	**PHC 80H-2...**
	100H-2	31,75	19,05	18,90	9,53	82,7	86,0	86,0	30,00	4,80	39,09	177,0	225,9	9,03	**PHC 100H-2...**
	120H-2	38,10	22,23	25,22	11,10	102,4	106,4	106,4	35,70	5,60	48,87	254,0	322,7	13,13	**PHC 120H-2...**
	140H-2	44,45	25,40	25,22	12,70	109,8	114,4	114,4	41,00	6,40	52,20	344,8	437,7	16,60	**PHC 140H-2...**
	160H-2	50,80	28,58	31,55	14,27	130,1	134,9	134,9	47,80	7,20	61,90	453,6	571,6	20,20	**PHC 160H-2...**
	200H-2	63,50	39,68	37,85	19,85	164,9	171,8	171,8	60,00	9,50	78,31	707,6	894,9	38,11	**PHC 200H-2...**
	60H-3	19,05	11,91	12,57	5,94	81,4	83,2	83,8	18,00	3,25	26,11	95,4	113,9	5,54	**PHC 60H-3...**
	80H-3	25,40	15,88	15,75	7,92	101,4	102,9	104,6	24,00	4,00	32,59	170,1	203,5	9,42	**PHC 80H-3...**
	100H-3	31,75	19,05	18,90	9,53	121,8	125,1	125,1	30,00	4,80	39,09	265,5	314,8	12,96	**PHC 100H-3...**
	120H-3	38,10	22,23	25,22	11,10	151,2	155,2	155,2	35,70	5,60	48,87	381,0	444,7	19,64	**PHC 120H-3...**
	140H-3	44,45	25,40	25,22	12,70	162,0	166,6	166,6	41,00	6,40	52,20	517,2	598,4	24,90	**PHC 140H-3...**
	160H-3	50,80	28,58	31,55	14,27	192,0	196,8	196,8	47,80	7,20	61,90	680,4	787,3	30,10	**PHC 160H-3...**
	200H-3	63,50	39,68	37,85	19,85	243,2	250,1	250,1	60,00	9,50	78,31	1 061,4	1 228,2	57,06	**PHC 200H-3...**
SH	**25SH-1***	6,35	3,30	3,18	2,01	9,0	–	–	6,00	2,01	–	5,1	5,6	2,17	**PHC 25SH-1X...**
	35SH-1*	9,53	5,08	4,77	3,58	13,3	14,3	–	9,00	1,50	–	11,0	13,6	0,41	**PHC 35SH-1X...**
	40SH-1	12,70	7,95	7,85	3,96	18,8	19,9	–	12,00	2,03	–	22,4	24,8	0,82	**PHC 40SH-1X...**
	50SH-1	15,88	10,16	9,40	5,08	22,1	23,4	–	15,09	2,42	–	30,4	36,2	1,25	**PHC 50SH-1X...**
	60SH-1	19,05	11,91	12,57	5,94	29,2	31,6	–	18,00	3,25	–	44,1	50,4	1,87	**PHC 60SH-1X...**
	80SH-1	25,40	15,88	15,75	7,92	36,2	37,7	–	24,00	4,00	–	88,2	93,0	3,10	**PHC 80SH-1X...**
	100SH-1	31,75	19,05	18,90	9,53	43,6	46,9	–	30,00	4,80	–	116,6	129,1	4,52	**PHC 100SH-1X...**
	120SH-1	38,10	22,23	25,22	11,10	53,5	57,5	–	35,70	5,60	–	158,2	175,3	6,60	**PHC 120SH-1X...**
	140SH-1	44,45	25,40	25,22	12,70	57,6	62,2	–	41,00	6,40	–	206,0	266,5	8,30	**PHC 140SH-1X...**
	160SH-1	50,80	28,58	31,55	14,27	68,2	73,0	–	47,80	7,20	–	274,0	293,0	10,30	**PHC 160SH-1X...**
	200SH-1	63,50	39,68	37,85	19,85	86,6	93,5	–	60,00	9,50	–	506,1	562,3	19,16	**PHC 200SH-1X...**
SPH	**80SPH-1**	25,40	15,88	15,75	7,94	32,7	36,5	–	24,10	3,20	–	77,5	85,3	2,86	**PHC80SPH-1X...**
	100SPH-1	31,75	19,05	18,95	9,54	40,4	44,7	–	30,10	4,00	–	115,5	127,0	4,21	**PHC100SPH-1X...**
	120SPH-1	38,10	22,23	25,22	11,11	50,3	54,3	–	36,20	4,80	–	165,0	186,0	6,36	**PHC120SPH-1X...**
	140SPH-1	44,45	25,40	25,22	12,71	54,4	59,0	–	42,20	5,60	–	222,7	245,0	8,04	**PHC140SPH-1X...**
	160SPH-1	50,80	28,58	31,55	14,29	64,8	69,6	–	48,20	6,40	–	285,5	314,0	10,80	**PHC160SPH-1X...**
	200SPH-1	63,50	39,68	37,85	19,85	80,3	87,2	–	60,30	8,00	–	445,5	490,0	18,00	**PHC200SPH-1X...**
	80SPH-2	25,40	15,88	15,75	7,94	62,7	65,8	–	24,10	3,20	29,29	155,0	170,6	5,68	**PHC80SPH-2X...**
	100SPH-2	31,75	19,05	18,95	9,54	76,4	80,5	–	30,10	4,00	35,76	231,0	255,0	8,34	**PHC100SPH-2X...**
	120SPH-2	38,10	22,23	25,22	11,11	95,8	99,7	–	36,20	4,80	45,44	339,0	373,0	12,63	**PHC120SPH-2X...**
	140SPH-2	44,45	25,40	25,22	12,71	103,3	107,9	–	42,20	5,60	48,87	445,5	490,0	15,92	**PHC140SPH-2X...**
	160SPH-2	50,80	28,58	31,55	14,29	123,3	128,1	–	48,20	6,40	58,55	571,0	628,0	21,43	**PHC160SPH-2X...**
	200SPH-2	63,50	39,68	37,85	19,85	151,9	158,8	–	60,30	8,00	71,55	892,0	981,0	35,00	**PHC200SPH-2X...**
	80SPH-3	25,40	15,88	15,75	7,94	91,7	95,1	–	24,10	3,20	29,29	232,5	255,9	8,18	**PHC80SPH-3X...**
	100SPH-3	31,75	19,05	18,95	9,54	112,2	116,3	–	30,10	4,00	35,76	347,3	382,0	12,47	**PHC100SPH-3X...**
	120SPH-3	38,10	22,23	25,22	11,11	141,4	145,2	–	36,20	4,80	45,44	508,0	559,0	18,90	**PHC120SPH-3X...**

* Bushing chain: d_1 indicates external diameter of bushing.
Standard lengths are 10 ft. and 5 m. To complete designation, add chain length. For example, a 5 m box of 160H-1 is PHC 160H-1X5MTR.
One connecting link is contained per chain. For additional links, add "C/L" for connecting and "O/L" for "offset" to the designation.
For cottered, add a "C" after the number of strands. For example, 160H-1 with a cottered pin is designated PHC 160H-1C...
For heavy duty multistrand chain drives with H, SH or SHH chains, special sprockets are needed due to differences in transverse pitch.

Xtra Strength type	ANSI Chain number	Dimensions Pitch P	Roller diameter d_1 Max.	Width between inner plates b_1 Min.	Pin diameter d_2 Max.	Pin length L Max.	L_c Max.	Pin length cottered L_c Max.	Inner plate height h_2 Max.	Plate thickness T Max.	Transverse pitch P_t	Ultimate tensile strength Q Min.	Average tensile strength Q_0	Mass per meter	Designation
–	–	mm										kN		kg/m	–
SPH	**140SPH-3**	44,45	25,40	25,22	12,71	152,2	156,8	–	42,20	5,60	48,87	668,0	735,0	23,84	**PHC140SPH-3X...**
	160SPH-3	50,80	28,58	31,55	14,29	181,8	186,6	–	48,20	6,40	58,55	855,5	941,0	32,10	**PHC160SPH-3X...**
	200SPH-3	63,50	39,68	37,85	19,85	223,5	230,4	–	60,30	8,00	71,55	1 336,4	1 470,0	52,50	**PHC200SPH-3X...**
SHH	**80SHH-1**	25,40	15,88	15,75	7,94	36,2	38,9	–	24,10	4,00	–	89,2	98,1	3,36	**PHC 80SHH-1X...**
	100SHH-1	31,75	19,05	18,90	9,54	43,6	46,9	–	30,10	4,80	–	131,8	145,0	4,90	**PHC 100SHH-1X...**
	120SHH-1	38,10	22,23	25,22	11,11	53,5	57,5	–	36,20	5,60	–	176,0	196,0	7,12	**PHC 120SHH-1X...**
	140SHH-1	44,45	25,40	25,22	12,71	57,6	62,2	–	42,20	6,40	–	231,9	255,0	8,88	**PHC 140SHH-1X...**
	160SHH-1	50,80	28,58	31,55	14,29	68,2	73,0	–	48,20	7,20	–	294,5	324,0	11,72	**PHC 160SHH-1X...**
	200SHH-1	63,50	39,68	37,85	19,85	86,6	93,5	–	60,30	9,50	–	543,6	598,0	19,80	**PHC 200SHH-1X...**
	80SHH-2	25,40	15,88	15,75	7,94	68,8	72,0	–	24,10	4,00	32,59	178,4	196,2	6,65	**PHC 80SHH-2X...**
	100SHH-2	31,75	19,05	18,90	9,54	82,7	86,0	–	30,10	4,80	39,09	263,6	290,0	9,71	**PHC 100SHH-2X...**
	120SHH-2	38,10	22,23	25,22	11,11	102,4	106,4	–	36,20	5,60	48,87	356,4	392,0	14,12	**PHC 120SHH-2X...**
	140SHH-2	44,45	25,40	25,22	12,71	109,8	114,4	–	42,20	6,40	52,20	463,6	510,0	17,38	**PHC 140SHH-2X...**
	160SHH-2	50,80	28,58	31,55	14,29	130,1	134,9	–	48,20	7,20	61,90	588,0	647,0	23,00	**PHC 160SHH-2X...**
	200SHH-2	63,50	39,68	37,85	19,85	164,9	171,8	–	60,30	9,50	78,31	1 091,0	1 200,0	38,50	**PHC 200SHH-2X...**
	80SHH-3	25,40	15,88	15,75	7,94	101,4	104,6	–	24,10	4,00	32,59	267,6	294,3	9,95	**PHC 80SHH-3X...**
	100SHH-3	31,75	19,05	18,90	9,54	121,8	125,1	–	30,10	4,80	39,09	395,4	435,0	14,53	**PHC 100SHH-3X...**
	120SHH-3	38,10	22,23	25,22	11,11	151,2	155,2	–	36,20	5,60	48,87	534,5	588,0	21,12	**PHC 120SHH-3X...**
	140SHH-3	44,45	25,40	25,22	12,71	162,0	166,6	–	42,20	6,40	52,20	695,5	765,0	25,88	**PHC 140SHH-3X...**
	160SHH-3	50,80	28,58	31,55	14,29	192,0	196,8	–	48,20	7,20	61,90	882,7	971,0	34,22	**PHC 160SHH-3X...**
	200SHH-3	63,50	39,68	37,85	19,85	243,2	250,1	–	60,30	9,50	78,31	1 627,3	1 790,0	57,29	**PHC 200SHH-3X...**

* Bushing chain: d_1 indicates external diameter of bushing.
Standard lengths are 10 ft. and 5 m. To complete designation, add chain length. For example, a 5 m box of 160H-1 is PHC 160H-1X5MTR.
One connecting link is contained per chain. For additional links, add "C/L" for connecting and "O/L" for "offset" to the designation.
For cottered, add a "C" after the number of strands. For example, 160H-1 with a cottered pin is designated PHC 160H-1C...
For heavy duty multistrand chain drives with H, SH or SHH chains, special sprockets are needed due to differences in transverse pitch.

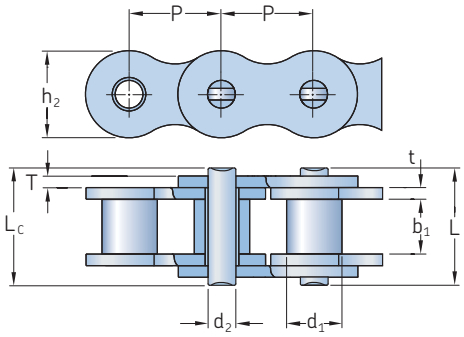

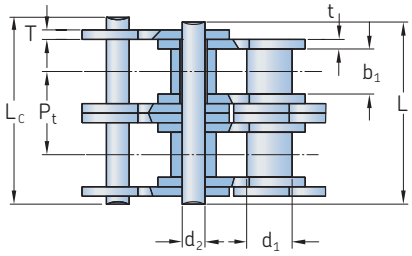

Corrosion resistance type	Chain number	Dimensions Pitch P	Roller diameter d_1 Max.	Width between inner plates b_1 Min.	Pin diameter d_2 Max.	Pin length L Max.	L_c Max.	Inner plate height h_2 Max.	Plate thickness t Max.	T Max.	Ultimate tensile strength Q Min.	Mass per meter	Designation
–	–	mm									kN	kg/m	–
SS	**25-1SS**[1]	6,35	3,30	3,18	2,31	7,90	8,40	6,00	0,80	0,80	2,5	0,15	**PHC 25-1SS...**
Plated	**25-1**[1]	6,35	3,30	3,18	2,31	7,90	8,40	6,00	0,80	0,80	3,5	0,15	**PHC 25-1...**
SS	**35-1SS**[1]	9,53	5,08	4,77	3,58	12,40	13,17	9,00	1,30	1,30	5,5	0,33	**PHC 35-1SS...**
Plated	**35-1**[1]	9,53	5,08	4,77	3,58	12,40	13,17	9,00	1,30	1,30	7,9	0,33	**PHC 35-1...**
SS	**40-1SS**	12,70	7,95	7,85	3,96	16,60	17,80	12,00	1,50	1,50	9,6	0,63	**PHC 40-1SS...**
Plated	**40-1**	12,70	7,95	7,85	3,96	16,60	17,80	12,00	1,50	1,50	14,1	0,62	**PHC 40-1...**
SS	**41-1SS**	12,70	7,77	6,25	3,58	13,75	15,00	9,91	1,30	1,30	6,0	0,46	**PHC 41-1SS...**
Plated	**41-1**	12,70	7,77	6,25	3,58	13,75	15,00	9,91	1,30	1,30	6,7	0,41	**PHC 41-1...**
SS	**50-1SS**	15,88	10,16	9,40	5,08	20,70	22,20	15,09	2,03	2,03	15,2	1,03	**PHC 50-1SS...**
Plated	**50-1**	15,88	10,16	9,40	5,08	20,70	22,20	15,09	2,03	2,03	22,2	1,02	**PHC 50-1...**
SS	**60-1SS**	19,05	11,91	12,57	5,94	25,90	27,70	18,00	2,42	2,42	21,7	1,51	**PHC 60-1SS...**
Plated	**60-1**	19,05	11,91	12,57	5,94	25,90	27,70	18,00	2,42	2,42	31,8	1,50	**PHC 60-1...**
SS	**80-1SS**	25,40	15,88	15,75	7,92	32,70	35,00	24,00	3,25	3,25	38,9	2,62	**PHC 80-1SS...**
Plated	**80-1**	25,40	15,88	15,75	7,92	32,70	35,00	24,00	3,25	3,25	56,7	2,60	**PHC 80-1...**
SS	**100-1SS**	31,75	19,05	18,90	9,53	40,40	44,70	30,00	4,00	4,00	60,0	3,94	**PHC 100-1SS...**
Plated	**100-1**	31,75	19,05	18,90	9,53	40,40	44,70	30,00	4,00	4,00	88,5	3,91	**PHC 100-1...**
SS	**120-1SS**	38,10	22,23	25,22	11,10	50,30	54,30	35,70	4,80	4,80	72,5	5,72	**PHC 120-1SS...**
Plated	**120-1**	38,10	22,23	25,22	11,10	50,30	54,30	35,70	4,80	4,80	127,0	5,62	**PHC 120-1...**
SS	**140-1SS**	44,45	25,40	25,22	12,70	54,40	59,00	41,00	5,60	5,60	94,0	7,70	**PHC 140-1SS...**
Plated	**140-1**	44,45	25,40	25,22	12,70	54,40	59,00	41,00	5,60	5,60	172,4	7,50	**PHC 140-1...**
Plated	**160-1**	50,80	28,58	31,55	14,27	64,80	69,60	47,80	6,40	6,40	226,8	10,10	**PHC 160-1...**
SS	**04B-1SS**	6,00	4,00	2,80	1,85	6,80	7,80	5,00	0,60	0,60	2,0	0,11	**PHC 04B-1SS...**
Plated	**04B-1**	6,00	4,00	2,80	1,85	6,80	7,80	5,00	0,60	0,60	3,0	0,11	**PHC 04B-1...**
SS	**05B-1SS**	8,00	5,00	3,00	2,31	8,20	8,90	7,10	0,80	0,80	3,5	0,20	**PHC 05B-1SS...**
Plated	**05B-1**	8,00	5,00	3,00	2,31	8,20	8,90	7,10	0,80	0,80	5,0	0,20	**PHC 05B-1...**
SS	**06B-1SS**[2]	9,53	6,35	5,72	3,28	13,15	14,10	8,20	1,30	1,30	6,2	0,41	**PHC 06B-1SS...**
Plated	**06B-1**[2]	9,53	6,35	5,72	3,28	13,15	14,10	8,20	1,30	1,30	9,0	0,41	**PHC 06B-1...**
SS	**08B-1SS**	12,70	8,51	7,75	4,45	16,70	18,20	11,80	1,60	1,60	12,0	0,70	**PHC 08B-1SS...**
Plated	**08B-1**	12,70	8,51	7,75	4,45	16,70	18,20	11,80	1,60	1,60	18,0	0,69	**PHC 08B-1...**
SS	**10B-1SS**	15,88	10,16	9,65	5,08	19,50	20,90	14,70	1,70	1,70	14,5	0,94	**PHC 10B-1SS...**
Plated	**10B-1**	15,88	10,16	9,65	5,08	19,50	20,90	14,70	1,70	1,70	22,4	0,93	**PHC 10B-1...**
SS	**12B-1SS**	19,05	12,07	11,68	5,72	22,50	24,20	16,00	1,85	1,85	18,5	1,16	**PHC 12B-1SS...**
Plated	**12B-1**	19,05	12,07	11,68	5,72	22,50	24,20	16,00	1,85	1,85	29,0	1,15	**PHC 12B-1...**
SS	**16B-1SS**	25,40	15,88	17,02	8,28	36,10	37,40	21,00	4,15	3,10	40,0	2,73	**PHC 16B-1SS...**
Plated	**16B-1**	25,40	15,88	17,02	8,28	36,10	37,40	21,00	4,15	3,10	60,0	2,71	**PHC 16B-1...**
SS	**20B-1SS**	31,75	19,05	19,56	10,19	41,30	45,00	26,40	4,50	3,50	59,0	3,73	**PHC 20B-1SS...**
Plated	**20B-1**	31,75	19,05	19,56	10,19	41,30	45,00	26,40	4,50	3,50	95,0	3,70	**PHC 20B-1...**
SS	**24B-1SS**	38,10	25,40	25,40	14,63	53,40	57,80	33,20	6,00	4,80	104,0	7,20	**PHC 24B-1SS...**
Plated	**24B-1**	38,10	25,40	25,40	14,63	53,40	57,80	33,20	6,00	4,80	160,0	7,10	**PHC 24B-1...**
Plated	**28B-1**	44,45	27,94	30,99	15,90	65,10	69,50	36,70	7,50	6,00	200,0	8,50	**PHC 28B-1...**
SS	**32B-1SS**	50,80	29,21	30,99	17,81	66,00	71,00	42,00	7,00	6,00	150,0	10,22	**PHC 32B-1SS...**
Plated	**32B-1**	50,80	29,21	30,99	17,81	66,00	71,00	42,00	7,00	6,00	250,0	10,25	**PHC 32B-1 ...**

[1] Bushing chain: d_1 indicates external diameter of bushing. [2] Straight side plates. Note: Duplex and double pitch plated chains are available in all sizes.

When ordering plated chains, add suffix according to material selection after chain number: DR for dacrotized, NP for nickel-plated and ZP for zinc plated. For example, PHC 50-1DR... 50-1 ANSI Simplex dacrotized chain and PHC 60-2NP... ANSI Duplex nickel-plated chain.

Standard lengths are 10 ft. and 5 m. To complete designation, add chain length. For example, a 10 ft. box of 12B-1NP is PHC 12B-1NPX10FT.

One connecting link is contained per chain. For additional links, add "C/L" for "connecting" and "O/L" for "offset" to the designation.

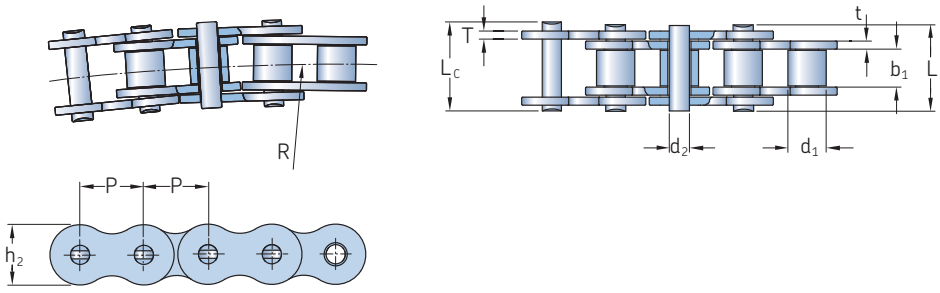

Side bow chains

Chain number	Dimensions Pitch P	Roller diameter d_1 Max.	Width between inner plates b_1 Min.	Pin diameter d_2 Max.	Pin length L Max.	L_c Max.	Inner plate height h_2 Max.	Plate thickness t Max.	T Max.	Side bow radius R Min.	Ultimate tensile strength Q Min.	Average tensile strength Q_0	Mass per meter	Designation
–	mm										kN		kg/m	–
40-1SB	12,70	7,95	7,85	3,96	16,9	18,1	11,7	1,50	1,50	350	13,8	15,2	0,80	**PHC 40-1SB...**
43-1SB	12,70	7,95	7,85	3,45	18,3	19,5	11,7	1,50	1,50	305	12,0	13,2	0,64	**PHC 43-1SB...**
50-1SB	15,88	10,16	9,40	4,37	20,7	22,7	14,9	2,03	2,03	400	20,6	22,7	1,09	**PHC 50-1SB...**
60-1SB	19,05	11,91	12,57	5,34	26,6	28,4	18,0	2,42	2,42	500	15,7	17,3	1,54	**PHC 60-1SB...**
63-1SB	19,05	11,91	12,68	5,08	28,8	30,6	17,2	2,42	2,03	350	12,5	20,0	1,40	**PHC 63-1SB...**
80-1SB	25,40	15,88	15,75	7,19	34,0	37,3	24,0	3,25	3,25	711	40,9	42,0	2,60	**PHC 80-1SB...**
08B-1SB	12,70	8,51	7,75	3,97	17,4	18,7	11,8	1,60	1,60	400	14,0	15,4	0,70	**PHC 08B-1SB...**
10B-1SB	15,88	10,16	9,65	4,50	20,1	21,5	14,7	1,70	1,70	400	15,6	17,2	0,93	**PHC 10B-1SB...**
12B-1SB	19,05	12,07	11,68	5,12	23,1	24,8	16,0	1,85	1,85	500	20,5	22,6	1,16	**PHC 12B-1SB...**
C2050-1SB	31,75	10,16	9,40	5,08	21,3	22,6	15,0	2,03	2,03	800	21,8	24,1	0,84	**PHC C2050-1SB...**

Standard lengths are 10 ft. and 5 m. To complete designation, add chain length. For example, a 5 m box of 60-1SB is PHC 60-1SBX5MTR.
One connecting link is contained per chain. For additional links, add "C/L" for "connecting" and "O/L" for "offset" to the designation.

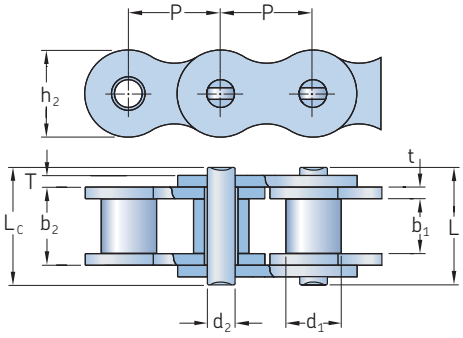

SKF Xtra Performance SLR Chains

Chain number	Dimensions Pitch P	Roller diameter d_1 Max.	Width between inner plates b_1 Min.	Width between outer plates b_2 Min.	Pin diameter d_2 Max.	Pin length L Max.	L_c Max.	Inner plate height h_2 Max.	Plate thickness t Max.	T Max.	Ultimate tensile strength Q Min.	Mass per meter	Designation
–	mm										kN	kg/m	–
08B-1SLR	12,70	8,51	7,75	13,03	4,45	16,7	18,2	11,8	1,60	1,60	18,0	0,69	**PHC 08B-1SLR...**
10B-1SLR	15,88	10,16	9,65	13,75	5,08	19,5	20,9	14,7	1,70	1,70	22,4	0,93	**PHC 10B-1SLR...**
12B-1SLR	19,05	12,07	11,68	15,75	5,72	22,5	24,2	16,0	1,85	1,85	29,0	1,15	**PHC 12B-1SLR...**
16B-1SLR	25,40	15,88	17,02	27,50	8,28	36,1	37,4	21,0	4,15	3,10	60,0	2,71	**PHC 16B-1SLR...**
12B-2SLR	19,05	12,07	11,68	35,21	5,72	42,0	43,6	16,0	1,85	1,85	58,0	2,31	**PHC 12B-2SLR...**
16B-2SLR	25,40	15,88	17,02	57,46	8,28	68,0	69,3	21,0	4,15	3,10	106,0	5,42	**PHC 16B-2SLR...**
40-1SLR	12,70	7,95	7,85	12,25	3,96	16,6	17,8	12,0	1,50	1,50	14,1	0,62	**PHC 40-1SLR...**
50-1SLR	15,88	10,16	9,40	13,84	5,08	20,7	22,2	15,1	2,03	2,03	21,8	1,02	**PHC 50-1SLR...**
60-1SLR	19,05	11,91	12,57	19,35	5,94	27,5	29,3	18,0	2,42	2,42	34,2	1,65	**PHC 60-1SLR...**
80-1SLR	25,40	15,88	15,75	22,66	7,92	32,7	35,0	24,0	3,25	3,25	56,7	2,60	**PHC 80-1SLR...**
100-1SLR	31,75	19,05	18,90	27,51	9,53	40,4	44,7	30,0	4,00	4,00	86,7	3,94	**PHC 100-1SLR...**
60-2SLR	19,05	11,91	12,57	42,13	5,94	50,3	52,1	18,0	3,25	2,42	68,4	3,21	**PHC 60-2SLR...**

Standard lengths are 10 ft. and 5 m. To complete designation, add chain length. For example, a 10 ft. box of 10B-1SLR is PHC 10B-1SLRX10FT.
One connecting link is contained per chain. For additional links, add "C/L" for "connecting" and "O/L" for "offset" to the designation.

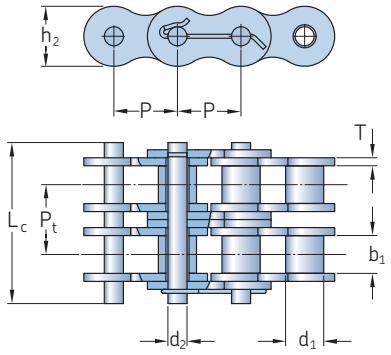

Chain number	ANSI Chain number	Dimensions Pitch P	Roller diameter d_1 Max.	Width between inner plates b_1 Min.	Pin diameter d_2 Max.	Pin length L Max.	Inner plate height h_2 Max.	Plate thickness T Max.	Transverse pitch P_t	Ultimate tensile strength Q Min.	Mass per meter	Designation
–	–	mm								kN	kg/m	–
16S-1	**80-1**	25,40	15,88	15,75	7,92	37,55	24,1	3,25	–	55,6	2,60	**PHC 16S-1...**
20S-1	**100-1**	31,75	19,05	18,90	9,53	44,30	30,0	4,00	–	86,9	3,91	**PHC 20S-1...**
24S-1	**120-1**	38,10	22,23	25,22	11,10	54,40	36,2	4,80	–	125,1	5,62	**PHC 24S-1...**
28S-1	**140-1**	44,45	25,40	25,22	12,70	59,00	42,2	5,60	–	170,3	7,50	**PHC 28S-1...**
32S-1	**160-1**	50,80	28,58	31,55	14,27	69,60	48,2	6,40	–	222,4	10,10	**PHC 32S-1...**
36S-1	**180-1**	57,15	35,71	35,48	17,46	78,60	54,3	7,20	–	281,5	13,45	**PHC 36S-1...**
40S-1	**200-1**	63,50	39,68	37,85	19,85	87,20	60,3	8,00	–	347,5	16,15	**PHC 40S-1...**
16S-2	**80-2**	25,40	15,88	15,75	7,92	66,80	24,1	3,25	29,29	111,2	5,15	**PHC 16S-2...**
20S-2	**100-2**	31,75	19,05	18,90	9,53	80,50	30,1	4,00	35,76	173,7	7,80	**PHC 20S-2...**
24S-2	**120-2**	38,10	22,23	25,22	11,10	99,70	36,2	4,80	45,44	250,2	11,70	**PHC 24S-2...**
28S-2	**140-2**	44,45	25,40	25,22	12,70	107,80	42,2	5,60	48,87	340,5	15,14	**PHC 28S-2...**
32S-2	**160-2**	50,80	28,58	31,55	14,27	127,50	48,2	6,40	58,55	444,8	20,14	**PHC 32S-2...**
36S-2	**180-2**	57,15	35,71	35,48	17,46	144,40	54,3	7,20	65,84	562,9	29,22	**PHC 36S-2...**
40S-2	**200-2**	63,50	39,68	37,85	19,85	158,80	60,3	8,00	71,55	695,0	32,24	**PHC 40S-2...**
16S-3	**80-3**	25,40	15,88	15,75	7,92	96,10	24,1	3,25	29,29	166,8	7,89	**PHC 16S-3...**
20S-3	**100-3**	31,75	19,05	18,90	9,53	116,30	30,1	4,00	35,76	260,6	11,77	**PHC 20S-3...**
24S-3	**120-3**	38,10	22,23	25,22	11,10	145,20	36,2	4,80	45,44	375,3	17,53	**PHC 24S-3...**
28S-3	**140-3**	44,45	25,40	25,22	12,70	156,80	42,2	5,60	48,87	510,8	22,20	**PHC 28S-3...**
32S-3	**160-3**	50,80	28,58	31,55	14,27	186,60	48,2	6,40	58,55	667,2	30,02	**PHC 32S-3...**
36S-3	**180-3**	57,15	35,71	35,48	17,46	210,20	54,3	7,20	65,84	844,4	38,22	**PHC 36S-3...**
40S-3	**200-3**	63,50	39,68	37,85	19,85	230,40	60,3	8,00	71,55	1 042,5	49,03	**PHC 40S-3...**
16S-4	**80-4**	25,40	–	15,75	7,92	122,90	24,1	3,25	29,29	222,4	10,24	**PHC 16S-4...**
20S-4	**100-4**	31,75	19,05	18,90	9,53	151,50	30,1	4,00	35,76	347,5	15,39	**PHC 20S-4...**
24S-4	**120-4**	38,10	22,23	25,22	11,10	190,60	36,2	4,80	45,44	500,4	22,19	**PHC 24S-4...**
28S-4	**140-4**	44,45	25,40	25,22	12,70	205,70	42,2	5,60	48,87	681,1	29,63	**PHC 28S-4...**
32S-4	**160-4**	50,80	28,58	31,55	14,27	245,20	48,2	6,40	58,55	889,6	39,94	**PHC 32S-4...**
40S-4	**200-4**	63,50	39,68	37,85	19,85	302,00	60,3	8,00	71,55	1 390,0	63,60	**PHC 40S-4...**
16S-5	**80-5**	25,40	–	15,75	7,92	152,20	24,1	3,25	29,29	278,0	12,79	**PHC 16S-5...**
20S-5	**100-5**	31,75	19,05	18,90	9,53	187,80	30,1	4,00	35,76	434,4	19,22	**PHC 20S-5...**
24S-5	**120-5**	38,10	22,23	25,22	11,10	236,10	36,2	4,80	45,44	625,5	27,71	**PHC 24S-5...**
16S-6	**80-6**	25,40	15,88	15,75	7,92	181,50	24,1	3,25	29,29	333,6	15,34	**PHC 16S-6...**
20S-6	**100-6**	31,75	19,05	18,90	9,53	223,60	30,1	4,00	35,76	521,2	23,05	**PHC 20S-6...**
24S-6	**120-6**	38,10	22,23	25,22	11,10	281,60	36,2	4,80	45,44	750,6	33,24	**PHC 24S-6...**
28S-6	**140-6**	44,45	25,40	25,22	12,70	303,40	42,2	5,60	48,87	1 021,6	44,38	**PHC 28S-6...**
32S-6	**160-6**	50,80	28,58	31,55	14,27	362,30	48,2	6,40	58,55	1 334,4	59,83	**PHC 32S-6...**
40S-6	**200-6**	63,50	39,68	37,85	19,85	445,00	60,3	8,00	71,55	2 085,0	95,23	**PHC 40S-6...**
16S-8	**80-8**	25,40	15,88	15,75	7,92	240,10	24,1	3,25	29,29	444,8	20,44	**PHC 16S-8...**
20S-8	**100-8**	31,75	19,05	18,90	9,53	295,10	30,1	4,00	35,76	695,0	30,71	**PHC 20S-8...**
24S-8	**120-8**	38,10	22,23	25,22	11,10	372,40	36,2	4,80	45,44	1 000,8	44,28	**PHC 24S-8...**

Standard lengths are 10 ft. To complete designation, add chain length. For example, a 10 ft. box of 40S-6 is PHC 40S-6X10FT.
One connecting link is contained per chain. For additional links, add "C/L" for "connecting" and "O/L" for "offset" to the designation.

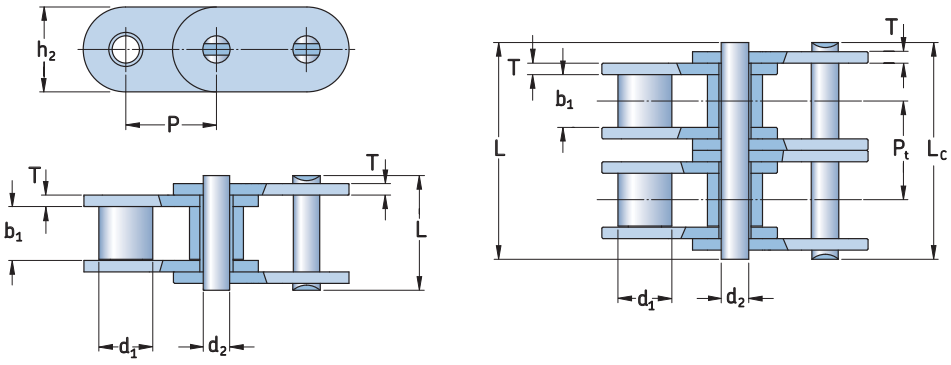

Series	DIN/ISO Chain number	ANSI Chain number	Dimensions Pitch P	Roller diameter d_1 Max.	Width between inner plates b_1 Min.	Pin diameter d_2 Max.	Pin length L Max.	Lc Max.	Inner plate height h_2 Max.	Plate thickness t Max.	T Max.	Transverse pitch P_t	Ultimate tensile strength Q Min.	Average tensile strength Q_0	Mass per meter q	Designation
–	–	–	mm										kN		kg/m	–
A	C06A-1	*C35	9,525	5,08	4,77	3,58	13,3	14,3	9,0	–	1,3	–	7,9	10,8	0,41	**PHC C35-1...**
	C08A-1	C40	12,700	7,95	7,85	3,96	16,6	18,8	12,0	–	1,5	–	14,1	17,5	0,73	**PHC C40-1...**
	C10A-1	C50	15,875	10,16	9,40	5,08	20,7	23,3	15,1	–	2,0	–	22,2	29,4	1,23	**PHC C50-1...**
	C12A-1	C60	19,050	11,91	12,57	5,94	–	28,3	18,0	–	2,4	–	31,8	41,5	1,81	**PHC C60-1...**
	C16A-1	C80	25,400	15,88	15,75	7,92	32,7	36,5	24,0	–	3,3	–	56,7	60,4	3,09	**PHC C80-1...**
	C20A-1	C100	31,750	19,05	18,90	9,53	40,4	44,7	30,0	–	4,0	–	88,5	109,2	4,56	**PHC C100-1...**
	C24A-1	C120	38,100	22,23	25,22	11,10	50,3	54,3	35,7	–	4,8	–	127,0	166,3	6,86	**PHC C120-1...**
	C28A-1	C140	44,450	25,40	25,22	12,70	54,4	59,0	41,0	–	5,6	–	172,4	212,0	8,49	**PHC C140-1...**
	C32A-1	C160	50,800	28,58	31,55	14,27	64,8	69,6	47,8	–	6,4	–	226,8	278,9	11,50	**PHC C160-1...**
	C08A-2	C40-2	12,700	7,95	7,85	3,96	31,0	33,2	12,0	–	1,5	14,38	28,2	35,9	1,43	**PHC C40-2...**
	C10A-2	C50-2	15,875	10,16	9,40	5,08	38,9	41,4	15,1	–	2,0	18,11	44,4	58,1	2,42	**PHC C50-2...**
	C12A-2	C60-2	19,050	11,91	12,57	5,94	48,8	51,1	18,0	–	2,4	22,78	63,6	82,1	3,58	**PHC C60-2...**
	C16A-2	C80-2	25,400	15,88	15,75	7,92	62,7	65,8	24,0	–	3,3	29,29	113,4	141,8	6,12	**PHC C80-2...**
	C20A-2	C100-2	31,750	19,05	18,90	9,53	76,4	80,5	30,0	–	4,0	35,76	177,0	219,4	9,08	**PHC C100-2...**
	C34A-2	C120-2	38,100	22,23	25,22	11,10	95,8	99,7	35,7	–	4,8	45,44	254,0	314,9	13,60	**PHC C120-2...**
	C28A-2	C 140-2	44,450	25,40	25,22	12,70	103,3	107,9	41,0	–	5,6	48,87	344,8	427,5	16,86	**PHC C140-2...**
	C32A-2	C 180-2	50,800	28,58	31,55	14,27	123,3	128,1	47,8	–	6,4	58,55	453,6	562,4	22,90	**PHC C180-2...**
	C08A-3	C40-3	12,700	7,95	7,85	3,96	45,4	47,6	12,0	–	1,5	14,38	42,3	50,0	2,14	**PHC C40-3...**
	C10A-3	C50-3	15,875	10,16	9,40	5,08	57,0	59,5	15,1	–	2,0	18,11	66,6	77,8	3,62	**PHC C50-3...**
	C12A-3	C60-3	19,050	11,91	12,57	5,94	71,5	73,9	18,0	–	2,4	22,78	95,4	111,1	5,36	**PHC C60-3...**
	C16A-3	C80-3	25,400	15,88	15,75	7,92	91,7	95,1	24,0	–	3,3	29,29	170,1	198,4	9,10	**PHC C80-3...**
	C20A-3	C100-3	31,750	19,05	18,90	9,53	112,2	116,3	30,0	–	4,0	35,76	265,5	309,6	13,60	**PHC C100-3...**
	C24A-3	C120-3	38,100	22,23	25,22	11,10	141,4	145,2	35,7	–	4,8	45,44	381,0	437,2	20,43	**PHC C120-3...**
	C2BA-3	C140-3	44,450	25,40	25,22	1270,00	152,2	156,8	41,0	–	5,6	48,87	517,2	593,3	25,23	**PHC C140-3...**
	C32A-3	C160-3	50,800	28,58	31,55	1427,00	181,8	186,6	47,8	–	6,4	58,55	680,4	780,6	34,49	**PHC C160-3...**
B	C08B-1	–	12,700	8,51	7,75	4,45	16,7	18,2	11,8	1,6	1,6	–	18,0	19,5	0,80	**PHC C08B-1...**
	C10B-1	–	15,880	10,16	9,65	5,08	19,5	20,9	14,7	1,7	1,7	–	22,4	27,9	1,06	**PHC C10B-1...**
	C12B-1	–	19,060	12,07	11,68	5,72	22,5	25,2	16,0	1,9	1,9	–	29,0	32,2	1,32	**PHC C12B-1...**
	C16B-1	–	25,400	15,88	17,02	8,28	36,1	39,1	21,0	4,2	3,1	–	60,0	72,8	3,08	**PHC C16B-1...**
	C20B-1	–	31,750	19,05	19,56	10,19	41,3	45,0	26,4	4,5	3,5	–	95,0	106,7	4,16	**PHC C20B-1...**
	C24B-1	–	38,100	25,40	25,40	14,63	53,4	57,8	33,2	6,0	4,8	–	160,0	178,0	7,47	**PHC C24B-1...**
	C28B-1	–	44,450	27,94	30,99	15,90	66,1	69,5	36,7	7,5	6,0	–	200,0	222,0	9,90	**PHC C28B-1...**
	C32B-1	–	50,800	29,21	30,99	17,81	66,0	71,0	42,0	7,0	6,0	–	250,0	277,5	10,45	**PHC C32B-1...**
	C08B-2	–	12,700	8,51	7,75	4,45	31,2	32,2	11,8	1,6	1,6	13,92	32,0	38,7	1,45	**PHC C08B-2...**
	C10B-2	–	15,880	10,16	9,65	5,08	36,1	37,5	14,7	1,7	1,7	16,59	44,5	57,8	2,00	**PHC C10B-2...**
	C12B-2	–	19,050	12,07	11,68	5,72	42,0	44,7	16,0	1,9	1,9	19,46	57,8	66,1	2,62	**PHC C12B-2...**
	C16B-2	–	25,400	15,88	17,02	8,28	68,0	71,0	21,0	4,2	3,1	31,88	106,0	133,0	6,10	**PHC C16B-2...**
	C20B-2	–	31,750	19,05	19,56	10,19	77,8	81,5	26,4	4,5	3,5	36,45	170,0	211,2	8,23	**PHC C20B-2...**
	C24B-2	–	38,100	25,40	25,40	14,63	101,7	106,2	33,2	6,0	4,8	48,36	280,0	319,2	14,77	**PHC C24B-2...**
	C28B-2	–	44,450	27,94	30,99	15,90	124,6	129,1	36,7	7,5	6,0	59,56	360,0	406,8	19,82	**PHC C28B-2...**
	C32B-2	–	50,800	29,21	30,99	17,81	124,6	129,6	42,0	7,0	6,0	58,65	450,0	508,5	20,94	**PHC C32B-2...**
	C08B-3	–	12,700	8,51	7,75	4,45	45,1	46,1	11,8	1,6	1,6	13,92	47,5	57,8	2,10	**PHC C08B-3...**
	C10B-3	–	15,880	10,16	9,65	5,08	52,7	54,1	14,7	1,7	1,7	16,59	66,7	84,5	2,87	**PHC C10B-3...**
	C12B-3	–	19,050	12,07	11,66	5,72	61,5	64,2	16,0	1,9	1,9	19,46	86,7	101,8	3,89	**PHC C12B-3...**
	C16B-3	–	25,400	15,88	17,02	8,28	99,8	102,9	21,0	4,2	3,1	31,88	160,0	203,7	9,12	**PHC C16B-3...**
	C20B-3	–	31,750	19,05	19,56	10,19	114,2	117,9	26,4	4,5	3,5	36,45	250,0	290,0	11,34	**PHC C20B-3...**
	C24B-3	–	38,100	25,40	25,40	14,63	150,1	154,6	33,2	6,0	4,8	48,36	425,0	493,0	22,10	**PHC C24B-3...**
	C28B-3	–	44,450	27,94	30,99	15,90	184,2	188,7	36,7	7,5	6,0	59,56	530,0	609,5	29,64	**PHC C28B-3...**
	C32B-3	–	50,800	29,21	30,99	17,81	183,2	188,2	42,0	7,0	6,0	58,55	670,0	770,5	31,27	**PHC C32B-3...**

* Bushing chain: d_1 in the table indicates the external diameter of the bushing.
Standard lengths are 10 ft. and 5 m. To complete designation, add chain length. For example, a 10 ft. box of C08A-1 is PHC C08A-1X10FT.
One connecting link is contained per chain. For additional links, add "C/L" for "connecting" and "O/L" for "offset" to the designation.

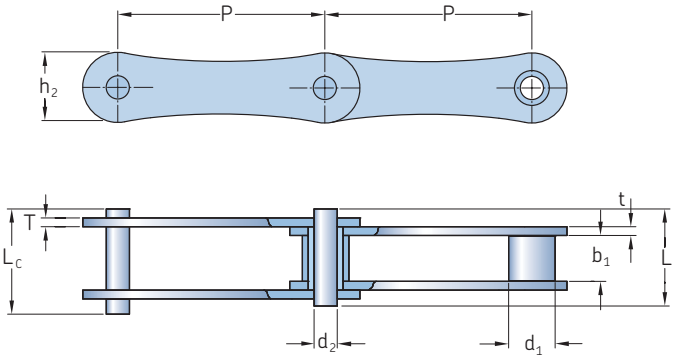

ANSI Chain number	BS/ISO Chain number	Dimensions Pitch P	Roller diameter d_1 Max.	Width between inner plates b_1 Min.	Pin diameter d_2 Max.	Pin length L Max.	L_c Max.	Inner plate height h_2 Max.	Plate thickness t Max.	T Max.	Ultimate tensile strength Q Min.	Average tensile strength Q_0	Mass per meter	Designation
–	–	mm									kN		kg/m	–
2040	**208A**	25,40	7,95	7,85	3,96	16,6	17,8	12,0	1,50	1,50	14,1	16,7	0,42	**PHC 2040...**
2050	**210A**	31,75	10,16	9,40	5,08	20,7	22,2	15,0	2,03	2,03	22,2	28,1	0,73	**PHC 2050...**
2060	**212A**	38,10	11,91	12,57	5,94	25,9	27,7	18,0	2,42	2,42	31,8	36,8	1,02	**PHC 2060...**
2080	**216A**	50,80	15,88	15,75	7,92	32,7	36,5	24,0	3,25	3,25	56,7	65,7	1,70	**PHC 2080...**
2100	**220A**	63,50	19,05	18,90	9,53	40,4	44,7	30,0	4,00	4,00	88,5	102,6	2,55	**PHC 2100...**
2120	**224A**	76,20	22,23	25,22	11,10	50,3	54,3	35,7	4,80	4,80	127,0	147,3	4,06	**PHC 2120...**
–	**208B**	25,40	8,51	7,75	4,45	16,7	18,2	11,8	1,60	1,60	18,0	19,4	0,45	**PHC 208B...**
–	**210B**	31,75	10,16	9,65	5,08	19,5	20,9	14,7	1,70	1,70	22,4	27,5	0,65	**PHC 210B...**
–	**212B**	38,10	12,07	11,68	5,72	22,5	25,2	16,0	1,85	1,85	29,0	32,2	0,76	**PHC 212B...**
–	**216B**	50,80	15,88	17,02	8,28	36,1	39,1	21,0	4,15	3,10	60,0	72,8	1,75	**PHC 216B...**
–	**220B**	63,50	19,05	19,56	10,19	41,3	45,0	26,4	4,50	3,50	95,0	106,7	2,62	**PHC 220B...**
–	**224B**	76,20	25,40	25,40	14,63	53,4	57,8	33,2	6,00	4,80	160,0	178,0	4,70	**PHC 224B...**
–	**228B**	88,90	27,94	30,99	15,90	65,1	69,5	36,7	7,50	6,00	200,0	222,0	6,23	**PHC 228B...**
–	**232B**	101,60	29,21	30,99	17,81	66,0	71,0	42,0	7,00	6,00	250,0	277,5	6,72	**PHC 232B...**

Standard lengths are 10 ft. and 5 m. To complete designation, add chain length. For example, a 5 m box of 2060 is PHC 2060X5MTR.
One connecting link is contained per chain. For additional links, add "C/L" for "connecting" and "O/L" for "offset" to the designation.

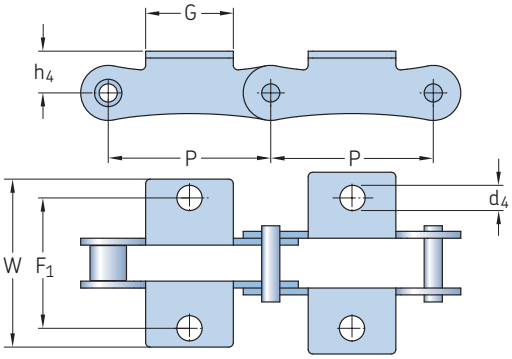

K-1

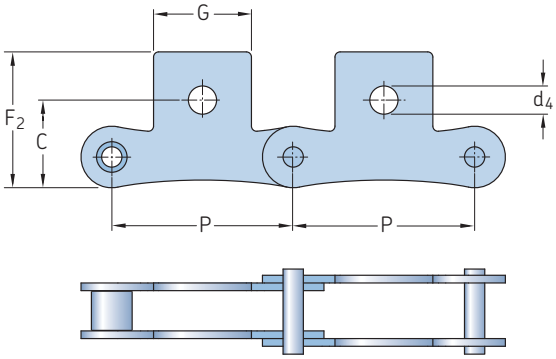

SK-1

ANSI Chain number	BS/ISO Chain number	Dimensions Pitch P	G	F1	W	h_4	d_4	C	F_2	d_5	Designation
–	–	mm									–
2040	**208A**	25,40	19,1	25,4	39,6	9,1	3,4	11,1	20,5	5,5	**PHC 2040...**
2050	**210A**	31,75	23,8	31,8	49,0	11,1	5,5	14,3	25,0	6,6	**PHC 2050...**
2060	**212A**	38,10	28,6	42,9	67,8	14,7	5,5	17,5	32,9	9,2	**PHC 2060...**
2080	**216A**	50,80	38,1	55,6	87,8	19,1	6,8	22,2	43,5	11,0	**PHC 2080...**
2100	**220A**	63,50	47,6	66,6	107,5	23,4	9,2	28,6	50,4	13,0	**PHC 2100...**
2120	**224A**	76,20	57,2	79,3	121,4	27,8	10,5	33,3	55,5	15,0	**PHC 2120...**
–	**208B**	25,40	23,2	25,4	39,6	9,1	4,5	11,1	20,5	5,5	**PHC 208B...**
–	**210B**	31,75	23,8	31,8	49,0	11,1	5,5	–	–	–	**PHC 210B...**
–	**212B**	38,10	35,0	38,1	57,0	14,7	6,6	–	–	–	**PHC 212B...**
–	**216B**	50,80	44,0	50,8	84,0	19,1	6,6	–	–	–	**PHC 216B...**
–	**220B**	63,50	52,0	63,5	104,0	23,4	8,4	–	–	–	**PHC 220B...**
–	**224B**	76,20	60,0	76,2	120,0	27,8	10,5	–	–	–	**PHC 224B...**

To complete designation, add attachment spacing and type followed by chain length. For example, PHC 2060-L1K1X10FT (2060 chain with K-1 attachment on every link, 10 ft. length).
Note: Also available in stainless steel. When ordering, add SS after the chain number. For example, PHC 2060SS-L1K1X10FT.

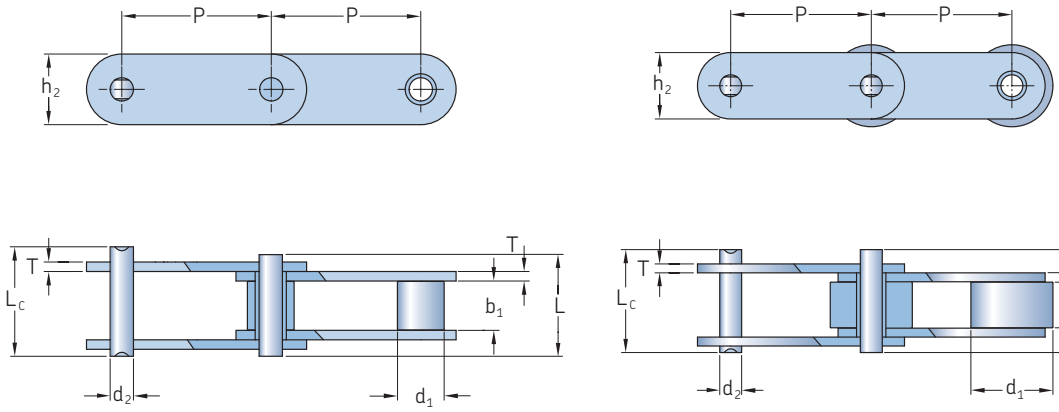

Small roller type

Large roller type

ANSI Chain number	BS/ISO Chain number	Dimensions Pitch P	Roller diameter d_1 Max.	Width between inner plates b_1 Max.	Pin diameter d_2 Max.	Pin length L Max.	L_c Max.	Inner plate height h_2 Max.	Plate thickness T Max.	Ultimate tensile strength Q Min.	Average tensile strength Q_0	Mass per meter	Designation
–	–	mm								kN		kg/m	–
C2040	**C208A**	25,40	7,95	7,85	3,96	16,6	17,8	12,0	1,50	14,1	16,7	0,50	**PHC C2040...**
C2042	**C208AL**	25,40	15,88	7,85	3,96	16,6	17,8	12,0	1,50	14,1	16,7	0,84	**PHC C2042...**
C2040H	**C208AH**	25,40	7,95	7,85	3,96	18,8	19,9	12,0	2,03	14,1	17,2	0,65	**PHC C2040H...**
C2050	**C210A**	31,75	10,16	9,40	5,08	20,7	22,2	15,0	2,03	22,2	28,1	0,78	**PHC C2050...**
C2052	**C210AL**	31,75	19,05	9,40	5,08	20,7	22,2	15,0	2,03	22,2	28,1	1,27	**PHC C2052...**
C2060	**C212A**	38,10	11,91	12,57	5,94	25,9	27,7	18,0	2,42	31,8	36,8	1,12	**PHC C2060...**
C2062	**C212AL**	38,10	22,23	12,57	5,94	25,9	27,7	18,0	2,42	31,8	36,8	1,61	**PHC C2062...**
C2060H	**C212AH**	38,10	11,91	12,57	5,94	29,2	31,6	18,0	3,25	31,8	41,6	1,44	**PHC C2060H...**
C2062H	**C212AHL**	38,10	22,23	12,57	5,94	29,2	31,6	18,0	3,25	31,8	41,6	2,07	**PHC C2062H...**
C2080	**C216A**	50,80	15,88	15,75	7,92	32,7	36,5	24,0	3,25	56,7	65,7	2,08	**PHC C2080...**
C2082	**C216AL**	50,80	28,58	15,75	7,92	32,7	36,5	24,0	3,25	56,7	65,7	3,12	**PHC C2082...**
C2080H	**C216AH**	50,80	15,88	15,75	7,92	36,2	39,4	24,0	4,00	56,7	70,0	2,54	**PHC C2080H...**
C2082H	**C216AHL**	50,80	28,58	15,75	7,92	36,2	39,4	24,0	4,00	56,7	70,0	3,58	**PHC C2082H...**
C2100	**C220A**	63,50	19,05	18,90	9,53	40,4	44,7	30,0	4,00	88,5	102,6	3,01	**PHC C2100...**
C2102	**C220AL**	63,50	39,67	18,90	9,53	40,4	44,7	30,0	4,00	88,5	102,6	4,83	**PHC C2102...**
C2100H	**C220AH**	63,50	19,05	18,90	9,53	43,6	46,9	30,0	4,80	88,5	112,4	3,56	**PHC C2100H...**
C2102H	**C220AHL**	63,50	39,67	18,90	9,53	43,6	46,9	30,0	4,80	88,5	112,4	5,38	**PHC C2102H...**
C2120	**C224A**	76,20	22,23	25,22	11,10	50,3	54,3	35,7	4,80	127,0	147,3	4,66	**PHC C2120...**
C2122	**C224AL**	76,20	44,45	25,22	11,10	50,3	54,3	35,7	4,80	127,0	147,3	7,66	**PHC C2122...**
C2120H	**C224AH**	76,20	22,23	25,22	11,10	53,5	57,5	35,7	5,60	127,0	160,9	5,26	**PHC C2120H...**
C2122H	**C224AHL**	76,20	44,45	25,22	11,10	53,5	57,5	35,7	5,60	127,0	160,9	8,26	**PHC C2122H...**
C2160	**C232A**	101,60	28,58	31,75	14,27	64,8	69,6	47,8	6,40	226,8	278,9	8,15	**PHC C2160...**
C2162	**C232AL**	101,60	57,15	31,75	14,27	64,8	69,6	47,8	6,40	226,8	278,9	13,00	**PHC C2162...**
C2160H	**C232AH**	101,60	28,58	31,75	14,27	68,2	73,0	47,8	7,20	226,8	285,8	9,06	**PHC C2160H...**
C2162H	**C232AHL**	101,60	57,15	31,75	14,27	68,2	73,0	47,8	7,20	226,8	285,8	12,77	**PHC C2162H...**

Standard lengths are 10 ft. and 5 m. To complete designation, add chain length. For example, a 5 m box of 2060-1 is PHC C2060X5MTR.
For ordering a special roller type add letter after pitch size (s for small rollers and p for large rollers). For example, to order C2040 with 25,40 mm pitch with small rollers in 10 ft. length, use designation PHC C2040-25.4SX10FT.
One connecting link is contained per chain. For additional links, add "C/L" for "connecting" and "O/L" for "offset" to the designation.

Conveyor chain C series attachments

A-1 | A-2 | K-1 | K-2 | AA-1 | AA-2 | KK-1 | KK-2

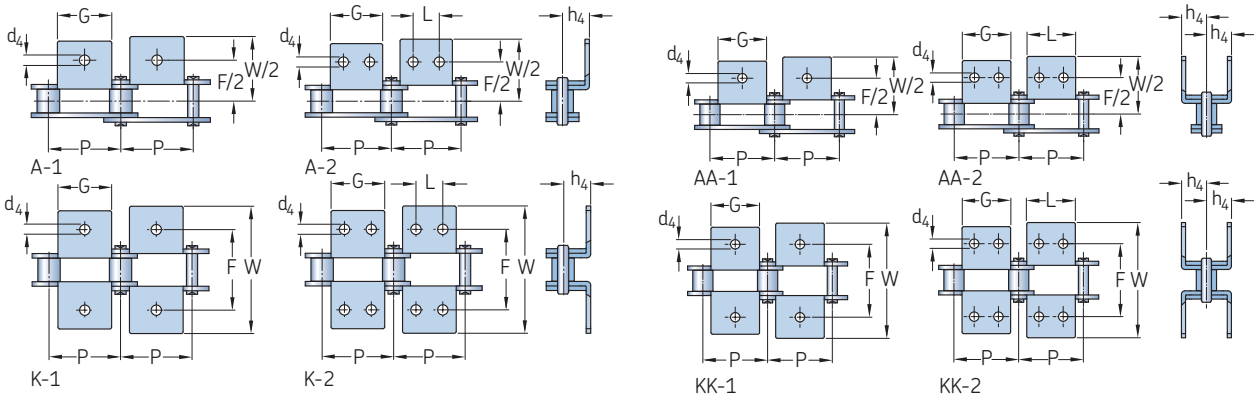

ANSI Chain number	BS/ISO Chain number	Dimensions P	G	L	F	W	h_4	d_4	Designation
–	–	mm							–
C2040*	**C208A**	25,4	19,1	9,5	25,4	39,6	9,1	3,4	**PHC C2040...**
C2042*	**C208AL**	25,4	19,1	9,5	25,4	39,6	9,1	3,4	**PHC C2042...**
C2050*	**C210A**	31,8	23,8	11,9	31,8	49,0	11,1	5,5	**PHC C2050...**
C2052*	**C210AL**	31,8	23,8	11,9	31,8	49,0	11,1	5,5	**PHC C2052...**
C2060*	**C212A**	38,1	28,6	14,3	42,9	67,8	14,7	5,5	**PHC C2060...**
C2062*	**C212AL**	38,1	28,6	14,3	42,9	67,8	14,7	5,5	**PHC C2062...**
C2060H*	**C212AH**	38,1	28,6	14,3	42,9	67,8	14,7	5,5	**PHC C2060H...**
C2062H*	**C212AHL**	38,1	28,6	14,3	42,9	67,8	14,7	5,5	**PHC C2062H...**
C2080*	**C216A**	50,8	38,1	19,1	55,6	87,8	19,1	6,8	**PHC C2080...**
C2082*	**C216AL**	50,8	38,1	19,1	55,6	87,8	19,1	6,8	**PHC C2082...**
C2080H*	**C216AH**	50,8	38,1	19,1	55,6	87,8	19,1	6,8	**PHC C2080H...**
C2082H*	**C216AHL**	50,8	38,1	19,1	55,6	87,8	19,1	6,8	**PHC C2082H...**
C2100	**C220A**	63,5	47,6	23,8	66,6	107,5	23,4	9,2	**PHC C2100...**
C2102	**C220AL**	63,5	47,6	23,8	66,6	107,5	23,4	9,2	**PHC C2102...**
C2100H	**C220AH**	63,5	47,6	23,8	66,6	107,5	23,4	9,2	**PHC C2100H...**
C2102H	**C220AHL**	63,5	47,6	23,8	66,6	107,5	23,4	9,2	**PHC C2102H...**
C2120	**C224A**	76,2	57,2	28,6	79,3	121,4	27,8	11,0	**PHC C2120...**
C2122	**C224AL**	76,2	57,2	28,6	79,3	121,4	27,8	11,0	**PHC C2122...**
C2120H	**C224AH**	76,2	57,2	28,6	79,3	121,4	27,8	11,0	**PHC C2120H...**
C2122H	**C224AHL**	76,2	57,2	28,6	79,3	121,4	27,8	11,0	**PHC C2122H...**
C2160	**C232A**	101,6	76,2	38,1	104,7	151,6	36,5	13,1	**PHC C2160...**
C2162	**C232AL**	101,6	76,2	38,1	104,7	151,6	36,5	13,1	**PHC C2162...**
C2160H	**C232AH**	101,6	76,2	38,1	104,7	151,6	36,5	13,1	**PHC C2160H...**
C2162H	**C232AHL**	101,6	76,2	38,1	104,7	151,6	36,5	13,1	**PHC C2162H...**

* For these chains AA-1, AA-2, KK-1 and KK-2 attachments are available.
To complete designation, add attachment spacing and type followed by chain length. For example, PHC C2060-L2A1X10FT (C2060 with A-1 attachment on every second link, 10 ft. length).
Note: Also available in stainless steel. When ordering, add SS after the chain number. For example, PHC C2060SS-L2A1X10FT.

Conveyor chain C series attachments

SA-1 | SA-2 | SK-1 | SK-2

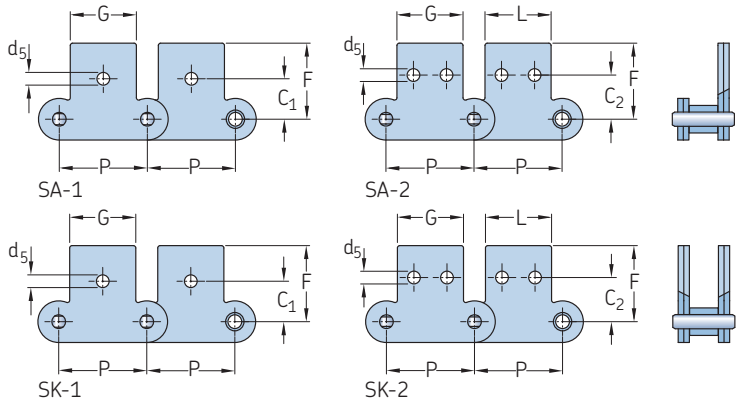

ANSI Chain number	BS/ISO Chain number	Dimensions								Designation
		P	G	L	C_1	C_2	F	d_4	d_5	
–	–	mm								–
C2040	**C208A**	25,4	19,1	9,5	11,1	13,5	20,5	3,4	5,5	**PHC C2040...**
C2042	**C208AL**	25,4	19,1	9,5	11,1	13,5	20,5	3,4	5,5	**PHC C2042...**
C2050	**C210A**	31,8	23,8	11,9	14,3	15,9	25,0	5,5	6,6	**PHC C2050...**
C2052	**C210AL**	31,8	23,8	11,9	14,3	15,9	25,0	5,5	6,6	**PHC C2052...**
C2060	**C212A**	38,1	28,6	14,3	17,5	19,1	32,9	5,5	9,2	**PHC C2060...**
C2062	**C212AL**	38,1	28,6	14,3	17,5	19,1	32,9	5,5	9,2	**PHC C2062...**
C2060H	**C212AH**	38,1	28,6	14,3	17,5	19,1	32,9	5,5	9,2	**PHC C2060H...**
C2062H	**C212AHL**	38,1	28,6	14,3	17,5	19,1	32,9	5,5	9,2	**PHC C2062H...**
C2080	**C216A**	50,8	38,1	19,1	22,2	25,4	43,5	6,6	11,0	**PHC C2080...**
C2082	**C216AL**	50,8	38,1	19,1	22,2	25,4	43,5	6,6	11,0	**PHC C2082...**
C2080H	**C216AH**	50,8	38,1	19,1	22,2	25,4	43,5	6,6	11,0	**PHC C2080H...**
C2082H	**C216AHL**	50,8	38,1	19,1	22,2	25,4	43,5	6,6	11,0	**PHC C2082H...**
C2100	**C220A**	63,5	47,6	23,8	28,6	31,8	50,4	8,4	13,0	**PHC C2100...**
C2102	**C220AL**	63,5	47,6	23,8	28,6	31,8	50,4	8,4	13,0	**PHC C2102...**
C2100H	**C220AH**	63,5	47,6	23,8	28,6	31,8	50,4	8,4	13,0	**PHC C2100H...**
C2102H	**C220AHL**	63,5	47,6	23,8	28,6	31,8	50,4	8,4	13,0	**PHC C2102H...**

To complete designation, add attachment spacing and type followed by chain length. For example, PHC C2060-1-L5SK2X10FT (C2060-1 with SK-2 attachment on every fifth link, 10 ft. length).
Note: Also available in stainless steel. When ordering, add SS after the chain number. For example, PHC C2060-1SS-L5SK2X10FT.

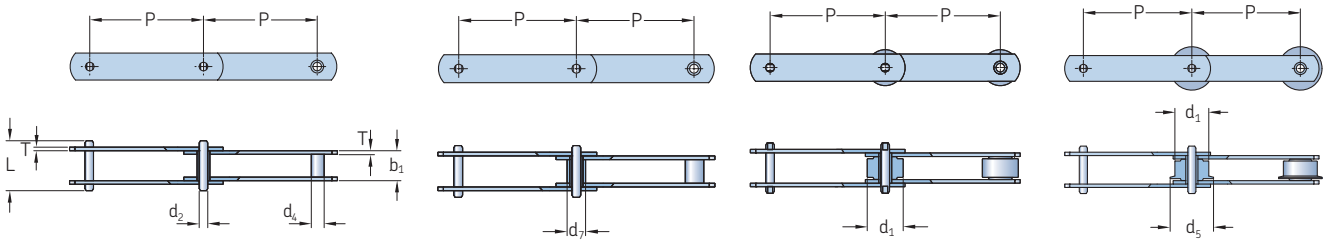

without roller | with S small roller | with P large roller | with F flanged roller

BS/ISO Chain number	Pitch sizes available P													
	mm													
M20	40*	50	63	80	100	125	160	–	–	–	–	–	–	–
M28	–	50*	63	80	100	125	160	200	–	–	–	–	–	–
M40	–	–	63	80	100	125	160	200	250	–	–	–	–	–
M56	–	–	63*	80	100	125	160	200	250	–	–	–	–	–
M80	–	–	–	80	100	125	160	200	250	315	–	–	–	–
M112	–	–	–	80*	100	125	160	200	250	315	400	–	–	–
M160	–	–	–	–	100*	125	160	200	250	315	400	500	–	–
M224	–	–	–	–	–	125*	160	200	250	315	400	500	630	–
M315	–	–	–	–	–	–	160*	200	250	315	400	500	630	–
M450	–	–	–	–	–	–	–	200	250	315	400	500	630	800

* Only available with small roller or without roller.

BS/ISO Chain number	Dimensions Roller diameter d_1 Max.	d_7 Max.	d_5 Max.	Bush diameter d_4 Max.	Width between inner plates b_1 Max.	Pin diameter d_2 Max.	Pin length L Max.	Plate height h_2 Max.	Plate thickness T Max.	Ultimate tensile strength Q Min.	Average tensile strength Q_0	Designation
–	mm									kN		–
M20A	25	12,5	32	9,0	16	6,0	35	19	2,5	20	25,0	**PHC M20A...**
M28A	30	15,0	36	10,0	18	7,0	40	21	3,0	28	35,0	**PHC M28A...**
M40A	36	18,0	42	12,5	20	8,5	45	26	3,5	40	50,0	**PHC M40A...**
M56A	42	21,0	50	15,0	24	10,0	52	31	4,0	56	70,0	**PHC M56A...**
M80A	50	25,0	60	18,0	28	12,0	62	36	5,0	80	100,0	**PHC M80A...**
M112A	60	30,0	70	21,0	32	15,0	73	41	6,0	112	140,0	**PHC M112A...**
M160A	70	36,0	85	25,0	37	18,0	85	51	7,0	160	200,0	**PHC M160A...**
M224A	85	42,0	100	30,0	43	21,0	98	62	8,0	224	280,0	**PHC M224A...**
M315A	100	50,0	120	36,0	48	25,0	112	72	10,0	315	393,7	**PHC M315A...**
M450A	120	60,0	140	42,0	56	30,0	135	82	12,0	450	562,5	**PHC M450A...**

Standard lengths are 10 ft. and 5 m. To complete designation, add pitch size and chain length. For example, to order M20A with 40 mm pitch without roller in 10 ft. length, use designation PHC M20A-40X10FT.
For ordering a special roller type, add letter after pitch size (s for small roller, p for large roller and f for flanged roller). For example, to order M20A with 40 mm pitch with small roller in 10 ft length, use designation PHC M20A-40SX10FT.
One connecting link is contained per chain. For additional links, add "C/L" for "connecting" and "O/L" for "offset" to the designation.
For the complete range of SKF Conveyor Chains available, please refer to the SKF Conveyor Chain Catalogue (PUB PT/P2 10818 EN).

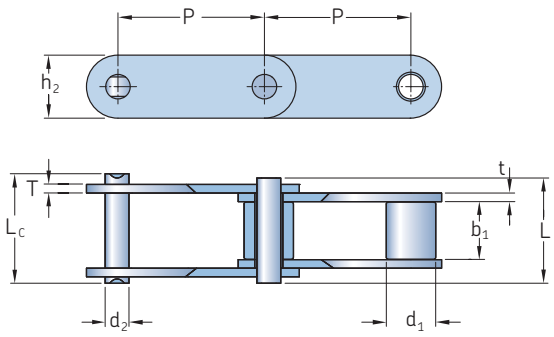

Chain number	Dimensions Pitch P	Roller diameter d_1 Max.	Width between inner plates b_1 Min.	Pin diameter d_2 Max.	Pin length L Max.	L_c Max.	Inner plate height h_2 Max.	Plate thickness t Max.	T Max.	Ultimate tensile strength Q Min.	Average tensile strength Q_0	Mass per meter	Designation
–	mm									kN		kg/m	–
81X	66,27	23,0	27,00	11,10	49,0	53,5	28,50	4,00	4,00	106,7	128,9	3,78	**PHC 81X...**
81XH	66,27	23,0	27,78	11,10	60,7	65,1	31,35	7,94	5,55	151,9	175,7	5,88	**PHC 81XH...**
81XHH	66,27	23,0	27,78	11,10	65,6	70,0	31,35	7,94	7,94	191,1	212,6	6,70	**PHC 81XHH...**
81XHS	66,27	23,0	27,00	11,10	63,6	68,0	31,80	7,60	7,60	152,0	177,2	6,55	**PHC 81XHS...**
500R	50,00	25,4	25,40	14,63	52,0	56,4	40,00	5,00	5,00	100,0	114,5	7,13	**PHC 500R...**
441.100R	100,00	25,4	25,40	14,63	52,0	56,4	40,00	5,00	5,00	100,0	114,5	5,15	**PHC 441.100R...**

Standard lengths are 10 ft. and 5 m. To complete designation, add chain length. For example, a 5 m box of 81X is PHC 81XX5MTR.
One connecting link is contained per chain. For additional links, add "C/L" for "connecting" and "O/L" for "offset" to the designation.

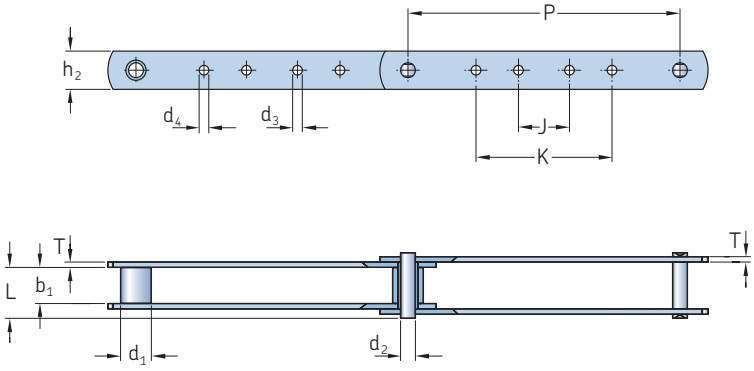

Chain number	Dimensions Pitch P	Roller diameter d_1 Max.	Width between inner plates b_1 Min.	Pin diameter d_2 Max.	Pin length L Max.	Inner plate height h_2 Max.	d_3 Max.	d_4 Max.	J Max.	K Max.	Plate thickness T Max.	Ultimate tensile strength Q Min.	Average tensile strength Q_0	Mass per meter	Designation
–	mm											kN		kg/m	–
3939-B4	203,2	23	27	11,1	49	28,58	7,2	7,2	38,1	101,6	4	115,58	136,5	2,45	**PHC 3939-B4...**
3939-B21	203,2	23	27	11,1	49	28,58	7,2	–	38,1	–	4	115,58	136,5	2,45	**PHC 3939-B21...**
3939-B23	203,2	23	27	11,1	49	28,58	–	10,3	–	92,1	4	115,58	136,5	2,45	**PHC 3939-B23...**
3939-B24	203,2	23	27	11,1	49	28,58	–	7,2	–	101,6	4	115,58	136,5	2,48	**PHC 3939-B24...**
3939-B40	203,2	23	27	11,1	49	28,58	–	10,3	–	101,6	4	115,58	136,5	2,45	**PHC 3939-B40...**
3939-B43	203,2	23	27	11,1	49	28,58	7,2	10,3	38,1	92,1	4	115,58	136,5	2,42	**PHC 3939-B43...**
3939-B44	203,2	23	27	11,1	49	28,58	7,2	10,3	38,1	101,6	4	115,58	136,5	2,45	**PHC 3939-B44...**

Standard lengths are 10 ft. and 5 m. To complete designation, add chain length. For example, a 5 m box of 3939-B4 is PHC 3939-B4X5MTR.
One connecting link is contained per chain. For additional links, add "C/L" for "connecting" and "O/L" for "offset" to the designation.

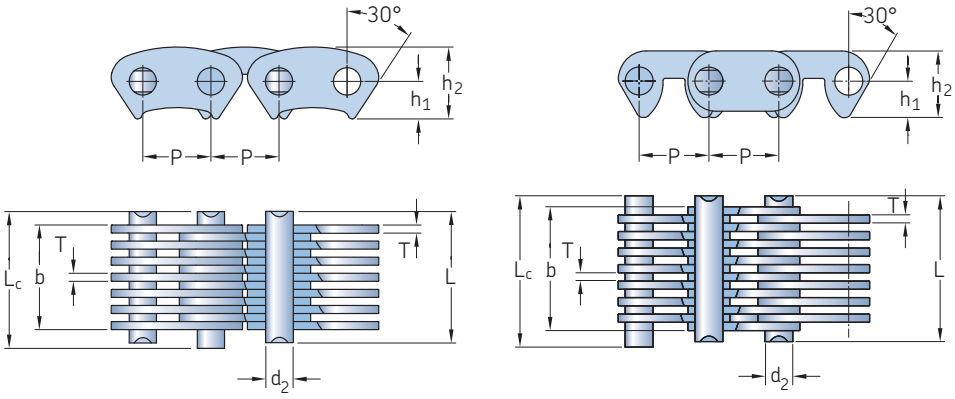

Contact type	Chain number	Dimensions Pitch P	Chain width b Min.	Pin diameter d_2 Max.	Pin length L Max.	Pin length L_c Max.	Distance from hole center to tooth h_1 Max.	Plate height h_2 Max.	Plate thickness T Max.	Guide form	Number of plates	Ultimate tensile strength Q Min.	Average tensile strength Q_0	Mass per meter	Designation
–	–	mm								–	–	kN		kg/m	–
Flank	**CL06-13.5**	9,53	13,5	3,95	18,5	20,0	5,30	10,0	1,5	Outside	9	10,0	11,2	0,60	**PHC CL06-13.5...**
	CL06-16.5	9,53	16,5	3,95	21,5	23,0	5,30	10,0	1,5	Outside	11	12,5	14,0	0,73	**PHC CL06-16.5...**
	CL06-19.5	9,53	19,5	3,95	24,5	26,0	5,30	10,0	1,5	Outside	13	15,0	16,8	0,85	**PHC CL06-19.5...**
	CL06-22.5	9,53	22,5	3,95	27,5	29,0	5,30	10,0	1,5	Outside	15	17,5	19,6	1,00	**PHC CL06-22.5...**
	CL06-28.5	9,53	28,5	3,95	33,5	35,0	5,30	10,0	1,5	Inside	19	22,5	25,2	1,26	**PHC CL06-28.5...**
	CL08-19.5	12,70	19,5	5,08	24,5	26,0	7,00	13,4	1,5	Outside	13	23,4	26,2	1,15	**PHC CL08-19.5...**
	CL08-22.5	12,70	22,5	5,08	27,5	29,0	7,00	13,4	1,5	Outside	15	27,4	30,6	1,33	**PHC CL08-22.5...**
	CL08-25.5	12,70	25,5	5,08	30,5	32,0	7,00	13,4	1,5	Outside	17	31,3	35,0	1,50	**PHC CL08-25.5...**
	CL08-28.5	12,70	28,5	5,08	33,5	35,0	7,00	13,4	1,5	Inside	19	35,2	39,4	1,68	**PHC CL08-28.5...**
	CL08-34.5	12,70	34,5	5,08	39,5	41,0	7,00	13,4	1,5	Inside	23	43,0	48,1	2,04	**PHC CL08-34.5...**
	CL08-40.5	12,70	40,5	5,08	45,5	47,0	7,00	13,4	1,5	Inside	27	50,8	56,8	2,39	**PHC CL08-40.5...**
	CL08-46.5	12,70	46,5	5,08	51,5	53,0	7,00	13,4	1,5	Inside	31	58,6	65,6	2,74	**PHC CL08-46.5...**
	CL08-52.5	12,70	52,5	5,08	57,5	59,0	7,00	13,4	1,5	Inside	35	66,4	74,3	3,10	**PHC CL08-52.5...**
	CL10-30.0	15,88	30,0	5,92	37,0	38,2	8,70	16,7	2,0	Inside	15	45,6	50,6	2,21	**PHC CL10-30.0...**
	CL10-38.0	15,88	38,0	5,92	45,0	46,2	8,70	16,7	2,0	Inside	19	58,6	65,0	2,80	**PHC CL10-38.0...**
	CL10-46.0	15,88	46,0	5,92	53,0	54,2	8,70	16,7	2,0	Inside	23	71,7	79,5	3,39	**PHC CL10-46.0...**
	CL10-54.0	15,88	54,0	5,92	61,0	62,4	8,70	16,7	2,0	Inside	27	84,7	94,0	3,99	**PHC CL10-54.0...**
	CL10-62.0	15,88	62,0	5,92	69,0	70,4	8,70	16,7	2,0	Inside	31	97,7	108,4	4,58	**PHC CL10-62.0...**
	CL12-38.0	19,05	38,0	6,90	45,0	46,5	10,50	20,0	2,0	Inside	19	70,0	77,6	3,37	**PHC CL12-38.0...**
	CL12-46.0	19,05	46,0	6,90	53,0	54,5	10,50	20,0	2,0	Inside	23	86,0	95,4	4,08	**PHC CL12-46.0...**
	CL12-54.0	19,05	54,0	6,90	61,0	62,8	10,50	20,0	2,0	Inside	27	102,0	113,2	4,78	**PHC CL12-54.0...**
	CL12-62.0	19,05	62,0	6,90	69,0	70,8	10,50	20,0	2,0	Inside	31	117,0	129,8	5,50	**PHC CL12-62.0...**
	CL12-70.0	19,05	70,0	6,90	77,0	78,8	10,50	20,0	2,0	Inside	35	133,0	147,6	6,20	**PHC CL12-70.0...**
	CL16-45.0	25,40	45,0	8,90	52,0	53,5	14,00	26,7	3,0	Inside	15	111,0	123,2	5,31	**PHC CL16-45.0...**
	CL16-51.0	25,40	51,0	8,90	58,0	59,5	14,00	26,7	3,0	Inside	17	125,0	138,7	6,02	**PHC CL16-51.0...**
	CL16-57.0	25,40	57,0	8,90	64,0	65,5	14,00	26,7	3,0	Inside	19	141,0	156,5	6,37	**PHC CL16-57.0...**
	CL16-69.0	25,40	69,0	8,90	76,2	77,7	14,00	26,7	3,0	Inside	23	172,0	190,9	8,15	**PHC CL16-69.0...**
	CL16-81.0	25,40	81,0	8,90	88,2	89,7	14,00	26,7	3,0	Inside	27	203,0	225,3	9,57	**PHC CL16-81.0...**
	CL16-93.0	25,40	93,0	8,90	100,2	101,7	14,00	26,7	3,0	Inside	31	235,0	260,8	10,98	**PHC CL16-93.0...**
	CL20-57.0	31,75	57,0	10,84	66,6	69,6	17,50	33,4	3,0	Inside	19	165,0	183,1	8,42	**PHC CL20-57.0...**
	CL20-69.0	31,75	69,0	10,84	78,6	81,6	17,50	33,4	3,0	Inside	23	201,0	223,1	10,19	**PHC CL20-69.0...**
	CL20-81.0	31,75	81,0	10,84	90,6	93,6	17,50	33,4	3,0	Inside	27	237,0	263,2	11,96	**PHC CL20-81.0...**
	CL20-93.0	31,75	93,0	10,84	102,6	105,6	17,50	33,4	3,0	Inside	31	273,0	303,0	13,73	**PHC CL20-93.0...**
	CL20-105.0	31,75	105,0	10,84	114,6	117,6	17,50	33,4	3,0	Inside	35	310,0	341,0	15,50	**PHC CL20-105.0...**
	CL20-117.0	31,75	117,0	10,84	126,6	129,6	17,50	33,4	3,0	Inside	39	346,0	380,6	17,27	**PHC CL20-117.0...**
Crotch	**C4-120**	12,70	19,5	5,08	24,5	26,0	6,62	12,1	1,5	Inside	13	20,0	22,2	1,20	**PHC C4-120...**
	C4-123	12,70	22,5	5,08	27,5	29,0	6,62	12,1	1,5	Inside	15	23,0	25,5	1,37	**PHC C4-123...**
	C4-129	12,70	28,5	5,08	33,5	35,0	6,62	12,1	1,5	Inside	19	28,5	31,6	1,72	**PHC C4-129...**
	C4-132	12,70	31,5	5,08	35,5	38,0	6,62	12,1	1,5	Inside	21	31,5	34,9	1,89	**PHC C4-132...**
	C4-138	12,70	37,5	5,08	42,5	44,0	6,62	12,1	1,5	Inside	25	38,0	42,1	2,22	**PHC C4-138...**
	C4-150	12,70	49,5	5,08	54,5	56,0	6,62	12,1	1,5	Inside	33	50,0	55,5	2,90	**PHC C4-150...**
	C4-320	12,70	19,5	5,08	24,5	26,0	6,62	12,1	1,5	Outside	13	20,0	22,2	1,21	**PHC C4-320...**
	C4-323	12,70	22,5	5,08	27,5	29,0	6,62	12,1	1,5	Outside	15	23,0	25,5	1,38	**PHC C4-323...**
	C4-329	12,70	28,5	5,08	33,5	35,0	6,62	12,1	1,5	Outside	19	28,5	31,6	1,73	**PHC C4-329...**
	C4-332	12,70	31,5	5,08	36,5	38,0	6,62	12,1	1,5	Outside	21	31,5	34,9	1,90	**PHC C4-332...**
	C4-338	12,70	37,5	5,08	42,5	44,0	6,62	12,1	1,5	Outside	25	38,0	42,1	2,23	**PHC C4-338...**

Standard lengths are 10 ft. and 5 m. To complete designation, add chain length. For example, a 5m box of CL06-13.5 is PHC CL06-13.5X5MTR.
One connecting link is contained per chain. For additional links, add "C/L" for "connecting" and "O/L" for "offset" to the designation.

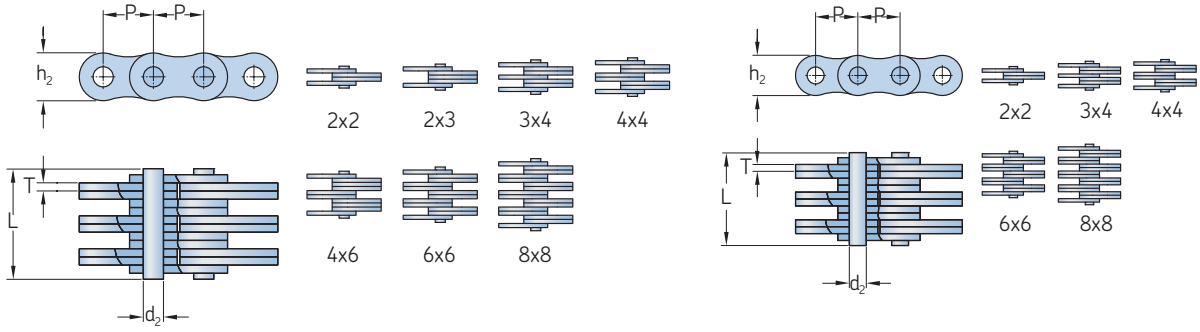

ANSI Chain number	BS/ISO Chain number	Dimensions Pitch P	Plate lacing	Pin diameter d_2 Max.	Pin length L Max.	Plate height h_2 Max.	Plate thickness T Max.	Ultimate tensile strength Q Min.	Average tensile strength Q_0	Mass per meter	Designation
–	–	mm	–	mm				kN		kg/m	–
BL422	**LH0822**	12,70	2 x 2	5,09	11,05	12,07	2,08	22,2	27,6	0,64	**PHC BL422...**
BL423	**LH0823**	12,70	2 x 3	5,09	13,16	12,07	2,08	22,2	27,6	0,80	**PHC BL423...**
BL434	**LH0834**	12,70	3 x 4	5,09	17,40	12,07	2,08	33,4	41,4	1,12	**PHC BL434...**
BL444	**LH0844**	12,70	4 x 4	5,09	19,51	12,07	2,08	44,5	56,0	1,28	**PHC BL444...**
BL446	**LH0846**	12,70	4 x 6	5,09	23,75	12,07	2,08	44,5	56,0	1,60	**PHC BL446...**
BL466	**LH0866**	12,70	6 x 6	5,09	27,99	12,07	2,08	66,7	81,7	1,92	**PHC BL466...**
BL488	**LH0888**	12,70	8 x 8	5,09	36,45	12,07	2,08	89,0	109,4	2,56	**PHC BL488...**
BL522	**LH1022**	15,88	2 x 2	5,96	12,90	15,09	2,44	33,4	43,1	0,88	**PHC BL522...**
BL523	**LH1023**	15,88	2 x 2	5,96	15,37	15,09	2,44	33,4	43,1	1,10	**PHC BL523...**
BL534	**LH1034**	15,88	3 x 4	5,96	20,32	15,09	2,44	48,9	65,6	1,50	**PHC BL534...**
BL544	**LH1044**	15,88	4 x 4	5,96	22,78	15,09	2,44	66,7	84,5	1,80	**PHC BL544...**
BL546	**LH1046**	15,88	4 x 6	5,96	27,74	15,09	2,44	66,7	84,5	2,20	**PHC BL546...**
BL566	**LH1066**	15,88	6 x 6	5,96	32,69	15,09	2,44	100,1	125,1	2,65	**PHC BL566...**
BL588	**LH1088**	15,88	8 x 8	5,96	42,57	15,09	2,44	133,4	169,5	3,50	**PHC BL588...**
BL622	**LH1222**	19,05	2 x 2	7,94	17,37	18,11	3,30	48,9	63,6	1,45	**PHC BL622...**
BL623	**LH1223**	19,05	2 x 3	7,94	20,73	18,11	3,30	48,9	63,6	1,80	**PHC BL623...**
BL634	**LH1234**	19,05	3 x 4	7,94	27,43	18,11	3,30	75,6	102,8	2,50	**PHC BL634...**
BL644	**LH1244**	19,05	4 x 4	7,94	30,78	18,11	3,30	97,9	120,9	2,90	**PHC BL644...**
BL646	**LH1246**	19,05	4 x 6	7,94	37,49	18,11	3,30	97,9	120,9	3,60	**PHC BL646...**
BL666	**LH1266**	19,05	6 x 6	7,94	44,20	18,11	3,30	146,8	190,8	4,30	**PHC BL666...**
BL688	**LH1288**	19,05	8 x 8	7,94	57,61	18,11	3,30	195,7	238,8	5,80	**PHC BL688...**
BL822	**LH1622**	25,40	2 x 2	9,54	21,34	24,13	4,09	84,5	108,2	2,20	**PHC BL822...**
BL823	**LH1623**	25,40	2 x 3	9,54	25,48	24,13	4,09	84,5	108,2	2,70	**PHC BL823...**
BL834	**LH1634**	25,40	3 x 4	9,54	33,76	24,13	4,09	129,0	170,0	3,80	**PHC BL834...**
BL844	**LH1644**	25,40	4 x 4	9,54	37,90	24,13	4,09	169,0	214,6	4,30	**PHC BL844...**
BL846	**LH1646**	25,40	4 x 6	9,54	46,18	24,13	4,09	169,0	214,6	5,40	**PHC BL846...**
BL866	**LH1666**	25,40	6 x 6	9,54	54,46	24,13	4,09	253,6	324,5	6,50	**PHC BL866...**
BL888	**LH1688**	25,40	8 x 8	9,54	71,02	24,13	4,09	338,1	432,7	8,60	**PHC BL888...**
BL1022	**LH2022**	31,75	2 x 2	11,11	25,37	30,18	4,90	115,6	150,8	3,40	**PHC BL1022...**
BL1023	**LH2023**	31,75	2 x 3	11,11	30,33	30,18	4,90	115,6	150,8	4,30	**PHC BL1023...**
BL1034	**LH2034**	31,75	3 x 4	11,11	40,23	30,18	4,90	182,4	231,6	6,00	**PHC BL1034...**
BL1044	**LH2044**	31,75	4 x 4	11,11	45,19	30,18	4,90	231,3	291,4	6,90	**PHC BL1044...**
BL1046	**LH2046**	31,75	4 x 6	11,11	55,09	30,18	4,90	231,3	291,4	8,60	**PHC BL1046...**
BL1066	**LH2066**	31,75	6 x 6	11,11	65,00	30,18	4,90	347,0	430,3	10,30	**PHC BL1066...**
BL1088	**LH2088**	31,75	8 x 8	11,11	84,81	30,18	4,90	462,6	555,1	13,80	**PHC BL1088...**
BL1222	**LH2422**	38,10	2 x 2	12,71	29,62	36,20	5,77	151,2	192,0	4,60	**PHC BL1222...**
BL1223	**LH2423**	38,10	2 x 3	12,71	35,43	36,20	5,77	151,2	192,0	5,80	**PHC BL1223...**
BL1234	**LH2434**	38,10	3 x 4	12,71	47,07	36,20	5,77	244,6	315,9	8,10	**PHC BL1234...**
BL1244	**LH2444**	38,10	4 x 4	12,71	52,88	36,20	5,77	302,5	381,1	9,30	**PHC BL1244...**
BL1246	**LH2446**	38,10	4 x 6	12,71	64,52	36,20	5,77	302,5	381,1	11,60	**PHC BL1246...**
BL1266	**LH2466**	38,10	6 x 6	12,71	76,15	36,20	5,77	453,7	543,6	13,90	**PHC BL1266...**
BL1288	**LH2488**	38,10	8 x 8	12,71	99,42	36,20	5,77	605,0	726,0	18,60	**PHC BL1288...**
BL1422	**LH2822**	44,45	2 x 2	14,29	33,55	42,24	6,55	191,3	225,7	6,10	**PHC BL1422...**
BL1423	**LH2823**	44,45	2 x 3	14,29	40,16	42,24	6,55	191,3	225,7	7,60	**PHC BL1423...**
BL1434	**LH2834**	44,45	3 x 4	14,29	53,37	42,24	6,55	315,8	372,6	10,60	**PHC BL1434...**
BL1444	**LH2844**	44,45	4 x 4	14,29	59,97	42,24	6,55	382,6	451,2	12,20	**PHC BL1444...**
BL1446	**LH2846**	44,45	4 x 6	14,29	73,18	42,24	6,55	382,6	451,2	15,20	**PHC BL1446...**
BL1466	**LH2866**	44,45	6 x 6	14,29	86,39	42,24	6,55	578,3	682,4	18,20	**PHC BL1466...**
BL1488	**LH2888**	44,45	8 x 8	14,29	112,80	42,24	6,55	765,1	902,8	24,30	**PHC BL1488...**
BL1622	**LH3222**	50,80	2 x 2	17,46	39,01	48,26	7,52	289,1	341,1	8,00	**PHC BL1622...**
BL1623	**LH3223**	50,80	2 x 3	17,46	46,58	48,26	7,52	289,1	341,1	10,00	**PHC BL1623...**
BL1634	**LH3234**	50,80	3 x 4	17,46	61,72	48,26	7,52	440,4	519,6	14,00	**PHC BL1634...**
BL1644	**LH3244**	50,80	4 x 4	17,46	69,29	48,26	7,52	573,8	680,4	16,00	**PHC BL1644...**
BL1646	**LH3246**	50,80	4 x 6	17,46	84,43	48,26	7,52	578,3	680,4	20,00	**PHC BL1646...**

Standard lengths are 10 ft. and 5 m. To complete designation, add chain length. For example, a 5m box of BL422 is PHC BL422X5MTR.
One connecting link is contained per chain. For additional links, add "C/L" for "connecting" and "O/L" for "offset" to the designation.

ANSI Chain number	BS/ISO Chain number	Dimensions Pitch P	Plate lacing	Pin diameter d_2 Max.	Pin length L Max.	Plate height h_2 Max.	Plate thickness T Max.	Ultimate tensile strength Q Min.	Average tensile strength Q_0	Mass per meter	Designation
–	–	mm	–	mm				kN		kg/m	–
BL1666	**LH3266**	50,80	6 x 6	17,46	99,57	48,26	7,52	857,4	1 000,7	24,00	**PHC BL1666...**
BL1688	**LH3288**	50,80	8 x 8	17,46	129,84	48,26	7,52	1 156,5	1 364,6	32,00	**PHC BL1688...**
BL2022	**LH4022**	63,50	2 x 2	23,81	51,74	60,33	9,91	433,7	511,7	15,80	**PHC BL2022...**
BL2023	**LH4023**	63,50	2 x 3	23,81	61,70	60,33	9,91	433,7	511,7	19,80	**PHC BL2023...**
BL2034	**LH4034**	63,50	3 x 4	23,81	81,61	60,33	9,91	649,4	766,2	27,70	**PHC BL2034...**
BL2044	**LH4044**	63,50	4 x 4	23,81	91,57	60,33	9,91	867,4	1 023,5	31,60	**PHC BL2044...**
BL2046	**LH4046**	63,50	4 x 6	23,81	111,48	60,33	9,91	867,4	1 023,5	39,50	**PHC BL2046...**
BL2066	**LH4066**	63,50	6 x 6	23,81	131,39	60,33	9,91	1 301,1	1 535,2	47,40	**PHC BL2066...**
BL2088	**LH4088**	63,50	8 x 8	23,81	171,22	60,33	9,91	1 734,8	2 046,5	63,20	**PHC BL2088...**
AL322	**–**	9,53	2 x 2	3,58	6,80	7,70	1,30	9,0	10,2	0,23	**PHC AL322...**
AL344	**–**	9,53	4 x 4	3,58	11,60	7,70	1,30	18,0	20,0	0,46	**PHC AL344...**
AL422	**–**	12,70	2 x 2	3,96	8,30	10,40	1,50	14,1	16,9	0,39	**PHC AL422...**
AL444	**–**	12,70	4 x 4	3,96	14,40	10,40	1,50	28,2	35,2	0,74	**PHC AL444...**
AL466	**–**	12,70	6 x 6	3,96	20,50	10,40	1,50	42,3	52,7	1,13	**PHC AL466...**
AL522	**–**	15,88	2 x 2	5,08	11,05	12,80	2,03	22,0	27,5	0,64	**PHC AL522...**
AL534	**–**	15,88	3 x 4	5,08	17,00	12,80	2,03	33,0	46,0	1,10	**PHC AL534...**
AL544	**–**	15,88	4 x 4	5,08	19,40	12,80	2,03	44,0	55,0	1,25	**PHC AL544...**
AL566	**–**	15,88	6 x 6	5,08	27,50	12,80	2,03	66,0	82,5	1,79	**PHC AL566...**
AL622	**–**	19,05	2 x 2	5,94	13,00	15,60	2,42	37,0	44,4	0,86	**PHC AL622...**
AL644	**–**	19,05	4 x 4	5,94	22,70	15,60	2,42	63,7	78,8	1,76	**PHC AL644...**
AL666	**–**	19,05	6 x 6	5,94	32,20	15,60	2,42	100,1	118,6	2,60	**PHC AL666...**
AL688	**–**	19,05	8 x 8	5,94	42,20	15,60	2,42	133,4	156,6	3,49	**PHC AL688...**
AL822	**–**	25,40	2 x 2	7,92	16,00	20,50	3,25	56,7	68,6	1,54	**PHC AL822...**
AL844	**–**	25,40	4 x 4	7,92	29,40	20,50	3,25	113,4	135,6	3,00	**PHC AL844...**
AL866	**–**	25,40	6 x 6	7,92	44,20	20,50	3,25	170,0	202,3	4,46	**PHC AL866...**
AL1022	**–**	31,75	2 x 2	9,53	19,60	25,60	4,00	88,5	107,1	2,37	**PHC AL1022...**
AL1044	**–**	31,75	4 x 4	9,53	36,40	25,60	4,00	177,0	203,6	4,68	**PHC AL1044...**
AL1066	**–**	31,75	6 x 6	9,53	52,30	25,60	4,00	265,0	315,3	7,20	**PHC AL1066...**
AL1088	**–**	31,75	8 x 8	9,53	68,50	25,60	4,00	354,0	421,2	9,94	**PHC AL1088...**
AL1222	**–**	38,10	2 x 2	11,10	24,30	30,50	4,80	127,0	151,1	3,65	**PHC AL1222...**
AL1244	**–**	38,10	4 x 4	11,10	43,80	30,50	4,80	254,0	299,7	7,05	**PHC AL1244...**
AL1266	**–**	38,10	6 x 6	11,10	63,20	30,50	4,80	381,0	426,3	10,50	**PHC AL1266...**
AL1288	**–**	38,10	8 x 8	11,10	82,60	30,50	4,80	508,0	568,4	14,03	**PHC AL1288...**
AL1444	**–**	44,45	4 x 4	12,64	51,30	36,40	5,60	372,7	413,6	10,34	**PHC AL1444...**
AL1466	**–**	44,45	6 x 6	12,64	74,56	36,40	5,60	559,0	620,4	15,16	**PHC AL1466...**
AL1644	**–**	50,80	4 x 4	14,21	58,00	41,60	6,40	471,0	522,8	12,98	**PHC AL1644...**
AL1666	**–**	50,80	6 x 6	14,21	83,80	41,60	6,40	706,0	783,6	19,76	**PHC AL1666...**
AL1688	**–**	50,80	8 x 8	14,21	109,50	41,60	6,40	942,0	1 045,5	25,47	**PHC AL1688...**

Standard lengths are 10 ft. and 5 m. To complete designation, add chain length. For example, a 5m box of BL422 is PHC BL422X5MTR.
One connecting link is contained per chain. For additional links, add "C/L" for "connecting" and "O/L" for "offset" to the designation.

Leaf chains
BS/ISO LL0822-LL4888

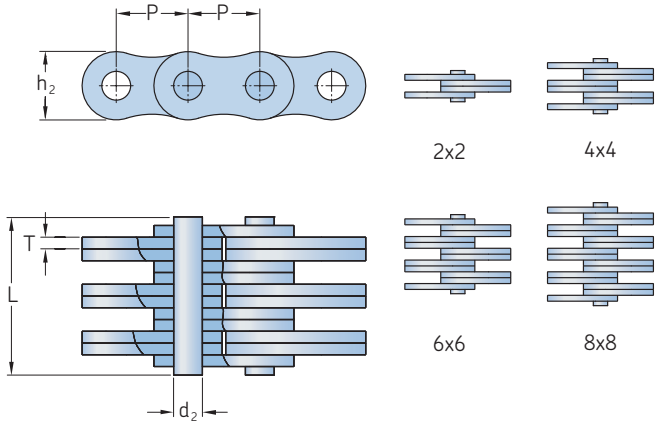

BS/ISO Chain number	Dimensions Pitch	Plate lacing	Pin diameter d_2 Max.	Pin length L Max.	Plate height h_2 Max.	Plate thickness T Max.	Ultimate tensile strength Q Min.	Average tensile strength Q_0	Mass per meter	Designation
–	mm	–	mm				kN		kg/m	–
LL0822	12,70	2 x 2	4,45	8,9	10,60	1,60	18,2	20,4	0,42	**PHC LL0822...**
LL0844	12,70	4 x 4	4,45	15,6	10,60	1,60	36,4	40,7	0,84	**PHC LL0844...**
LL0866	12,70	6 x 6	4,45	22,0	10,60	1,60	54,6	60,0	1,24	**PHC LL0866...**
LL0888	12,70	8 x 8	4,45	28,5	10,60	1,60	72,8	80,0	1,64	**PHC LL0888...**
LL1022	15,88	2 x 2	5,08	9,2	13,70	1,60	22,7	25,5	0,54	**PHC LL1022...**
LL1044	15,88	4 x 4	5,08	15,8	13,70	1,60	45,4	51,0	1,06	**PHC LL1044...**
LL1066	15,88	6 x 6	5,08	22,1	13,70	1,60	68,1	76,3	1,57	**PHC LL1066...**
LL1088	15,88	8 x 8	5,08	28,8	13,70	1,60	90,8	101,9	2,10	**PHC LL1088...**
LL1222	19,05	2 x 2	5,72	10,4	16,00	1,85	29,5	33,2	0,73	**PHC LL1222...**
LL1244	19,05	4 x 4	5,72	17,9	16,00	1,85	59,0	66,4	1,44	**PHC LL1244...**
LL1266	19,05	6 x 6	5,72	25,4	16,00	1,85	88,5	99,7	2,15	**PHC LL1266...**
LL1288	19,05	8 x 8	5,72	32,9	16,00	1,85	118,0	132,9	2,84	**PHC LL1288...**
LL1622	25,40	2 x 2	8,28	17,2	21,00	3,10	58,0	66,7	1,52	**PHC LL1622...**
LL1644	25,40	4 x 4	8,28	29,6	21,00	3,10	116,0	140,0	2,90	**PHC LL1644...**
LL1666	25,40	6 x 6	8,28	42,4	21,00	3,10	174,0	208,8	4,30	**PHC LL1666...**
LL1688	25,40	8 x 8	8,28	54,9	21,00	3,10	232,0	278,0	5,71	**PHC LL1688...**
LL2022	31,75	2 x 2	10,19	20,1	26,40	3,50	95,0	109,2	2,33	**PHC LL2022...**
LL2044	31,75	4 x 4	10,19	33,8	26,40	3,50	190,0	218,5	4,40	**PHC LL2044...**
LL2066	31,75	6 x 6	10,19	50,1	26,40	3,50	285,0	324,6	6,79	**PHC LL2066...**
LL2088	31,75	8 x 8	10,19	64,0	26,40	3,50	380,0	435,1	8,90	**PHC LL2088...**
LL2422	38,10	2 x 2	14,63	28,4	33,40	5,00	170,0	195,5	4,47	**PHC LL2422...**
LL2444	38,10	4 x 4	14,63	46,3	33,40	5,00	340,0	380,8	8,22	**PHC LL2444...**
LL2466	38,10	6 x 6	14,63	66,4	33,40	5,00	510,0	571,2	12,22	**PHC LL2466...**
LL2488	38,10	8 x 8	14,63	86,6	33,40	5,00	680,0	775,2	16,30	**PHC LL2488...**
LL2822	44,45	2 x 2	15,90	32,2	37,08	6,00	200,0	224,0	5,10	**PHC LL2822...**
LL2844	44,45	4 x 4	15,90	56,4	37,08	6,00	400,0	448,0	9,90	**PHC LL2844...**
LL2866	44,45	6 x 6	15,90	80,8	37,08	6,00	600,0	672,0	14,60	**PHC LL2866...**
LL2888	44,45	8 x 8	15,90	105,2	37,08	6,00	800,0	896,0	19,40	**PHC LL2888...**
LL3222	50,80	2 x 2	17,81	34,8	42,00	6,40	260,0	291,2	6,20	**PHC LL3222...**
LL3244	50,80	4 x 4	17,81	60,6	42,00	6,40	520,0	582,4	12,30	**PHC LL3244...**
LL3266	50,80	6 x 6	17,81	86,4	42,00	6,40	780,0	873,6	18,30	**PHC LL3266...**
LL3288	50,80	8 x 8	17,81	112,2	42,00	6,40	1 040,0	1 176,0	24,00	**PHC LL3288...**
LL4022	63,50	2 x 2	22,89	42,2	52,76	8,00	360,0	403,2	10,30	**PHC LL4022...**
LL4044	63,50	4 x 4	22,89	74,4	52,76	8,00	780,0	873,6	20,00	**PHC LL4044...**
LL4066	63,50	6 x 6	22,89	106,5	52,76	8,00	1 080,0	1 209,6	30,00	**PHC LL4066...**
LL4088	63,50	8 x 8	22,89	140,0	52,76	8,00	1 440,0	1 747,2	39,10	**PHC LL4088...**
LL4822	76,20	2 x 2	29,24	54,6	63,88	10,00	560,0	627,2	18,50	**PHC LL4822...**
LL4844	76,20	4 x 4	29,24	92,6	63,88	10,00	1 120,0	1 554,4	35,70	**PHC LL4844...**
LL4866	76,20	6 x 6	29,24	133,4	63,88	10,00	1 680,0	1 880,0	53,00	**PHC LL4866...**
LL4888	76,20	8 x 8	29,24	174,2	63,88	10,00	2 240,0	2 508,8	70,40	**PHC LL4888...**

Standard lengths are 10 ft. and 5 m. To complete designation, add chain length. For example, a 5m box of LL0822 is PHC LL0822X5MTR.
One connecting link is contained per chain. For additional links, add "C/L" for "connecting" and "O/L" for "offset" to the designation.

Leaf chains

FL, F19V, FLC | 12XX, 15XX, 19XX, 25XX

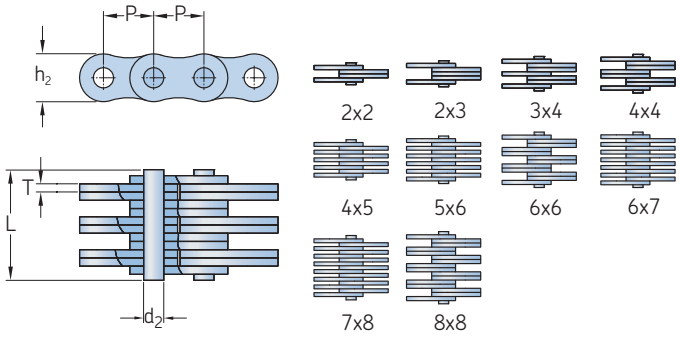

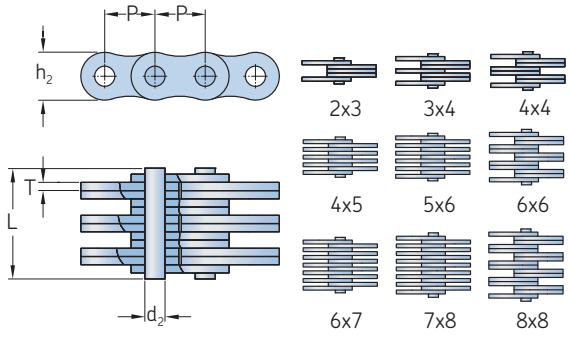

Chain number	Dimensions Pitch P	Plate lacing	Pin diameter d_2 Max.	Pin length L Max.	Plate height h_2 Max.	Plate thickness T Max.	Chain length over 100 pitches +/- 0,25%	Ultimate tensile strength Q Min.	Average tensile strength Q_0	Mass per meter	Designation
–	mm	–	mm					kN		kg/m	–
FL644	5,94	4 x 4	1,85	6,6	4,7	0,60	–	6,50	7,8	0,13	**PHC FL644...**
FL666	5,94	6 x 6	1,85	9,3	4,7	0,60	–	9,75	11,8	0,20	**PHC FL666...**
FL688	5,94	8 x 8	1,85	12,0	4,7	0,60	–	13,00	15,6	0,25	**PHC FL688...**
FL844	8,00	4 x 4	2,31	7,9	6,9	0,73	–	10,00	12,1	0,25	**PHC FL844...**
FL944	9,53	4 x 4	3,28	10,4	8,7	1,04	–	21,00	24,7	0,43	**PHC FL944...**
FL966	9,53	6 x 6	3,28	14,9	8,7	1,00	–	31,00	36,8	0,65	**PHC FL966...**
F122	12,70	2 x 2	3,58	7,0	8,2	1,00	–	11,43	13,6	0,19	**PHC F122...**
F1223	12,70	2 x 3	4,45	12,8	10,2	2,03	–	20,00	23,8	0,61	**PHC F1223...**
FL1244	12,70	4 x 4	4,45	16,7	10,2	1,70	–	44,00	52,3	0,83	**PHC FL1244...**
F19V-44	19,05	4 x 4	6,50	22,4	15,2	2,42	–	71,00	84,3	1,73	**PHC F19V-44...**
F19V-66	19,05	6 x 6	6,50	32,3	15,2	2,42	–	106,00	125,9	2,57	**PHC F19V-66...**
FLC534	15,88	3 x 4	5,08	15,3	12,7	1,85	–	40,40	44,4	0,99	**PHC FLC534...**
FLC545	15,88	4 x 5	5,08	19,2	12,7	1,85	–	54,30	59,7	1,27	**PHC FLC545...**
FLC556	15,88	5 x 6	5,08	22,7	12,7	1,85	–	67,60	74,3	1,54	**PHC FLC556...**
FLC1056	31,75	5 x 6	9,53	40,6	25,4	3,25	–	137,90	151,0	5,44	**PHC FLC1056...**
FLC1067	31,75	6 x 7	9,53	47,2	25,4	3,25	–	165,40	181,9	6,42	**PHC FLC1067...**
FLC1078	31,75	7 x 8	9,53	53,8	25,4	3,25	–	193,00	212,0	7,40	**PHC FLC1078...**
1234	12,70	3 x 4	4,45	14,2	10,6	1,70	1 262	31,00	–	0,75	**PHC 1234...**
1256	12,70	5 x 6	4,45	21,1	10,6	1,70	1 262	53,00	–	1,17	**PHC 1256...**
1288	12,70	8 x 8	4,45	29,9	10,6	1,70	1 262	85,00	–	1,70	**PHC 1288...**
1523	15,88	2 x 3	5,08	12,1	12,7	1,94	1 580	29,00	–	0,75	**PHC 1523...**
1534	15,88	3 x 4	5,08	16,0	12,7	1,94	1 580	46,00	–	1,04	**PHC 1534...**
1544	15,88	4 x 4	5,08	18,1	12,7	1,94	1 580	58,00	–	1,18	**PHC 1544...**
1545	15,88	4 x 6	5,08	20,3	12,7	1,94	1 580	58,00	–	1,33	**PHC 1545...**
1556	15,88	5 x 6	5,08	24,0	12,7	1,94	1 580	72,00	–	1,63	**PHC 1556...**
1566	15,88	6 x 6	5,08	26,2	12,7	1,94	1 580	87,00	–	1,77	**PHC 1566...**
1567	15,88	6 x 7	5,08	28,0	12,7	1,94	1 580	90,00	–	1,91	**PHC 1567...**
1578	15,88	7 x 8	5,08	32,5	12,7	1,94	1 580	101,00	–	2,20	**PHC 1578...**
1588	15,88	8 x 8	5,08	34,0	12,7	1,94	1 580	115,00	–	2,34	**PHC 1588...**
1944	19,05	4 x 4	5,72	21,3	15,0	2,29	1 891	73,00	–	1,58	**PHC 1944...**
1966	19,05	6 x 6	5,72	30,7	15,0	2,29	1 891	110,00	–	2,37	**PHC 1966...**
1988	19,05	8 x 8	5,72	40,0	15,0	2,29	1 891	140,00	–	3,13	**PHC 1988...**
2523	25,40	2 x 3	8,28	18,8	20,2	3,06	2 532	72,00	–	1,83	**PHC 2523...**
2534	25,40	3 x 4	8,28	25,3	20,2	3,06	2 532	108,00	–	2,55	**PHC 2534...**
2545	25,40	4 x 5	8,28	31,6	20,2	3,06	2 532	144,00	–	3,26	**PHC 2545...**
2556	25,40	5 x 6	8,28	37,2	20,2	3,06	2 532	180,00	–	3,96	**PHC 2556...**
2567	25,40	6 x 7	8,28	43,8	20,2	3,06	2 532	216,00	–	4,68	**PHC 2567...**
2578	25,40	7 x 8	8,28	50,0	20,2	3,06	2 532	252,00	–	5,39	**PHC 2578...**
2588	25,40	8 x 8	8,28	52,8	20,2	3,06	2 532	290,00	–	5,77	**PHC 2588...**

Standard lengths are 10 ft. and 5 m. To complete designation, add chain length. For example, a 5m box of FL644 is PHC FL644X5MTR.
One connecting link is contained per chain. For additional links, add "C/L" for "connecting" and "O/L" for "offset" to the designation.

SKF
HUB

Couplings

Grid couplings 104

Gear couplings 109

SKF Flex couplings 119

SKF Flex spacer coupling 121

Chain couplings 123

Rigid couplings. 125

FRC couplings. 127

Jaw couplings. 129

Universal joints 131

SKF Couplings

SKF coupling range nomenclature has a defined prefix of PHE. The coupling range is covered by limited standards, AGMA is the main standard to cover interchangeability for couplings, and spacers are covered by ANSI or ISO for lengths.

Couplings

The coupling range designation from SKF has the following is an example to indicate set up.

SKF Designation prefix — PHE F90 HTB FLG

Coupling size and type
Example:
F90 - Flex coupling size 90
1070TG – taper grid coupling size 1070

Supplementary
Many different supplementary designations, examples
HTB- taper bushing type H
NR – insert type Nitrile
HCOVER – cover type H, horizontal

Note
See SKF product training for full supplementary notations

Supplementary
Many different supplementary designations, example
FLG – flange hub only for Flex coupling

Couplings (PHE Product Group)

SKF Flex-, Chain-, FRC-, Jaw couplings and Universal joints are manufactured according to established market standards and are fully interchangeable with other brands:

- Metric bore keyway machined according to BS 4231:Part 1 and DIN 6885;
- British imperial bore keyway machined according to BS 46:Part 1; and
- American imperial bore keyway machined according to ASME B17.1.

SKF Grid, Gear and Rigid couplings are manufactured according to established industrial standard, which is acceptable throughout the world. SKF Gear couplings are interchangeable, half to half, to industries standard using AGMA bolt pattern.

Every coupling is protected by a specific treatment, which depends on the material or type of packaging: (1) phosphate coating, (2) blackening, (3) spray painting or (4) anti-corrosion oil.

Main materials used in couplings

SKF Flex coupling	Flange in grey cast iron HT250; tyre available in nitrile or chloroprene (FRAS); rubber and spacer in grey cast Iron HT250.
Chain coupling	Flange in premium carbon steel no. 45 and cover available in aluminium and plastic.
FRC coupling	Flange in grey cast iron HT250 and elements available in nitrile or chloroprene (FRAS) rubber.
Jaw coupling	Flange in grey cast iron HT250; spacer in aluminium and insert available in nitrile, urethane and Hytrel®.
Gear coupling	Hub in steel SM45C equivalent to AISI 1045; grid member ain spring steel SW-C; horizontal split cover in aluminium.
Gear coupling	Sleeve and hub in steel SM45C equivalent to AISI 1045.
Rigid coupling	All components manufactured in grey cast iron HT250.
Universal Joint	Premium carbon steel.

In high output (kW) and high torque applications where vibration, shock loads and misalignment occur, SKF grid couplings are an excellent choice.

The unique design of the grid and hub teeth enable these couplings to accommodate movement and stresses from all three planes, thereby reducing vibration levels by as much as 30%.

The tapered grid element is manufactured from a high strength alloy steel. The grid, which is the primary wear component of the coupling, is designed for quick and easy replacement. Unlike other couplings, the hubs and other components are not disturbed. This makes realignment unnecessary and further reduces downtime and maintenance costs.

Order data

Coupling type	Hubs					Cover		Grid		Spacer hub set	
–	Solid bore	Qty		Bored to size	Qty	–	Qty	–	Qty	(... = DBSE dimension)	Qty
Horizontal split cover	PHE 1050TGRSB	2	or	PHE 1050TG...MM	2	PHE 1050TGHCOVER	1	PHE 1050TGGRID	1	–	–
Vertical split cover	PHE 1050TGRSB	2	or	PHE 1050TG...MM	2	PHE 1050TGVCOVER	1	PHE 1050TGGRID	1	–	–
Full spacer	PHE 1050TGS-SHRSB	2	or	PHE 1050TGS-SH...MM	2	PHE 1050TGHCOVER	1	PHE 1050TGGRID	1	PHE 1050TGFS-SPACERX...MM	1
Half spacer	PHE 1050TGRSB	1		–	–	PHE 1050TGHCOVER	1	PHE 1050TGGRID	1	PHE 1050TGHS-SPACERX...MM	1
	PHE 1050TGS-SHRSB	1	or	PHE 1050TGS-SH...MM	1	–	–	–	–	–	–

Each complete full or half spacer coupling consists of: 2 hubs, 1 grid, 1 cover and 1 spacer hub set. Each complete horizontal or vertical split cover coupling consists of: 2 hubs, 1 grid and 1 cover.
For bored to size designations, add bore size. For example, PHE 1050TG25MM

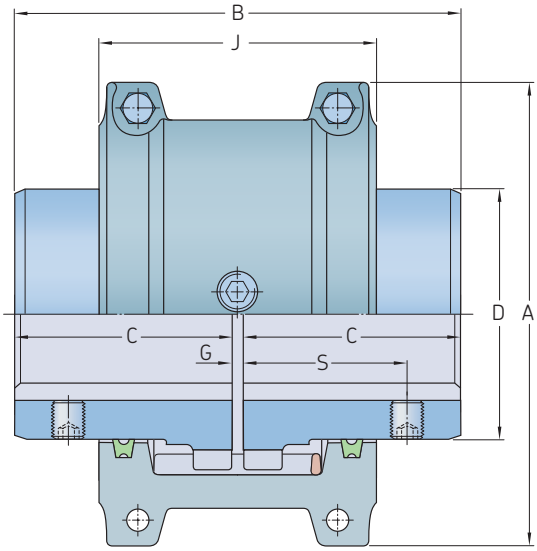

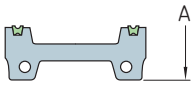

Cover profiles
Sizes 1020 - 1140

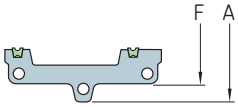

Sizes 1150 - 1200

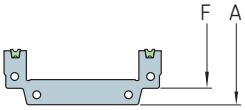

Sizes 1210-1220

Size	Power per 100 r/min	Rated torque	Speed	Bore diameter		Dimensions							Gap			Lubricant mass	Coupling mass without bore
						A	B	C	D	J	F	S	G				
			Max.	Min.	Max.								Min.	Normal	Max.		
–	kW	Nm	r/min	mm		mm							mm			kg	
1020 TGH	0,54	52	4 500	12	30	101,6	98,2	47,5	39,7	66,0	–	39,1	1,5	3	4,5	0,027	1,9
1030 TGH	1,60	149	4 500	12	36	110,0	98,2	47,5	49,2	68,3	–	39,1	1,5	3	4,5	0,04	2,6
1040 TGH	2,60	249	4 500	12	44	117,5	104,6	50,8	57,2	70,0	–	40,1	1,5	3	4,5	0,054	3,4
1050 TGH	4,60	435	4 500	12	50	138,0	123,6	60,3	66,7	79,5	–	44,7	1,5	3	4,5	0,068	5,4
1060 TGH	7,20	684	4 500	19	57	150,5	130,0	63,5	76,2	92,0	–	52,3	1,5	3	4,5	0,086	7,3
1070 TGH	10,40	994	4 125	19	65	161,9	155,4	76,2	87,3	95,0	–	53,8	1,5	3	4,5	0,113	10,0
1080 TGH	21,50	2 050	3 600	27	79	194,0	180,8	88,9	104,8	116,0	–	64,5	1,5	3	6,0	0,172	18,0
1090 TGH	39,00	3 730	3 600	27	95	213,0	199,8	98,4	123,8	122,0	–	71,6	1,5	3	6,0	0,254	25,0
1100 TGH	65,70	6 280	2 440	41	107	250,0	246,2	120,6	142,1	155,5	–	–	1,5	5	9,5	0,426	42,0
1110 TGH	97,60	9 320	2 250	41	117	270,0	259,0	127,0	160,3	161,5	–	–	1,5	5	9,5	0,508	54,0
1120 TGH	143,00	13 700	2 025	60	136	308,0	304,4	149,2	179,4	191,5	–	–	1,5	6	12,5	0,735	81,0
1130 TGH	208,00	19 900	1 800	66	165	346,0	329,8	161,9	217,5	195,0	–	–	1,5	6	12,5	0,907	121,0
1140 TGH	299,00	28 600	1 650	66	184	384,0	374,4	184,2	254,0	201,0	–	–	1,5	6	12,5	1,13	178,0
1150 TGH	416,00	39 800	1 500	108	203	453,1	371,8	182,9	269,2	271,3	391,2	–	1,5	6	12,5	1,95	234,0
1160 TGH	586,00	55 900	1 350	120	228	501,4	402,2	198,1	304,8	278,9	436,9	–	1,5	6	12,5	2,81	317,0
1170 TGH	781,00	74 600	1 225	133	279	566,4	437,8	215,9	355,6	304,3	487,2	–	1,5	6	12,5	3,49	448,0
1180 TGH	1 080,00	103 000	1 100	152	311	629,9	483,6	238,8	393,7	321,1	554,7	–	1,5	6	12,5	3,76	619,0
1190 TGH	1 430,00	137 000	1 050	152	339	675,6	524,2	259,1	436,9	325,1	607,8	–	1,5	6	12,5	4,4	776,0
1200 TGH	1 950,00	186 000	900	177	361	756,9	564,8	279,4	497,8	355,6	660,4	–	1,5	6	12,5	5,62	1 057,0
1210 TGH	2 611,00	249 000	820	177	390	844,5	622,3	304,8	533,4	431,8	750,8	–	1,5	6	12,7	10,5	1 425,0
1220 TGH	3 523,00	336 000	730	203	420	920,7	662,9	325,1	571,5	490,2	822,2	–	1,5	6	12,7	16,1	1 785,0

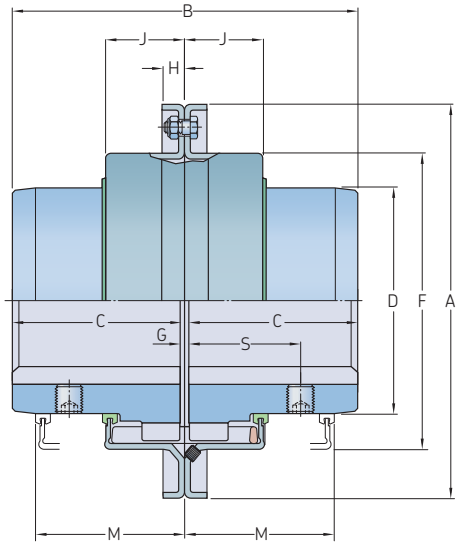

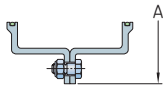

Cover profiles
Sizes 1020 - 1140

Size	Power per 100 r/min	Rated torque	Speed	Bore diameter		Dimensions									Gap			Lubricant weight	Coupling weight without bore
						A	B	C	D	F	H	J	M	S	G				
			Max.	Min.	Max.										Min.	Normal	Max.		
–	kW	Nm	r/min	mm		mm									mm			kg	
1020 TGV	0,54	52	6 000	12	30	111,1	98,0	47,5	39,7	64,3	9,7	24,2	47,8	39,1	1,5	3	4,5	0,027	2,0
1030 TGV	1,60	149	6 000	12	36	120,7	98,0	47,5	49,2	73,8	9,7	25,0	47,8	39,1	1,5	3	4,5	0,04	2,6
1040 TGV	2,60	249	6 000	12	44	128,5	104,6	50,8	57,2	81,8	9,7	25,7	50,8	40,1	1,5	3	4,5	0,054	3,4
1050 TGV	4,60	435	6 000	12	50	147,6	123,6	60,3	66,7	97,6	11,9	31,2	60,5	44,7	1,5	3	4,5	0,068	5,4
1060 TGV	7,20	684	6 000	19	57	162,0	130,0	63,5	76,2	111,1	12,7	32,2	63,5	52,3	1,5	3	4,5	0,086	7,3
1070 TGV	10,40	994	5 500	19	65	173,0	155,4	76,2	87,3	122,3	12,7	33,7	66,5	53,8	1,5	3	4,5	0,113	10,0
1080 TGV	21,50	2 050	4 750	27	79	200,0	180,8	88,9	104,8	149,2	12,7	44,2	88,9	64,5	1,5	3	6,0	0,172	18,0
1090 TGV	39,00	3 730	4 000	27	95	231,8	199,8	98,4	123,8	168,3	12,7	47,7	95,2	71,6	1,5	3	6,0	0,254	25,0
1100 TGV	65,70	6 280	3 250	41	107	266,7	245,7	120,6	142,1	198,0	15,7	60,0	120,7	–	1,5	5	9,5	0,426	42,0
1110 TGV	97,60	9 320	3 000	41	117	285,8	258,5	127,0	160,3	216,3	16,0	64,2	124,0	–	1,5	5	9,5	0,508	54,0
1120 TGV	143,00	13 700	2 700	60	136	319,0	304,4	149,2	179,4	245,5	17,5	73,4	142,7	–	1,5	6	12,5	0,735	81,0
1130 TGV	208,00	19 900	2 400	66	165	377,8	329,8	161,9	217,5	283,8	20,6	75,1	146,0	–	1,5	6	12,5	0,907	122,0
1140 TGV	299,00	28 600	2 200	66	184	416,0	371,6	184,2	254,0	321,9	20,6	78,2	155,4	–	1,5	6	12,5	1,13	180,0
1150 TGV	416,00	39 800	2 000	108	203	476,3	371,8	182,9	269,2	374,4	19,3	106,9	203,2	–	1,5	6	12,5	1,95	230,0
1160 TGV	586,00	55 900	1 750	120	228	533,4	402,2	198,1	304,8	423,9	30,0	114,3	215,9	–	1,5	6	12,5	2,81	321,0
1170 TGV	781,00	74 600	1 600	133	279	584,2	437,8	215,9	355,6	474,7	30,0	119,4	226,1	–	1,5	6	12,5	3,49	448,0
1180 TGV	1 080,00	103 000	1 400	152	311	630,0	483,6	238,8	393,7	–	–	130,0	265,0	–	1,5	6	12,5	3,76	591,0
1190 TGV	1 430,00	137 000	1 300	152	339	685,0	524,2	259,1	436,9	–	–	135,0	275,0	–	1,5	6	12,5	4,4	761,0
1200 TGV	1 950,00	186 000	1 100	177	361	737,0	564,8	279,4	497,8	–	–	145,0	295,0	–	1,5	6	12,5	5,62	1 021,0

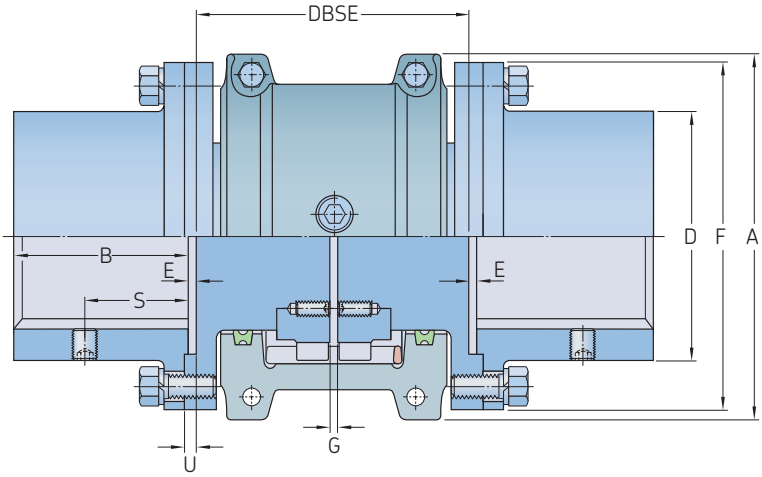

Size	Power per 100 r/min	Rated torque	Speed	Bore diameter		Dimensions									Gap		Flange bolts	Lubricant weight	Coupling weight without bore and min. BE
						A	B	DBSE		D	E	F	S	U	G				
			Max.	Min.	Max.			Min.	Max.						Min.	Normal	Qty		
–	kW	Nm	r/min	mm		mm									mm			kg	
1020 TGFS	0,54	52	3 600	12	35	101,6	35	89	203	52	0,8	86	27,4	1,8	1,5	5,0	4	0,027	3,9
1030 TGFS	1,60	149	3 600	12	43	110,0	41	89	216	59	0,8	94	31,5	1,8	1,5	5,0	8	0,04	5,2
1040 TGFS	2,60	249	3 600	12	56	117,5	54	89	216	78	0,8	113	27,4	1,8	1,5	5,0	8	0,054	8,4
1050 TGFS	4,60	435	3 600	12	67	138,0	60	112	216	87	0,8	126	40,6	1,8	1,5	5,0	8	0,068	12,8
1060 TGFS	7,20	684	3 600	19	80	150,5	73	127	330	103	1,8	145	43,2	2,8	1,5	5,0	8	0,086	20,5
1070 TGFS	10,40	994	3 600	19	85	161,9	79	127	330	109	1,8	153	46,7	2,8	1,5	5,0	12	0,113	24,8
1080 TGFS	21,50	2 050	3 600	27	95	194,0	89	184	406	122	1,8	178	49,8	2,8	1,5	5,0	12	0,172	40,0
1090 TGFS	39,00	3 730	3 600	27	110	213,0	102	184	406	142	1,8	210	56,9	2,8	1,5	5,0	12	0,254	60,0
1100 TGFS	65,70	6 280	2 440	41	130	250,0	90	203	406	171	1,6	251	–	3,2	1,5	6,5	12	0,426	90,2
1110 TGFS	97,60	9 320	2 250	41	150	270,0	104	210	406	196	1,6	277	–	3,2	1,5	6,5	12	0,508	119,0
1120 TGFS	143,00	13 700	2 025	60	170	308,0	119	246	406	225	1,6	319	–	4,0	1,5	9,5	12	0,735	178,0
1130 TGFS	208,00	19 900	1 800	66	190	346,0	135	257	406	238	1,6	346	–	4,0	1,5	9,5	12	0,907	237,0
1140 TGFS	299,00	28 600	1 650	66	210	384,0	152	267	406	266	1,6	386	–	4,0	1,5	9,5	12	1,13	327,0
1150 TGFS	416,00	39 800	1 500	108	270	453,1	173	345	371	334	5,1	425	–	–	1,5	9,5	14	1,95	462,0
1160 TGFS	586,00	55 900	1 350	120	290	501,4	186	356	406	366	6,6	457	–	–	1,5	9,5	14	2,81	566,0
1170 TGFS	781,00	74 600	1 225	133	340	566,4	220	384	445	425	8,4	527	–	–	1,5	9,5	16	3,49	856,0
1180 TGFS	1 080,00	103 000	1 100	133	340	629,9	249	400	490	451	5,1	591	–	8,1	1,5	9,5	16	3,76	1 135,0
1190 TGFS	1 430,00	137 000	1 050	152	380	675,6	276	411	530	508	5,1	660	–	8,1	1,5	9,5	18	4,4	1 525,0
1200 TGFS	1 950,00	186 000	900	177	400	756,9	305	445	575	530	6,1	711	–	9,1	1,5	9,5	18	5,62	1 910,0

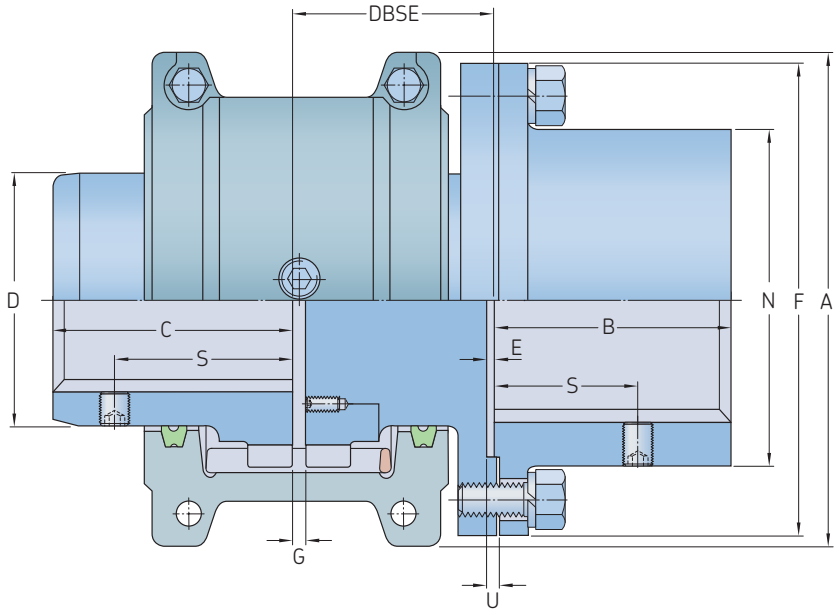

Size	Power per 100 r/min	Rated torque	Speed	Bore diameter			Dimensions												Gap		Flange bolts	Lubricant weight	Coupling weight without bore
						Shaft hub										Shaft hub	T hub						
			Max.	Min.	Max.	Max.	A	B	C	D	DBSE Min.	DBSE Max.	N	E	F	S	S	U	G Min.	Normal	Qty		
–	kW	Nm	r/min	mm			mm												mm			kg	
1020 TGHS	0,54	52	3 600	12	30	35	101,6	35	47,5	39,7	45	102	52	0,8	86	27,4	39,1	1,8	1,5	3	4	0,027	2,9
1030 TGHS	1,60	149	3 600	12	36	43	110,0	41	47,5	49,2	45	109	59	0,8	94	31,5	39,1	1,8	1,5	3	8	0,04	3,9
1040 TGHS	2,60	249	3 600	12	44	56	117,5	54	50,8	57,2	45	109	78	0,8	113	27,4	40,1	1,8	1,5	3	8	0,054	5,9
1050 TGHS	4,60	435	3 600	12	50	67	138,0	60	60,3	66,7	57	109	87	0,8	126	40,6	44,7	1,8	1,5	3	8	0,068	9,1
1060 TGHS	7,20	684	3 600	19	57	80	150,5	73	63,5	76,2	64	166	103	1,8	145	43,2	52,3	2,8	1,5	3	8	0,086	14,0
1070 TGHS	10,40	994	3 600	19	65	85	161,9	79	76,2	87,3	64	166	109	1,8	153	46,7	53,8	2,8	1,5	3	12	0,113	17,6
1080 TGHS	21,50	2 050	3 600	27	79	95	194,0	89	88,9	104,8	93	204	122	1,8	178	49,8	64,5	2,8	1,5	3	12	0,172	29,0
1090 TGHS	39,00	3 730	3 600	27	95	110	213,0	102	98,4	123,8	93	204	142	1,8	210	56,9	71,6	2,8	1,5	3	12	0,254	42,8
1100 TGHS	65,70	6 280	2 440	41	107	130	250,0	90	120,6	142,1	103	205	171	1,6	251	–	–	3,2	1,5	5	12	0,426	66,0
1110 TGHS	97,60	9 320	2 250	41	117	150	270,0	104	127,0	160,3	106	205	196	1,6	277	–	–	3,2	1,5	5	12	0,508	84,5
1120 TGHS	143,00	13 700	2 025	60	136	170	308,0	119	149,2	179,4	125	205	225	1,6	319	–	–	4,0	1,5	6	12	0,735	129,0
1130 TGHS	208,00	19 900	1 800	66	165	190	346,0	135	161,9	217,5	130	205	238	1,6	346	–	–	4,0	1,5	6	12	0,907	179,0
1140 TGHS	299,00	28 600	1 650	66	184	210	384,0	152	184,2	254,0	135	205	266	1,6	386	–	–	4,0	1,5	6	12	1,13	252,0
1150 TGHS	416,00	39 800	1 500	108	203	270	453,1	173	182,9	269,2	175	187	334	5,1	425	–	–	–	1,5	6	14	1,95	348,0
1160 TGHS	586,00	55 900	1 350	120	228	290	501,4	186	198,1	304,8	180	205	366	6,6	457	–	–	–	1,5	6	14	2,81	441,0
1170 TGHS	781,00	74 600	1 225	133	279	340	566,4	220	215,9	355,6	194	224	425	8,4	527	–	–	–	1,5	6	16	3,49	652,0
1180 TGHS	1 080,00	103 000	1 100	133	311	340	629,9	249	238,8	393,7	202	247	451	5,1	591	–	–	8,1	1,5	6	16	3,76	877,0
1190 TGHS	1 430,00	137 000	1 050	152	339	380	675,6	276	259,1	436,9	207	267	508	5,1	660	–	–	8,1	1,5	6	18	4,4	1150,0
1200 TGHS	1 950,00	186 000	900	177	361	400	756,9	305	279,4	497,8	224	289	530	6,1	711	–	–	9,1	1,5	6	18	5,62	1484,0

Very high-torque ratings, along with unparalleled bore capacities, give this coupling a great advantage over other types of couplings. SKF gear couplings are rated up to 555 000 Nm with a maximum bore of 495 mm. This is a heavy duty coupling with incredible design flexability, making it an economical choice for many applications.

The unique design of the gear couplings tooth crowning dramaticaly reduces backlash and radial clearance. The hub bore capacities are the largest in the industry allowing for low cost and long service life.

Order data

Coupling type	Hubs	Qty	Cover	Qty	Assembly kit	Qty	Spacer/floating shaft and kits ... = DBSE dimension	Qty
Double engagement	PHE 50GCRSB	2	PHE 50GCCOVER	2	PHE 50GCKIT	1	–	–
Size 80 and above	PHE 80GCRSB	2	PHE 80GCMCOVER	1	PHE 80GCKIT	1	–	–
	–	–	PHE 80GCFCOVER	1	–	–	–	–
Single engagement	PHE 50GCSERSB	1	PHE 50GCCOVER	1	PHE 50GCKIT	1	–	–
	PHE 50GCRSB	1	–	–	–	–	–	–
Size 80 and above	PHE 80GCSERSB	1	PHE 80GCMCOVER	1	PHE 80GCKIT	1	–	–
	PHE 80GCRSB	1	–	–	–	–	–	–
Double engagement spacer	PHE 50GCRSB	2	PHE 50GCCOVER	2	PHE 50GCKIT	2	PHE 50GCSPACER...MM	1
Double engagement slide type 1, 2, 3 **Type 1**	PHE 50GCRSB	2	PHE 50GCSCOVER	2	PHE 50GCKIT	1	PHE 50GCCPLATE	1
Type 2	PHE 50GCST2RSB	2	PHE 50GCSCOVER	2	PHE 50GCKIT	1	PHE 50GCCPLATE	1
Type 3	PHE 50GCRSB	2	PHE 50GCCCOVER	2	PHE 50GCKIT	1	PHE 50GCCPLATE	1
	–	–	–	–	–	–	PHE 50GCT3DISC	2
Single engagement slide type 1 and 2 **Type 1**	PHE 50GCRSB	1	PHE 50GCSCOVER	1	PHE 50GCKIT	1	PHE 50GCCPLATE	1
	PHE 50GCSERSB	1	–	–	–	–	–	–
Type 2	PHE 50GCST2RSB	1	PHE 50GCSCOVER	1	PHE 50GCKIT	1	PHE 50GCCPLATE	1
	PHE 50GCSERSB	1	–	–	–	–	–	–
Single engagement floating shaft	PHE 50GCFSERSB	2	PHE 50GCCOVER	2	PHE 50GCKIT	2	PHE 50GCFSHAFT .. MM	1
	PHE 50GCRSB	2	–	–	–	–	PHE 50GCFSEDISC	2
Double engagement vertical	PHE 50GCVRSB	2	PHE 50GCVCOVER	2	PHE 50GCKIT	1	50GCVCTRKIT	1
Single engagement vertical	PHE 50GCVRSB	1	PHE 50GCVCOVER	1	PHE 50GCKIT	1	50GCVCTRKIT	–
	PHE 50GCSERSB	1	–	–	–	–	–	–
Single engagement vertical floating	PHE 50GCVRSB	1	PHE 50GCVCOVER	1	PHE 50GCKIT	2	50GCVCTRKIT	2
	PHE 50GCFSERSB	1	–	–	–	–	–	–
	PHE 50GCVRSB	1	PHE 50GCVCOVER	1	PHE 50GCKIT	2	PHE 50GCFSHAFT .. MM	1
	PHE 50GCSERSB	1	–	–	–	–	–	–
Rigid flanged sleeve	PHE 50GCRRSB	2	–	–	PHE 50GCRKIT	1	–	–
Size 80 and above	PHE 80GCRRSB	2	–	–	PHE 80GCRKIT	1	PHE 80GCRRING	1

A complete gear coupling consists of: 2 hubs, 2 covers and 1 assembly kit.
Coupling size 80 and above consists of: 2 hubs, 1 male cover, 1 female cover and 1 assembly kit.
For bored to size designations, add bore size RSB. For example: PHE 50GCX500MM.
For shrouded bolt covers, use cover number, e.g. PHE 50SGCCOVER and PHE 50SGCKIT for the assembly kit.
The assembly kit includes oil seals, gasket, bolts and lock-nuts.

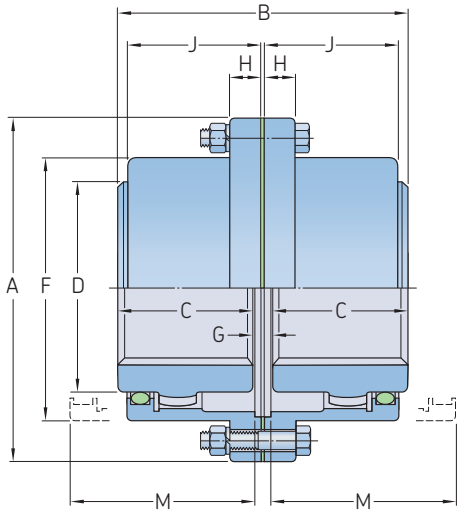

Size 10 to 70

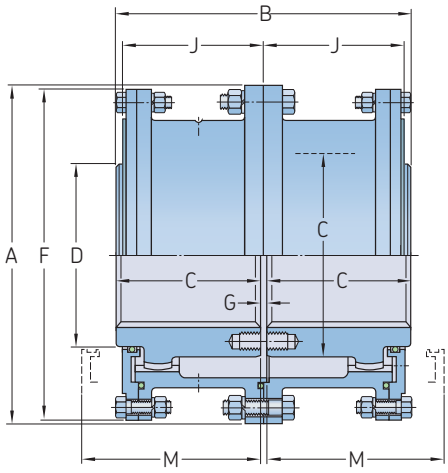

Size 80 to 120

Size	Power per 100 r/min	Rated torque	Speed	Bore diameter		Dimensions								Gap	Lubricant mass	Coupling mass without bore and min. DBSE
			Max.	Min.	Max.	A	B	C	D	F	H	J	M*	G Min.		
–	kW	Nm	r/min	mm		mm								mm	kg	
10 GC	11,9	1 139	8 000	13	50	116	89	43	69	84	14,0	39	51	3	0,04	5
15 GC	24,6	2 350	6 500	20	65	152	101	49	86	105	19,0	48	61	3	0,07	9
20 GC	44,7	4 270	5 600	26	78	178	127	62	105	126	19,0	59	77	3	0,12	16
25 GC	78,3	7 474	5 000	32	98	213	159	77	131	155	21,8	72	92	5	0,23	29
30 GC	127,0	12 100	4 400	39	111	240	187	91	152	180	21,8	84	107	5	0,36	43
35 GC	194,0	18 500	3 900	51	134	279	218	106	178	211	28,4	98	130	6	0,54	68
40 GC	321,0	30 609	3 600	64	160	318	248	121	210	245	28,4	111	145	6	0,91	97
45 GC	440,0	42 000	3 200	77	183	346	278	135	235	274	28,4	123	166	8	1,04	136
50 GC	593,0	56 600	2 900	89	200	389	314	153	254	306	38,1	141	183	8	1,77	190
55 GC	775,0	74 030	2 650	102	220	425	344	168	279	334	38,1	158	204	8	2,22	249
60 GC	947,0	90 400	2 450	115	244	457	384	188	305	366	25,4	169	229	8	3,18	306
70 GC	1 420,0	135 000	2 150	127	289	527	452	221	343	425	28,4	196	267	10	4,35	485
80 GC	1 780,0	170 000	1 750	102	266	591	508	249	356	572	–	243	300	10	9,53	703
90 GC	2 360,0	226 000	1 550	115	290	660	565	276	394	641	–	265	327	13	12,25	984
100 GC	3 250,0	310 000	1 450	127	320	711	623	305	445	699	–	294	356	13	14,97	1 302
110 GC	4 320,0	413 000	1 330	140	373	775	679	333	495	749	–	322	384	13	17,69	1 678
120 GC	5 810,0	555 000	1 200	153	400	838	719	353	546	826	–	341	403	13	20,87	2 114

* Minimum clearance required for aligning coupling.

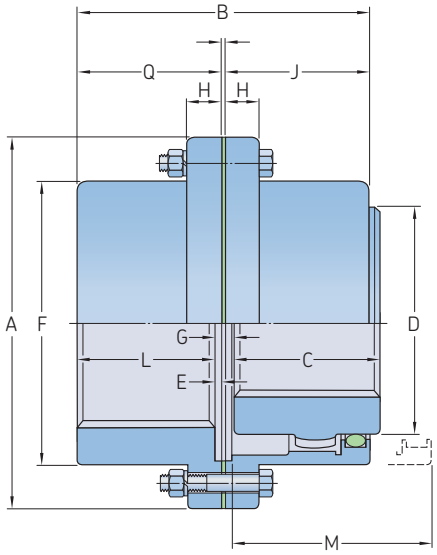

Size 10 to 70

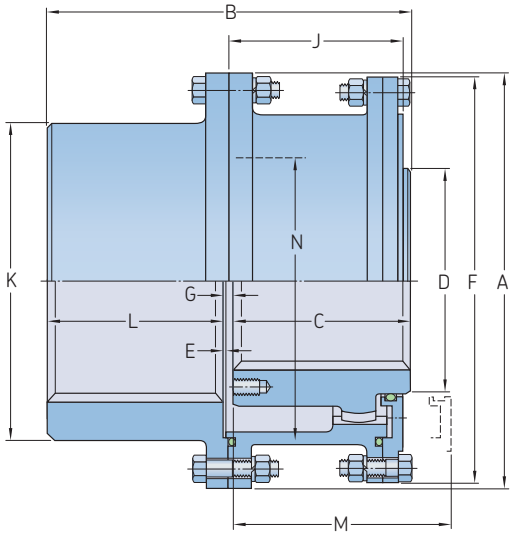

Size 80 to 120

Size	Power per 100 r/min	Rated torque	Speed	Bore diameter Flex hub	Bore diameter Se hub		Dimensions												Gap	Lubricant mass	Coupling mass without bore
							A	B	C	D	E	F	H	J	K[1]	L	M[2]	Q	G		
			Max.	Max.	Max.	Min.													Min.		
–	kW	Nm	r/min	mm			mm												mm	kg	
10 GCSE	11,9	1 139	8 000	48	60	13	116	87,0	43	69	2,5	84	14,0	39	–	40	51	42	4	0,02	4,5
15 GCSE	24,6	2 350	6 500	60	75	19	152	99,0	49	86	2,5	105	19,0	48	–	46	61	49	4	0,04	9,1
20 GCSE	44,7	4 270	5 600	73	92	25	178	124,0	62	105	2,5	126	19,0	59	–	58	77	61	4	0,07	15,9
25 GCSE	78,3	7 474	5 000	92	111	32	213	156,0	77	131	2,5	155	21,8	72	–	74	92	76	5	0,12	27,2
30 GCSE	127,0	12 100	4 400	105	130	38	240	184,0	91	152	2,5	180	21,8	84	–	88	107	90	5	0,18	43,1
35 GCSE	194,0	18 500	3 900	124	149	51	279	213,5	106	178	2,5	211	28,4	98	–	102	130	105	6	0,27	61,2
40 GCSE	321,0	30 609	3 600	146	171	64	318	243,0	121	210	4,1	245	28,4	111	–	115	145	119	7	0,47	99,8
45 GCSE	440,0	42 000	3 200	165	194	76	346	274,0	135	235	4,1	274	28,4	123	–	131	166	135	8	0,57	136,1
50 GCSE	593,0	56 600	2 900	178	222	89	389	309,0	153	254	5,1	306	38,1	141	–	147	183	152	9	0,91	195,0
55 GCSE	775,0	74 030	2 650	197	248	102	425	350,0	168	279	5,1	334	38,1	158	–	173	204	178	9	1,13	263,1
60 GCSE	947,0	90 400	2 450	222	267	114	457	384,0	188	305	6,6	366	25,4	169	–	186	229	193	10	1,70	324,3
70 GCSE	1 420,0	135 000	2 150	254	305	127	527	454,0	221	343	8,4	425	28,4	196	–	220	267	229	13	2,27	508,0
80 GCSE	1 780,0	170 000	1 750	279	343	102	591	511,0	249	356	–	572	–	243	450,8	249	300	–	13	4,99	698,5
90 GCSE	2 360,0	226 000	1 550	305	381	114	660	566,0	276	394	–	641	–	265	508,0	276	327	–	14	6,35	984,3
100 GCSE	3 250,0	310 000	1 450	343	406	127	711	626,0	305	445	–	699	–	294	530,4	305	356	–	16	7,71	1251,9
110 GCSE	4 320,0	413 000	1 330	387	445	140	775	682,0	333	495	–	749	–	322	584,2	333	384	–	16	9,07	1637,5
120 GCSE	5 810,0	555 000	1 200	425	495	152	838	722,0	353	546	–	826	–	341	647,7	353	403	–	16	10,89	2077,5

[1] May be an "as cast" version depending on coupling size and bore.
[2] Minimum clearance required for aligning coupling.

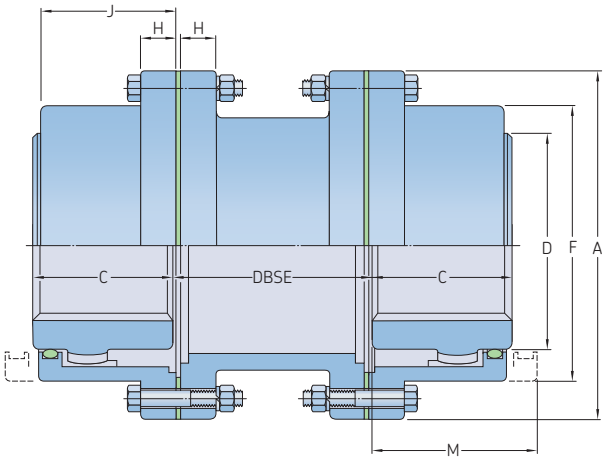

Size	Power per 100 r/min	Rated torque	Speed	DBSE		Bore diameter		Dimensions							Lubricant mass	Coupling mass without bore and min. bore
								A	C	D	F	H	J	M*		
			Max.	Min.	Max.	Min.	Max.									
–	kW	Nm	r/min	mm											kg	
10 GCS	11,9	1 139	7 000	83	311	13	48	116	43	69	84	14,0	39	51	0,04	6,8
15 GCS	24,6	2 350	5 500	83	311	19	60	152	49	86	105	19,0	48	61	0,07	13,6
20 GCS	44,7	4 270	4 600	83	311	25	73	178	62	105	126	19,0	59	77	0,12	20,4
25 GCS	78,3	7 474	4 000	95	311	32	92	213	77	131	155	21,8	72	92	0,23	38,6
30 GCS	127,0	12 100	3 600	95	311	38	105	240	91	152	180	21,8	84	107	0,36	54,4
35 GCS	194,0	18 500	3 100	120	311	51	124	279	106	178	211	28,4	98	130	0,54	88,5
40 GCS	321,0	30 609	2 800	120	311	64	146	318	121	210	245	28,4	111	145	0,91	122,5
45 GCS	440,0	42 000	2 600	120	311	76	165	346	135	235	274	28,4	123	166	1,04	165,6
50 GCS	593,0	56 600	2 400	146	311	89	178	389	153	254	306	38,1	141	183	1,77	238,1
55 GCS	775,0	74 030	2 200	146	311	102	197	425	168	279	334	38,1	158	204	2,22	306,2
60 GCS	947,0	90 400	2 100	146	311	114	222	457	188	305	366	25,4	169	229	3,18	358,3
70 GCS	1 420,0	135 000	1 800	146	311	127	254	527	221	343	425	28,4	196	267	4,35	562,5

* Minimum clearance required for aligning coupling.

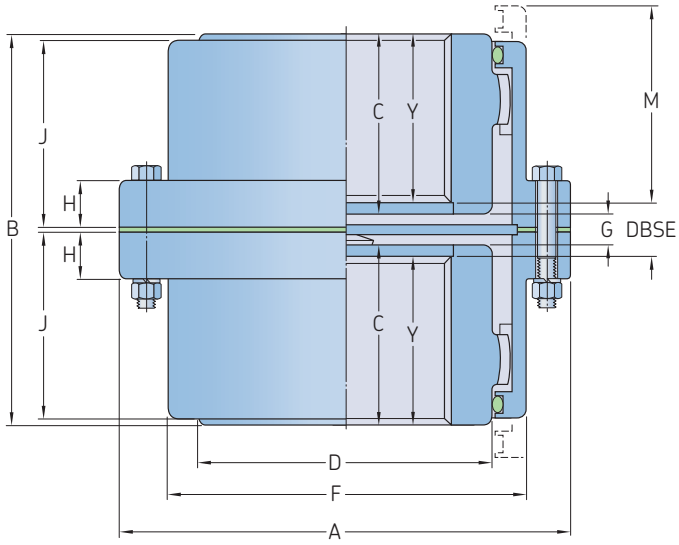

Size	Power per 100 r/min	Rated torque	Speed	Bore diameter		Dimensions										Gap	Lubricant mass	Coupling mass without bore
			Max.	Max.	Min.	A	B	C	D	F	H	J	M*	Y	DBSE	G Min.		
–	kW	Nm	r/min	mm		mm										mm	kg	
10 GCV	11,9	1 139	8 000	13	48	116	89	43	69	84	14,0	39	51	32,5	24	11	0,04	5
15 GCV	24,6	2 350	6 500	19	60	152	101	49	86	105	19,0	48	61	38,6	24	11	0,07	9
20 GCV	44,7	4 270	5 600	25	73	178	127	62	105	126	19,0	59	77	51,3	24	11	0,12	16
25 GCV	78,3	7 474	5 000	32	92	213	159	77	131	155	21,8	72	92	65,3	26	14	0,23	29
30 GCV	127,0	12 100	4 400	38	105	240	187	91	152	180	21,8	84	107	79,8	26	14	0,36	43
35 GCV	194,0	18 500	3 900	51	124	279	218	106	178	211	28,4	98	130	94,0	30	18	0,54	68
40 GCV	321,0	30 609	3 600	64	146	318	248	121	210	245	28,4	111	145	105,9	35	22	0,91	97
45 GCV	440,0	42 000	3 200	76	165	346	278	135	235	274	28,4	123	166	116,3	44	25	1,04	136
50 GCV	593,0	56 600	2 900	89	178	389	314	153	254	306	38,1	141	183	134,6	44	25	1,77	190
55 GCV	775,0	74 030	2 650	102	197	425	344	168	279	334	38,1	158	204	149,6	44	25	2,22	249
60 GCV	947,0	90 400	2 450	114	222	457	384	188	305	366	25,4	169	229	168,1	48	29	3,18	306
70 GCV	1 420,0	135 000	2 150	127	254	527	452	221	343	425	28,4	196	267	194,8	61	35	4,35	485

* Minimum clearance required for aligning coupling.

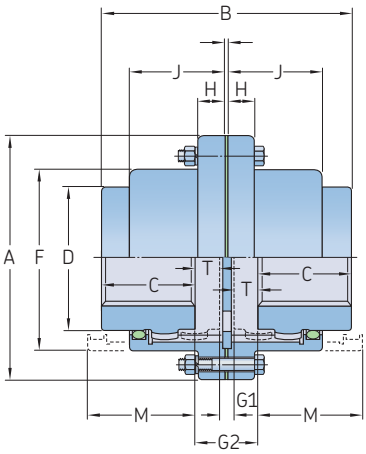

Type 1

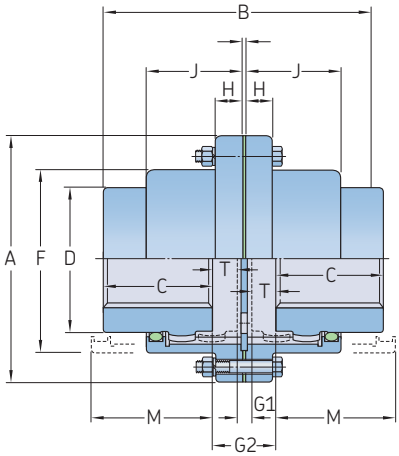

Type 2

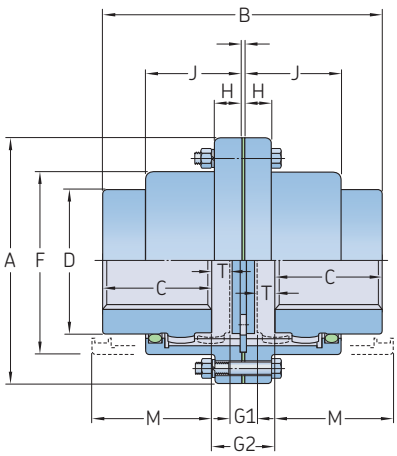

Type 3

Size	Power per 100 r/min	Rated torque	Speed	Dimensions								Lubricant mass	Coupling mass without bore
				Bore diameter		A	C	D	F	H	J		
			Max.	Min.	Max.								
–	kW	Nm	r/min	mm		mm						kg	
10 GCSL	11,9	1 139	5 300	13	48	116	43	69	84	14,0	39	0,02	5
15 GCSL	24,6	2 350	4 300	19	60	152	49	86	105	19,0	48	0,04	9
20 GCSL	44,7	4 270	3 700	25	73	178	62	105	126	19,0	59	0,06	16
25 GCSL	78,3	7 474	3 300	32	92	213	77	131	155	21,8	72	0,11	29
30 GCSL	127,0	12 100	2 900	38	105	240	91	152	180	21,8	84	0,18	43
35 GCSL	194,0	18 500	2 600	51	124	279	106	178	211	28,4	98	0,27	68
40 GCSL	321,0	30 609	2 400	64	146	318	121	210	245	28,4	111	0,45	97
45 GCSL	440,0	42 000	2 100	76	165	346	135	235	274	28,4	123	0,51	136
50 GCSL	593,0	56 600	1 900	89	178	389	153	254	306	38,1	141	0,91	190
55 GCSL	775,0	74 030	1 800	102	197	425	168	279	334	38,1	158	1,13	249
60 GCSL	947,0	90 400	1 600	114	222	457	188	305	366	25,4	169	1,19	306
70 GCSL	1 420,0	135 000	1 400	127	254	527	221	343	425	28,4	196	2,18	485

Size	Type 1						Type 2						Type 3					
	B Max.	M*	Half T Max.	Total	Gap G_1	G_2	B Max.	M*	Half T Max.	Total	Gap G_1	G_2	B Max.	M*	Half T Max.	Total	Gap G_1	G_2
–	mm						mm						mm					
10 GCSL	96	54	13	26	8	10	126	58	16	32	8	40	96	54	2,0	4	6	10
15 GCSL	127	60	10	20	8	29	152	69	23	46	8	54	127	60	7,5	15	14	29
20 GCSL	151	77	9	18	8	27	186	84	27	54	8	62	151	77	10,0	20	7	27
25 GCSL	188	93	12	24	9	34	231	102	34	68	9	78	188	93	6,0	12	21	34
30 GCSL	227	108	18	36	9	45	263	118	36	72	9	81	227	108	11,5	23	22	45
35 GCSL	274	124	25	50	11	61	313	135	45	90	11	102	274	124	14,0	28	33	61
40 GCSL	320	138	32	64	15	79	364	155	54	108	15	121	320	138	16,0	32	47	79
45 GCSL	355	154	35	70	16	86	406	163	60	120	16	136	355	154	19,0	38	47	86
50 GCSL	408	175	42	82	18	102	460	189	68	136	18	153	408	175	20,5	41	61	102
55 GCSL	470	191	58	116	18	134	510	221	78	156	18	174	470	191	21,0	42	92	134
60 GCSL	504	212	53	424	21	127	563	227	83	166	21	187	504	212	24,5	49	78	127
70 GCSL	592	245	62	490	26	150	669	235	99	198	26	223	592	245	27,0	54	96	150

* Minimum clearance required for aligning coupling.

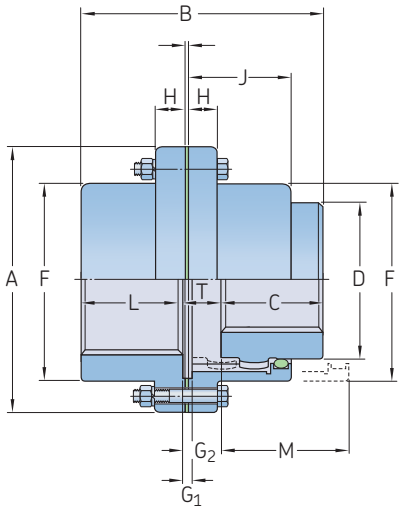

Type 1

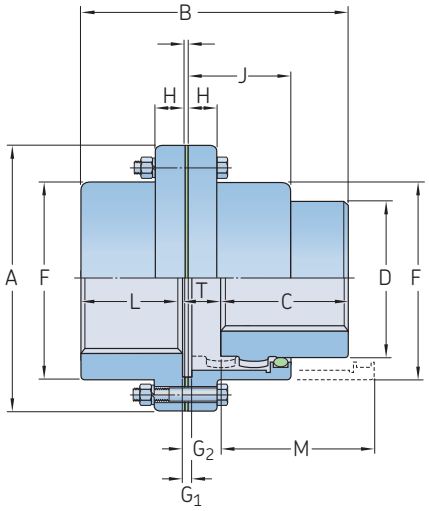

Type 2

Size	Power per 100 r/min	Rated torque	Speed	Dimensions Bore diameter Flex hub	Se hub		A	C	D	F	H	J	L	Lubricant mass	Coupling mass without bore
			Max.	Max.	Max.	Min.									
–	kW	Nm	r/min	mm			mm							kg	
10 GCSL	11,9	1 139	5 300	48	60	13	116	43	69	84	14,0	39	40	0,01	5
15 GCSL	24,6	2 350	4 300	60	75	19	152	49	86	105	19,0	48	46	0,02	9
20 GCSL	44,7	4 270	3 700	73	92	25	178	62	105	126	19,0	59	58	0,04	16
25 GCSL	78,3	7 474	3 300	92	111	32	213	77	131	155	21,8	72	74	0,06	29
30 GCSL	127,0	12 100	2 900	105	130	38	240	91	152	180	21,8	84	88	0,11	43
35 GCSL	194,0	18 500	2 600	124	149	51	279	106	178	211	28,4	98	102	0,18	68
40 GCSL	321,0	30 609	2 400	146	171	64	318	121	210	245	28,4	111	115	0,27	97
45 GCSL	440,0	42 000	2 100	165	194	76	346	135	235	274	28,4	123	131	0,34	136
50 GCSL	593,0	56 600	1 900	178	222	89	389	153	254	306	38,1	141	147	0,54	195
55 GCSL	775,0	74 030	1 800	197	248	102	425	168	279	334	38,1	158	173	0,73	263
60 GCSL	947,0	90 400	1 600	222	267	114	457	188	305	366	25,4	169	186	0,96	324
70 GCSL	1 420,0	135 000	1 400	254	305	127	527	221	343	425	28,4	196	220	1,36	510

Size	Type 1					Type 2				
	B Max.	M*	T Max.	Gap G_1	G_2	B Max.	M*	T Max.	Gap G_1	G_2
–	mm					mm				
10 GCSL	90,0	54	3,6	4	8	105	58	18,5	4	23
15 GCSL	112,0	60	12,7	4	17	125	69	25,4	4	30
20 GCSL	136,0	77	11,7	4	16	154	84	29,5	4	34
25 GCSL	170,0	93	14,5	5	19	192	102	36,3	5	41
30 GCSL	204,0	108	20,1	5	25	222	118	38,1	5	43
35 GCSL	241,0	124	27,2	6	33	262	135	47,8	6	53
40 GCSL	279,0	138	36,3	7	43	300	155	57,4	7	65
45 GCSL	315,0	154	38,9	8	47	338	163	64,0	8	72
50 GCSL	356,0	175	47,0	9	56	382	189	72,6	9	81
55 GCSL	412,5	191	63,0	9	72	433	221	83,1	9	92
60 GCSL	445,0	212	59,7	10	70	475	227	89,4	10	100
70 GCSL	524,0	245	70,4	13	83	560	235	106,7	13	119

* Minimum clearance required for aligning coupling.

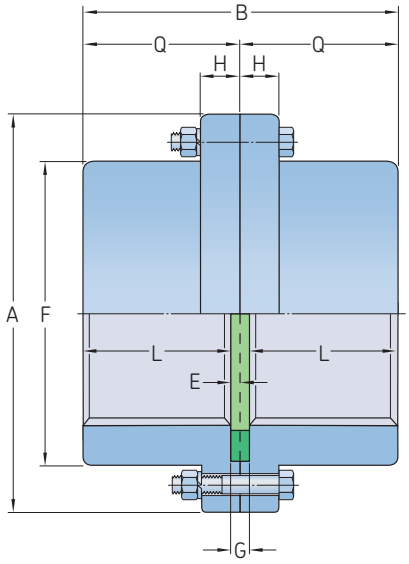

Size	Power per 100 r/min	Rated torque	Speed	Dimensions Bore diameter									Gap	Coupling mass without bore
			Max.	Min.	Max.	A	B	E	F	H	L	Q	G	
–	kW	Nm	r/min	mm		mm							mm	kg
10 GCR	11,9	1 139	8 000	13	60	116	84,5	2,5	84	14,0	40,0	39	5	5
15 GCR	24,6	2 350	6 500	19	75	152	97,5	2,5	105	19,0	46,0	48	5	9
20 GCR	44,7	4 270	5 600	25	92	178	122,0	2,5	126	19,0	58,5	59	5	16
25 GCR	78,3	7 474	5 000	32	111	213	152,5	2,5	155	21,8	73,5	72	5	28
30 GCR	127,0	12 100	4 400	38	130	240	181,0	2,5	180	21,8	88,0	84	5	43
35 GCR	194,0	18 500	3 900	51	149	279	209,0	2,5	211	28,4	102,0	98	5	68
40 GCR	321,0	30 609	3 600	64	171	318	239,0	4,1	245	28,4	115,0	111	8	102
45 GCR	440,0	42 000	3 200	76	194	346	269,0	4,1	274	28,4	130,5	123	8	140
50 GCR	593,0	56 600	2 900	89	222	389	305,0	5,1	306	38,1	147,5	141	10	205
55 GCR	775,0	74 030	2 650	102	248	425	355,5	5,1	334	38,1	172,5	158	10	280
60 GCR	947,0	90 400	2 450	114	267	457	386,0	6,6	366	25,4	186,5	169	13	335
70 GCR	1 420,0	135 000	2 150	127	305	527	457,0	8,4	425	28,4	220,0	196	17	536
80 GCR	1 780,0	170 000	1 750	102	343	591	514,0	8,0	572	31,5	249,0	243	16	703
90 GCR	2 360,0	226 000	1 550	114	381	660	568,0	8,0	641	38,0	276,0	265	16	984
100 GCR	3 250,0	310 000	1 450	127	406	711	629,0	9,7	699	44,2	305,0	294	19	1 210
110 GCR	4 320,0	413 000	1 330	140	445	775	686,0	9,7	749	50,8	333,0	322	19	1 610
120 GCR	5 810,0	555 000	1 200	152	495	838	724,0	9,7	826	53,8	353,0	341	19	2 114

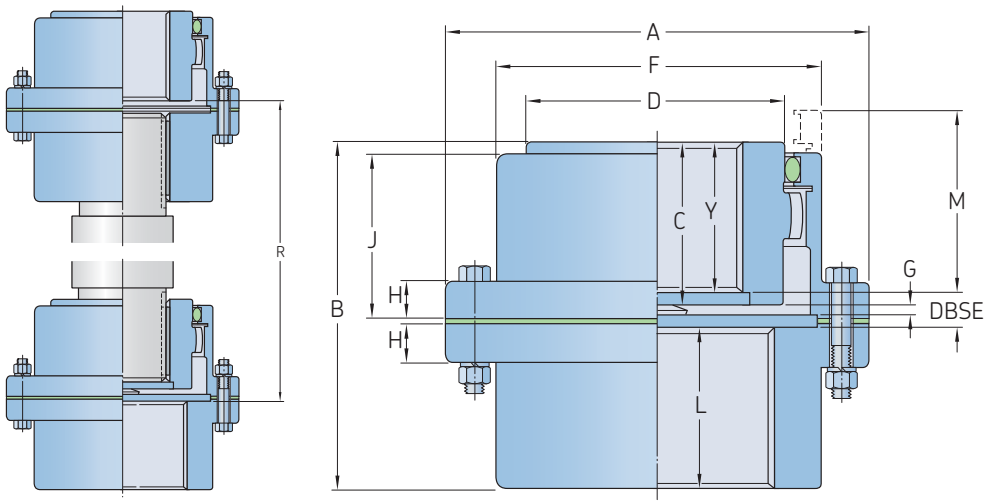

Size	Power per 100 r/min	Rated torque	Speed	Bore diameter Flex hub	Bore diameter Se hub		Dimensions												Gap	Lubricant mass	Coupling mass without bore
			Max.	Max.	Max.	Min.	A	B	C	D	F	H	J	L	M	R	Y	DBSE	G		
–	kW	Nm	r/min	mm			mm												mm	kg	
10 GCV	11,9	1 139	7 000	48	60	13	116	87,0	43	69	84	14,0	39	40	51	132	32,5	14,7	4	0,02	4,5
15 GCV	24,6	2 350	5 500	60	75	19	152	99,0	49	86	105	19,0	48	46	61	152	38,6	14,7	4	0,04	9,1
20 GCV	44,7	4 270	4 600	73	92	25	178	124,0	62	105	126	19,0	59	58	77	183	51,3	14,7	4	0,07	15,9
25 GCV	78,3	7 474	4 000	92	111	32	213	156,0	77	131	155	21,8	72	74	92	218	65,3	16,3	5	0,12	27,2
30 GCV	127,0	12 100	3 600	105	130	38	240	184,0	91	152	180	21,8	84	88	107	248	79,8	16,3	5	0,18	43,1
35 GCV	194,0	18 500	3 100	124	149	51	279	213,5	106	178	211	28,4	98	102	130	298	94,0	18,0	6	0,27	61,2
40 GCV	321,0	30 609	2 800	146	171	64	318	243,0	121	210	245	28,4	111	115	145	340	105,9	22,0	7	0,47	99,8
45 GCV	440,0	42 000	2 600	165	194	76	346	274,0	135	235	274	28,4	123	131	166	388	116,3	26,7	8	0,57	136,1
50 GCV	593,0	56 600	2 400	178	222	89	389	309,0	153	254	306	38,1	141	147	183	424	134,6	27,7	9	0,91	195,0
55 GCV	775,0	74 030	2 200	197	248	102	425	350,0	168	279	334	38,1	158	173	204	464	149,6	27,7	9	1,13	263,1
60 GCV	947,0	90 400	2 100	222	267	114	457	384,0	188	305	366	25,4	169	186	229	522	168,1	30,9	10	1,70	324,3
70 GCV	1 420,0	135 000	1 800	254	305	127	527	454,0	221	343	425	28,4	196	220	267	615	194,8	39,1	13	2,27	508,0

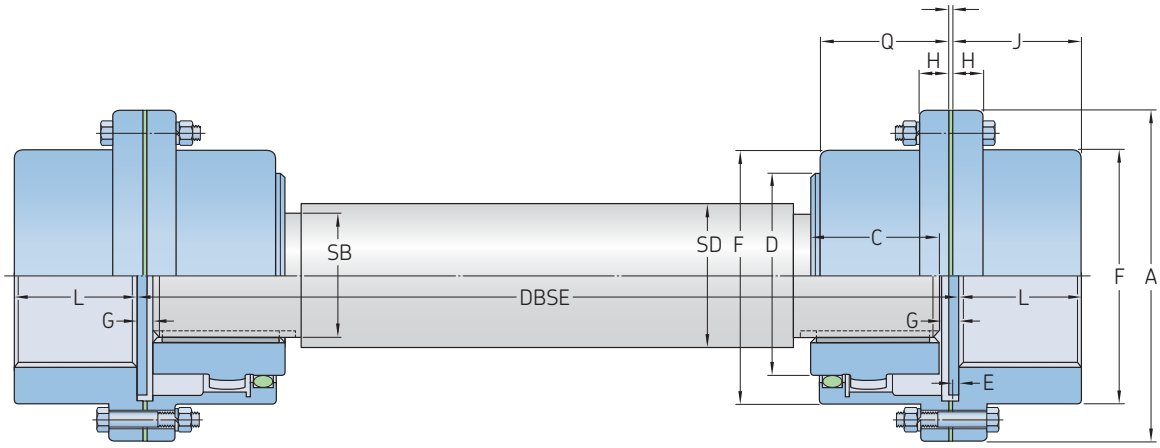

Flex hub on floating shaft

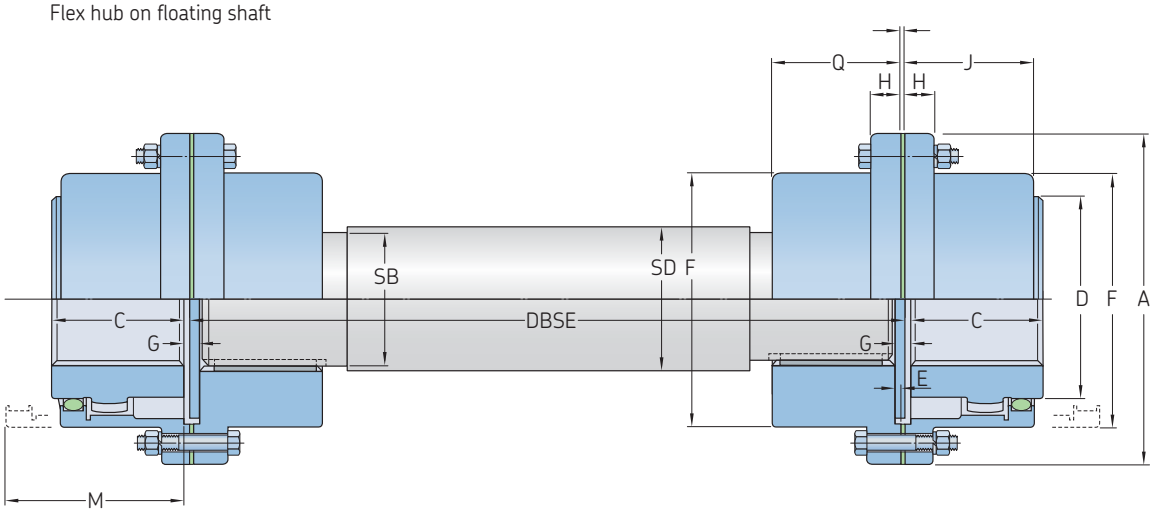

Rigid hubs on floating shaft

Size	DBSE Flex hub Min.	DBSE Rigid hub Max.	Bore diameter Flex hub Max.	Bore diameter Rigid hub Max.	Bore diameter Min.	Dimensions A	C	D	F	H	J	L	M	Gap G	Min lubricant mass	Coupling mass without bore
–	mm														kg	
10 GCFS	133	92	48	60	13	116	43	69	84	14,0	39	40	51	4	0,02	4,5
15 GCFS	159	105	60	75	19	152	49	86	105	19,0	48	46	61	4	0,04	9,1
20 GCFS	197	129	73	92	25	178	62	105	126	19,0	59	58	77	4	0,07	15,9
25 GCFS	241	162	92	111	32	213	77	131	155	21,8	72	74	92	5	0,12	27,2
30 GCFS	279	189	105	130	38	240	91	152	180	21,8	84	88	107	5	0,18	43,1
35 GCFS	324	219	124	149	51	279	106	178	211	28,4	98	102	130	6	0,27	61,2
40 GCFS	419	248	146	171	64	318	121	210	245	28,4	111	115	145	7	0,47	99,8
45 GCFS	508	281	165	194	76	346	135	235	274	28,4	123	131	166	8	0,57	136,1
50 GCFS	533	316	178	222	89	389	153	254	306	38,1	141	147	183	9	0,91	195,0
55 GCFS	572	367	197	248	102	425	168	279	334	38,1	158	173	204	9	1,13	263,1
60 GCFS	597	397	222	267	114	457	188	305	366	25,4	169	186	229	10	1,70	324,3
70 GCFS	673	470	254	305	127	527	221	343	425	28,4	196	220	267	13	2,27	508,0

SKF Flex couplings are designed to accommodate misalignment and shock loads and dampen vibration levels. These easy to install, maintenance-free couplings are available with either a machined-to-size or tapered bore.

Couplings with a tapered bore can be Face (F) mounted or Hub (H) mounted. The more versatile Reversible (R) design can be either face or hub mounted depending on the application. These couplings are also available with a tapered bushing.

SKF Flex couplings consist of 2 flanges and 1 tyre. The flanges are phosphate coated for improved corrosion resistance. The addition of a standard sized spacer flange can be used to accommodate applications where it is advantageous to move either shaft axially without disturbing driving or driven machines.

SKF Flex tyres are available in natural rubber compounds for applications ranging from –50 to +50 °C. Chloroprene rubber compounds should be used in applications where exposure to greases and oils are likely. These compounds can accommodate temperatures ranging from –15 to +70 °C. The chloroprene tyres should be used where fire-resistance and anti-static (F.R.A.S.) properties are required.

Assembled coupling characteristics

Coupling size	Maximum speed	Mass tyre	Inertia	Torsional stiffness	Misalignment			Nominal torque	Max torque	Screw size	Clamping screw torque
					Angular	Parallel	Axial				
–	r/min	kg	kg/m²	Nm/°	°	mm		Nm		–	Nm
40	4 500	0,1	0,00074	5	4	1,1	1,3	24	64	M6	15
50	4 500	0,3	0,00115	13	4	1,3	1,7	66	160	M6	15
60	4 000	0,5	0,0052	26	4	1,6	2,0	127	318	M6	15
70	3 600	0,7	0,009	41	4	1,9	2,3	250	487	M8	24
80	3 100	1,0	0,017	63	4	2,1	2,6	375	759	M8	24
90	3 000	1,1	0,031	91	4	2,4	3,0	500	1 096	M10	40
100	2 600	1,1	0,054	126	4	2,6	3,3	675	1 517	M10	40
110	2 300	1,4	0,078	178	4	2,9	3,7	875	2 137	M10	40
120	2 050	2,3	0,013	296	4	3,2	4,0	1 330	3 547	M12	50
140	1 800	2,6	0,255	470	4	3,7	4,6	2 325	5 642	M12	55
160	1 600	3,4	0,38	778	4	4,2	5,3	3 770	9 339	M16	80
180	1 500	7,7	0,847	1 371	4	4,8	6,0	6 270	16 455	M16	105
200	1 300	8,0	1,281	1 959	4	5,3	6,6	9 325	23 508	M16	120
220	1 100	10,0	2,104	2 760	4	5,8	7,3	11 600	33 125	M20	165
250	1 000	15,0	3,505	3 562	4	6,6	8,2	14 675	42 740	M20	165

Order data

Coupling type	Flanges	Qty	Element	Qty	Coupling bushing number	Qty	Spacer flange and shaft*	Qty	Spacer bushing number	Qty
RSB both sides	PHE F70RSBFLG	2	PHE F70NRTYRE or	1	–	–	–	–	–	–
	–	–	PHE F70FRTYRE	–	–	–	–	–	–	–
RSB/F combination	PHE F70RSBFLG	1	PHE F70NRTYRE or	1	–	–	–	–	–	–
	PHE F70FTBFLG	1	PHE F70FRTYRE	–	PHF TB2012X...MM	1	PHE SM25–...DBSE	1	PHF 2517X...MM	1
RSB/H combination	PHE F70RSBFLG	1	PHE F70NRTYRE or	1	–	–	–	–	–	–
	PHE F70HTBFLG	1	PHE F70FRTYRE	–	PHF TB1610X...MM	1	PHE SM25–...DBSE	1	PHF 2517X...MM	1
F/F combination	PHE F70FTBFLG	1	PHE F70NRTYRE or	1	PHF TB2012X...MM	1	PHE SM25–...DBSE	1	PHF 2517X...MM	1
	PHE F70FTBFLG	1	PHE F70FRTYRE	–	PHF TB2012X...MM	1	–	–	–	–
H/H combination	PHE F70HTBFLG	1	PHE F70NRTYRE or	1	PHF TB1610X...MM	1	PHE SM25–...DBSE	1	PHF 2517X...MM	1
	PHE F70HTBFLG	1	PHE F70FRTYRE	–	PHF TB1610X...MM	1	–	–	–	–
F/H combination	PHE F70FTBFLG	1	PHE F70NRTYRE or	1	PHF TB1610X...MM	1	PHE SM25–...DBSE	1	PHF 2517X...MM	1
	PHE F70HTBFLG	1	PHE F70FRTYRE	–	PHF TB2012X...MM	1	–	–	–	–
Reversible	PHE F70RTBFLG	2	PHE F70NRTYRE	1	PHF TB1610X...MM	2	–	–	–	–

* To complete designation, add distance between shaft ends. PHE SM25-100DBSE.
An SKF Flex coupling consists of 2 flanges and 1 tyre. An SKF Flex spacer coupling consists of 2 flanges, 1 tyre and 1 spacer (spacer part number consists of spacer shaft and rigid flange).

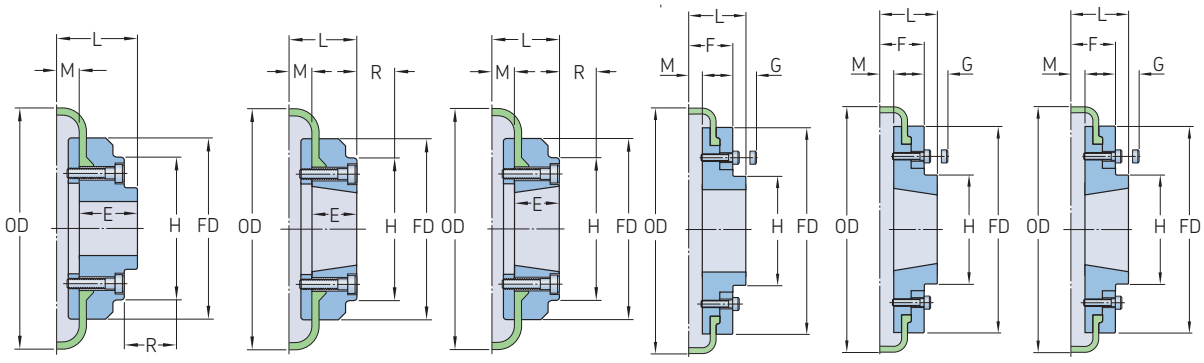

Sizes 40 to 60
Type B | Type F | Type H

Sizes 70 to 250
Type B | Type F | Type H

Size	Type	Bushing number	Bore Min.	Bore Max.	Dimensions Types F & H L	Dimensions Types F & H E	Type B L	Type B E	Key screw	OD	FD	H	F	R[1]	G[2]	M	Mass	Inertia	Designation	Tyre designation Natural	F.R.A.S
mm	–	–	mm														kg	kg/m²	–		
40	B	–	11	30	–	–	33,0	22	M5	104	82,0	–	–	29	–	11,0	0,8	0,000074	**PHE F40RSBFLG**	**PHE F40NRTYRE**	**PHE F40FRTYRE**
40	F	1008	9	25	33,0	22	–	–	–	104	82,0	–	–	29	–	11,0	0,8	0,000074	**PHE F40FTBFLG**	**PHE F40NRTYRE**	**PHE F40FRTYRE**
40	H	1008	9	25	33,0	22	–	–	–	104	82,0	–	–	29	–	11,0	0,8	0,000074	**PHE F40HTBFLG**	**PHE F40NRTYRE**	**PHE F40FRTYRE**
50	B	–	16	38	–	–	45,0	32	M5	133	100,0	79	–	38	–	12,5	1,2	0,000115	**PHE F50RSBFLG**	**PHE F50NRTYRE**	**PHE F50FRTYRE**
50	F	1210	11	32	37,5	25	–	–	–	133	100,0	79	–	38	–	12,5	1,2	0,000115	**PHE F50FTBFLG**	**PHE F50NRTYRE**	**PHE F50FRTYRE**
50	H	1210	11	32	37,5	25	–	–	–	133	100,0	79	–	38	–	12,5	1,2	0,000115	**PHE F50HTBFLG**	**PHE F50NRTYRE**	**PHE F50FRTYRE**
60	B	–	16	45	–	–	55,0	38	M6	165	125,0	70	–	38	–	16,5	2,0	0,000520	**PHE F60RSBFLG**	**PHE F60NRTYRE**	**PHE F60FRTYRE**
60	F	1610	14	42	41,5	25	–	–	–	165	125,0	103	–	38	–	16,5	2,0	0,000520	**PHE F60FTBFLG**	**PHE F60NRTYRE**	**PHE F60FRTYRE**
60	H	1610	14	42	41,5	25	–	–	–	165	125,0	103	–	38	–	16,5	2,0	0,000520	**PHE F60HTBFLG**	**PHE F60NRTYRE**	**PHE F60FRTYRE**
70	B	–	17	60	–	–	47,0	35	M10	187	142,0	80	50	–	13	11,5	3,1	0,000900	**PHE F70RSBFLG**	**PHE F70NRTYRE**	**PHE F70FRTYRE**
70	F	2012	14	50	43,5	32	–	–	–	187	142,0	80	50	42	13	11,5	3,1	0,000900	**PHE F70FTBFLG**	**PHE F70NRTYRE**	**PHE F70FRTYRE**
70	H	1610	14	42	36,5	25	–	–	–	187	142,0	80	50	38	13	11,5	3,0	0,000900	**PHE F70HTBFLG**	**PHE F70NRTYRE**	**PHE F70FRTYRE**
80	B	–	23	63	–	–	55,0	42	M10	211	165,0	98	54	–	16	12,5	4,9	0,018000	**PHE F80RSBFLG**	**PHE F80NRTYRE**	**PHE F80FRTYRE**
80	F	2517	16	60	57,5	45	–	–	–	211	165,0	97	54	48	16	12,5	4,9	0,018000	**PHE F80FTBFLG**	**PHE F80NRTYRE**	**PHE F80FRTYRE**
80	H	2012	14	50	44,5	32	–	–	–	211	165,0	98	54	32	16	12,5	4,6	0,017000	**PHE F80HTBFLG**	**PHE F80NRTYRE**	**PHE F80FRTYRE**
90	B	–	30	75	–	–	62,5	49	M12	235	187,0	112	60	–	16	13,5	7,1	0,032000	**PHE F90RSBFLG**	**PHE F90NRTYRE**	**PHE F90FRTYRE**
90	F	2517	16	60	58,5	45	–	–	–	235	187,0	108	60	48	16	13,5	7,0	0,031000	**PHE F90FTBFLG**	**PHE F90NRTYRE**	**PHE F90FRTYRE**
90	H	2517	16	60	58,5	45	–	–	–	235	187,0	108	60	48	16	13,5	7,0	0,031000	**PHE F90HTBFLG**	**PHE F90NRTYRE**	**PHE F90FRTYRE**
100	B	–	30	80	–	–	69,5	56	M12	254	214,0	125	62	–	16	13,5	9,9	0,055000	**PHE F100RSBFLG**	**PHE F100NRTYRE**	**PHE F100FRTYRE**
100	F	3020	25	75	64,5	51	–	–	–	254	214,0	120	62	55	16	13,5	9,9	0,055000	**PHE F100FTBFLG**	**PHE F100NRTYRE**	**PHE F100FRTYRE**
100	H	2517	16	60	58,5	45	–	–	–	254	214,0	113	62	48	16	13,5	9,4	0,054000	**PHE F100HTBFLG**	**PHE F100NRTYRE**	**PHE F100FRTYRE**
110	B	–	30	90	–	–	75,5	63	M12	279	232,0	128	62	–	16	12,5	12,5	0,081000	**PHE F110RSBFLG**	**PHE F110NRTYRE**	**PHE F110FRTYRE**
110	F	3020	25	75	63,5	51	–	–	–	279	232,0	134	62	55	16	12,5	11,7	0,078000	**PHE F110FTBFLG**	**PHE F110NRTYRE**	**PHE F110FRTYRE**
110	H	3020	25	75	63,5	51	–	–	–	279	232,0	134	62	55	16	12,5	11,7	0,078000	**PHE F110HTBFLG**	**PHE F110NRTYRE**	**PHE F110FRTYRE**
120	B	–	36	100	–	–	84,5	70	M16	314	262,0	143	67	–	16	14,5	16,9	0,137000	**PHE F120RSBFLG**	**PHE F120NRTYRE**	**PHE F120FRTYRE**
120	F	3525	35	100	79,5	65	–	–	–	314	262,0	140	67	67	16	14,5	16,5	0,137000	**PHE F120FTBFLG**	**PHE F120NRTYRE**	**PHE F120FRTYRE**
120	H	3020	25	75	65,5	51	–	–	–	314	262,0	140	67	55	16	14,5	15,9	0,130000	**PHE F120HTBFLG**	**PHE F120NRTYRE**	**PHE F120FRTYRE**
140	B	–	60	125	–	–	110,5	94	M20	359	312,5	180	73	–	17	16,0	22,2	0,254000	**PHE F140RSBFLG**	**PHE F140NRTYRE**	**PHE F140FRTYRE**
140	F	3525	35	100	81,0	65	–	–	–	359	312,5	180	73	67	17	16,0	22,3	0,255000	**PHE F140FTBFLG**	**PHE F140NRTYRE**	**PHE F140FRTYRE**
140	H	3525	35	100	81,0	65	–	–	–	359	312,5	180	73	67	17	16,0	22,3	0,255000	**PHE F140HTBFLG**	**PHE F140NRTYRE**	**PHE F140FRTYRE**
160	B	–	65	140	–	–	117,0	102	M20	402	348,0	197	78	–	19	15,0	35,8	0,469000	**PHE F160RSBFLG**	**PHE F160NRTYRE**	**PHE F160FRTYRE**
160	F	4030	40	115	91,0	76	–	–	–	402	348,0	197	78	80	19	15,0	32,5	0,380000	**PHE F160FTBFLG**	**PHE F160NRTYRE**	**PHE F160FRTYRE**
160	H	4030	40	115	91,0	76	–	–	–	402	348,0	197	78	80	19	15,0	32,5	0,380000	**PHE F160HTBFLG**	**PHE F160NRTYRE**	**PHE F160FRTYRE**
180	B	–	70	150	–	–	137,0	114	M20	470	396,0	205	94	–	19	23,0	49,1	0,871000	**PHE F180RSBFLG**	**PHE F180NRTYRE**	**PHE F180FRTYRE**
180	F	4535	55	125	112,0	89	–	–	–	470	396,0	205	94	89	19	23,0	42,2	0,847000	**PHE F180FTBFLG**	**PHE F180NRTYRE**	**PHE F180FRTYRE**
180	H	4535	55	125	112,0	89	–	–	–	470	396,0	205	94	89	19	23,0	42,2	0,847000	**PHE F180HTBFLG**	**PHE F180NRTYRE**	**PHE F180FRTYRE**
200	B	–	75	150	–	–	138,0	114	M20	508	432,0	205	103	–	19	24,0	58,2	1,301000	**PHE F200RSBFLG**	**PHE F200NRTYRE**	**PHE F200FRTYRE**
200	F	4535	55	125	113,0	89	–	–	–	508	432,0	205	103	89	19	24,0	53,6	1,281000	**PHE F200FTBFLG**	**PHE F200NRTYRE**	**PHE F200FRTYRE**
200	H	4535	55	125	113,0	89	–	–	–	508	432,0	205	103	89	19	24,0	53,6	1,281000	**PHE F200HTBFLG**	**PHE F200NRTYRE**	**PHE F200FRTYRE**
220	B	–	80	160	–	–	154,5	127	M20	562	472,0	224	118	–	20	27,5	79,6	2,142000	**PHE F220RSBFLG**	**PHE F220NRTYRE**	**PHE F220FRTYRE**
220	F	5040	70	125	129,5	102	–	–	–	562	472,0	224	118	92	20	27,5	72,0	2,104000	**PHE F220FTBFLG**	**PHE F220NRTYRE**	**PHE F220FRTYRE**
220	H	5040	70	125	129,5	102	–	–	–	562	472,0	224	118	92	20	27,5	72,0	2,104000	**PHE F220HTBFLG**	**PHE F220NRTYRE**	**PHE F220FRTYRE**
250	B	–	90	190	–	–	161,5	132	M20	628	532,0	254	125	–	25	29,5	104,0	3,505000	**PHE F250RSBFLG**	**PHE F250NRTYRE**	**PHE F250FRTYRE**

[1] The clearance required to allow tightening of the clamping screws and the taper bushing. Use of a shortened wrench will reduce this dimension.
[2] The amount by which the clamping screws need to be withdrawn to release the tyre.
For coupling sizes 70, 80, 100 and 120, "F" flanges require a larger bushing than "H" flanges.
Mass and inertia figures are for a single flange with midrange bore and include clamping ring, screws, washers and half tyre.

SKF Flex spacer coupling

The SKF Flex coupling spacer is used to join two shafts ends that cannot be positioned close enough to allow use of just a coupling.

The spacer also allows removal of a shaft without the need to move either the driving or the driven machine. For example, this allows easy and fast replacement of impellers in pump applications.

Coupling size	Distance between shaft ends (DBSE) Nominal		Spacer bushing number	Bore		Coupling bushing number	Bore		Designation
	Min.	Max.		Min.	Max.		Min.	Max.	
mm									–
40	80	90	1210	11	32	1008	9	25	**PHE SM12-80DBSE**
40	100	110	1210	11	32	1008	9	25	**PHE SM12-100DBSE**
40	100	113	1615	14	42	1008	9	25	**PHE SM16-100DBSE**
40	140	150	1615	14	42	1008	9	25	**PHE SM16-140DBSE**
50	100	116	1615	14	42	1210	11	32	**PHE SM16-100DBSE**
50	140	156	1615	14	42	1210	11	32	**PHE SM16-140DBSE**
60	100	124	1615	14	42	1610	14	42	**PHE SM16-100DBSE**
60	140	164	1615	14	42	1610	14	42	**PHE SM16-140DBSE**
70	100	114	2517	16	60	2012	14	50	**PHE SM25-100DBSE**
70	140	154	2517	16	60	2012	14	50	**PHE SM25-140DBSE**
70	180	194	2517	16	60	2012	14	50	**PHE SM25-180DBSE**
80	100	117	2517	16	60	2517	16	60	**PHE SM25-100DBSE**
80	140	157	2517	16	60	2517	16	60	**PHE SM25-140DBSE**
80	180	197	2517	16	60	2517	16	60	**PHE SM25-180DBSE**
90	140	158	2517	16	60	2517	16	60	**PHE SM25-140DBSE**
90	180	198	2517	16	60	2517	16	60	**PHE SM25-180DBSE**
100	140	158	3020	25	75	3020	25	75	**PHE SM30-140DBSE**
100	180	198	3020	25	75	3020	25	75	**PHE SM30-180DBSE**
110	140	156	3020	25	75	3020	25	75	**PHE SM30-140DBSE**
110	180	196	3020	25	75	3020	25	75	**PHE SM30-180DBSE**
120	140	160	3525	35	100	3525	35	100	**PHE SM35-140DBSE**
120	180	200	3525	35	100	3525	35	100	**PHE SM35-180DBSE**
140	140	163	3525	35	100	3525	35	100	**PHE SM35-140DBSE**
140	180	203	3525	35	100	3525	35	100	**PHE SM35-180DBSE**

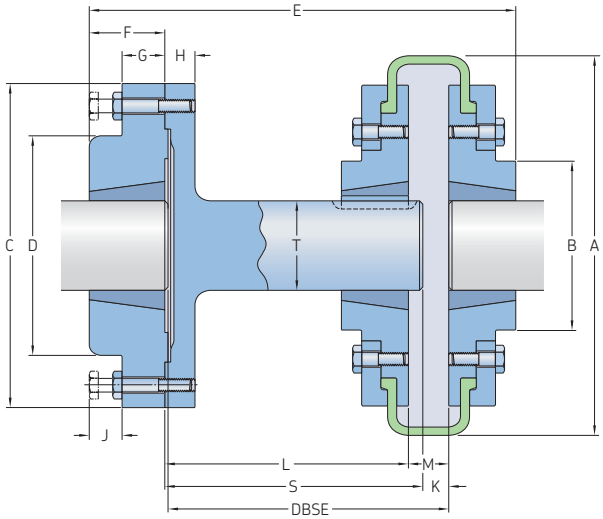

Coupling size	Dimensions														Designation
	A	B	C	D	E	F	G	H	J	K	L	M	S	T	
mm															–
40	104	82	118	83	134	25	14	15	14	6	65	22	77	25	**PHE SM12-80DBSE**
40	104	82	118	83	140	25	14	15	14	22	77	22	77	25	**PHE SM12-100DBSE**
40[1]	104	82	127	80	157	38	18	15	14	9	88	22	94	32	**PHE SM16-100DBSE**
40[1]	104	82	127	80	187	38	18	15	14	9	128	22	134	32	**PHE SM16-140DBSE**
50	133	79	127	80	160	38	18	15	14	9	85	25	94	32	**PHE SM16-100DBSE**
50	133	79	127	80	200	38	18	15	14	9	125	25	134	32	**PHE SM16-140DBSE**
60	165	103	127	80	161	38	18	15	14	9	78	33	94	32	**PHE SM16-100DBSE**
60	165	103	127	80	201	38	18	15	14	9	118	33	134	32	**PHE SM16-140DBSE**
70[2]	187	80	178	123	180	45	22	16	14	9	80	23	94	48	**PHE SM25-100DBSE**
70[2]	187	80	178	123	220	45	22	16	14	9	120	23	174	48	**PHE SM25-140DBSE**
70[2]	187	80	178	123	260	45	22	16	14	9	160	23	174	48	**PHE SM25-180DBSE**
80	211	95	178	123	193	45	22	16	14	9	78	25	94	48	**PHE SM25-100DBSE**
80	211	95	178	123	233	45	22	16	14	9	118	25	134	48	**PHE SM25-140DBSE**
80	211	95	178	123	273	45	22	16	14	9	158	25	174	48	**PHE SM25-180DBSE**
90	235	108	178	123	233	45	22	16	14	9	116	27	134	48	**PHE SM25-140DBSE**
90	235	108	178	123	273	45	22	16	14	9	156	27	174	48	**PHE SM25-180DBSE**
100	254	120	216	146	245	51	29	20	17	9	116	27	134	60	**PHE SM30-140DBSE**
100	254	120	216	146	285	51	29	20	17	9	156	27	174	60	**PHE SM30-180DBSE**
110	279	134	216	146	245	51	29	20	17	9	118	25	134	60	**PHE SM30-140DBSE**
110	279	134	216	146	285	51	29	20	17	9	158	25	174	60	**PHE SM30-180DBSE**
120	314	140	248	178	272	63	34	20	17	9	114	29	134	80	**PHE SM35-140DBSE**
120	314	140	248	178	312	63	34	20	17	9	154	29	174	80	**PHE SM35-180DBSE**
140	359	178	248	178	271	63	34	20	17	9	111	27	134	80	**PHE SM35-140DBSE**
140	359	178	248	178	312	63	34	20	17	9	151	27	174	80	**PHE SM35-180DBSE**

[1] F40 "B" Flange must be used to fit spacer shaft
[2] "F" Flange must be used to fit spacer shaft

Chain couplings are able to transmit higher torque than their shafts, making them ideal for high torque applications. Available with a pilot bore, finished bore or tapered bushing (face or hub), flanges are linked together with duplex roller chains enabling them to accommodate up to 2 degrees of misalignment.

To provide maximum service life and reliability, particularly for high speed applications, SKF recommends fitting all chain couplings with a cover and lubricating them properly. If a chain coupling is to be subjected to reversing operations, shock or pulsating loads, or other severe operating conditions, select a coupling one size larger than normal.

Coupling covers

Cover size	Aluminium D	Aluminium W	Weight	Plastic D	Plastic W	Weight
–	mm		kg	mm		kg
IS0816[1]	101,6	50,8	0,42	101,6	58,7	0,90
IS1016[1]	130,2	60,3	0,59	130,2	66,7	1,32
IS1018[1]	130,2	60,3	0,59	130,2	66,7	1,32
IS1218[1]	161,9	74,6	1,20	175,0	77,8	1,98
IS1220[1]	161,9	74,6	1,20	175,0	77,8	1,98
IS1222[1]	208,0	101,6	1,45	175,0	77,8	2,22
IS1618[1]	208,0	101,6	1,45	210,0	106,0	2,22
IS1620[1]	208,0	101,6	1,45	210,0	106,0	2,22
IS2018	257,2	133,4	4,80	238,1	150,8	3,97
IS2020	257,2	133,4	4,80	257,2	133,4	5,74
IS2418	288,9	187,3	8,10	288,9	187,3	7,47
IS2422	336,6	201,6	9,20	336,6	201,6	8,85

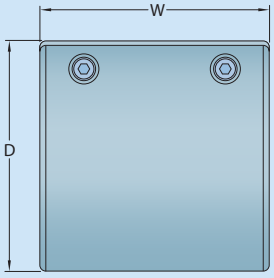

[1] Will be supplied in plastic unless otherwise specified

Order data

Size	Hub											Chain		Covers	
	Plain Bore	Qty		FTB[1]	Qty		HTB[1]	Qty		Bored to size[2]	Qty		Qty		Qty
816	PHE IS0816RSB	2	and/or	PHE IS0816FTB	2	and/or	PHE IS0816HTB	2	and/or	PHE IS0816X...	2	PHE IS0816CHN	1	PHE IS0816COVER	1
1016	PHE IS1016RSB	2	and/or	–	2		–	2		PHE IS1016X...	2	PHE IS1016CHN	1	PHE IS1016COVER	1
1018	PHE IS1018RSB	2	and/or	PHE IS1018FTB	2	and/or	PHE IS1018HTB	2	and/or	PHE IS1018X...	2	PHE IS1018CHN	1	PHE IS1018COVER	1
1218	PHE IS1218RSB	2	and/or	–	2		–	2		PHE IS1218X...	2	PHE IS1218CHN	1	PHE IS1218COVER	1
1220	PHE IS1220RSB	2	and/or	PHE IS1220FTB	2	and/or	PHE IS1220HTB	2	and/or	PHE IS1220X...	2	PHE IS1220CHN	1	PHE IS1220COVER	1
1222	PHE IS1222RSB	2	and/or	–	2		–	2		PHE IS1222X...	2	PHE IS1222CHN	1	PHE IS1222COVER	1
1618	PHE IS1618RSB	2	and/or	–	2		–	2		PHE IS1618X...	2	PHE IS1618CHN	1	PHE IS1618COVER	1
1620	PHE IS1620RSB	2	and/or	PHE IS1620FTB	2	and/or	PHE IS1620HTB	2	and/or	PHE IS1620X...	2	PHE IS1620CHN	1	PHE IS1620COVER	1
2018	PHE IS2018RSB	2	and/or	–	2		–	2		PHE IS2018X...	2	PHE IS2018CHN	1	PHE IS2018COVER	1
2020	PHE IS2020RSB	2	and/or	PHE IS2020FTB	2	and/or	PHE IS2020HTB	2	and/or	PHE IS2020X...	2	PHE IS2020CHN	1	PHE IS2020COVER	1
2418	PHE IS2418RSB	2	and/or	–	2		–	2		PHE IS2418X...	2	PHE IS2418CHN	1	PHE IS2418COVER	1
2422	PHE IS2422RSB	2	and/or	–	2		–	2		PHE IS2422X...	2	PHE IS2422CHN	1	PHE IS2422COVER	1

A complete chain coupling consists of: 2 hubs, 1 chain and 1 cover.
[1] Following chain coupling taper bush assembly configurations are possible: 2 hubs HTB or 2 hubs FTB or 1 hub HTB and 1 hub FTB.
[2] To complete bored to size designation, add bore size. For example: PHE IS1016X22MM designates hub size IS1016 with a 22 mm bore.

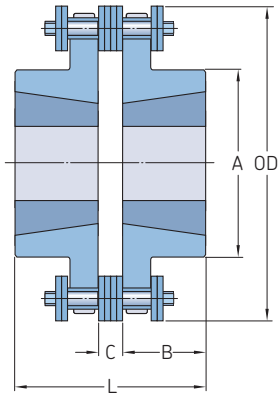

Assembly configuration HH

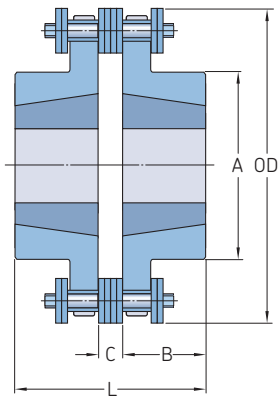

Assembly configuration FF

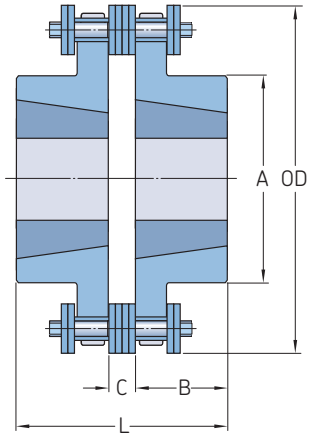

Assembly configuration FH

Coupling size	Bushing number	Bore		Dimensions					Mass	Speed	Nominal torque	Chain mass	Hub designation Plain bore	FTB	HTB	Bored to size
		Min.	Max.	A	B	C	L	OD		Max.						
–	–	mm							kg	r/min	Nm	kg	–			
0816	–	15,9	23,8	50,0	28,96	7,1	65,0	77,0	0,45	5 000	294	0,23	**PHE IS0816RSB**	–	–	PHE IS0816X...
	1108	12,7	28,6	50,0	22,20	7,1	51,6	77,0	0,41	5 000	294	0,23	**–**	PHE IS0816FTB	PHE IS0816HTB	–
1016	–	15,9	42,9	63,5	36,88	9,5	83,3	96,0	1,00	4 000	559	0,54	**PHE IS1016RSB**	–	–	PHE IS1016X...
1018	–	19,1	50,8	75,4	43,26	9,5	87,1	106,4	1,59	3 600	706	0,59	**PHE IS1018RSB**	–	–	PHE IS1018X...
	1610	12,7	41,3	75,4	25,40	9,5	60,3	106,4	0,50	3 600	706	0,59	**–**	PHE IS1018FTB	PHE IS1018HTB	–
1218	–	25,4	61,9	88,9	47,60	11,1	106,3	127,0	2,27	3 000	1 333	1,00	**PHE IS1218RSB**	–	–	PHE IS1218X...
1220	–	28,6	69,9	98,4	50,80	11,1	112,7	139,7	2,95	2 500	1 559	1,18	**PHE IS1220**	–	–	PHE IS1220X...
	2012	12,7	50,8	98,4	31,80	11,1	74,6	139,7	1,23	2 500	1 559	1,18	**–**	PHE IS1220FTB	PHE IS1220HTB	–
1222	–	28,6	76,2	114,3	54,00	11,1	119,1	151,2	4,31	2 500	1 794	1,23	**PHE IS1222RSB**	–	–	PHE IS1222X...
1618	–	28,6	79,4	115,9	60,70	14,7	136,1	169,1	4,99	2 000	2 961	2,40	**PHE IS1618RSB**	–	–	PHE IS1618X...
1620	–	38,1	90,5	136,5	66,10	14,7	146,9	185,3	7,40	2 000	3 579	2,68	**PHE IS1620RSB**	–	–	PHE IS1620X...
	3020	23,8	76,2	136,5	50,00	14,7	116,3	185,3	2,77	2 000	3 579	2,68	**–**	PHE IS1620FTB	PHE IS1620HTB	–
2018	–	38,1	98,4	144,5	70,90	18,3	160,1	211,5	9,21	1 800	4 981	4,45	**PHE IS2018RSB**	–	–	PHE IS2018X...
2020	–	38,1	117,5	170,7	79,80	18,3	177,9	231,8	14,43	1 800	6 688	4,95	**PHE IS2020RSB**	–	–	PHE IS2020X...
	3535	30,2	88,9	170,7	88,90	18,3	196,1	231,8	8,62	1 800	6 688	4,95	**–**	PHE IS2020FTB	PHE IS2020HTB	–
2418	–	50,8	119,1	171,5	88,30	21,8	198,4	254,0	16,70	1 500	10 032	7,85	**PHE IS2418RSB**	–	–	PHE IS2418X...
2422	–	50,8	155,6	222,3	102,10	21,8	226,0	302,0	31,76	1 200	12 993	9,62	**PHE IS2422RSB**	–	–	PHE IS2422X...

Taper bush rigid couplings provide a convenient method of rigidly connecting ends of shafts. Taper bushes permit easier and quicker fixing to the shafts with the firmness of a shrunk on fit. These couplings have a fully machined male and female flange. The male flange can have the bushing fitted from the hub side A (MH) or from the flange side B (H); the female flange (F) always has the bushing fitted from the flange side B. This gives two possible coupling assemblies: AB and BB. When connecting horizontal shafts, the most convenient assembly should be chosen. For connecting vertical shafts, use assembly BB only.

Order data

Coupling assembly	Male	Qty	Female	Qty
A/B	PHE R12MHTB	1	PHE R12FTB	1
	PHE R16MHTB	1	PHE R16FTB	1
	PHE R25MHTB	1	PHE R25FTB	1
	PHE R30MHTB	1	PHE R30FTB	1
	PHE R35MHTB	1	PHE R35FTB	1
	PHE R40MHTB	1	PHE R40FTB	1
	PHE R45MHTB	1	PHE R45FTB	1
	PHE R50MHTB	1	PHE R45FTB	1
B/B	PHE R12HTB	1	PHE R12FTB	1
	PHE R16HTB	1	PHE R16FTB	1
	PHE R25HTB	1	PHE R25FTB	1
	PHE R30HTB	1	PHE R30FTB	1
	PHE R35HTB	1	PHE R35FTB	1
	PHE R40HTB	1	PHE R40FTB	1
	PHE R45HTB	1	PHE R45FTB	1
	PHE R50HTB	1	PHE R50FTB	1

A complete coupling consists of one male and one female flange
Example: Coupling assembly AB PHE R12MHTB and PHE R12FTB
Coupling assembly BB PHE R12HTB and PHE R12FTB

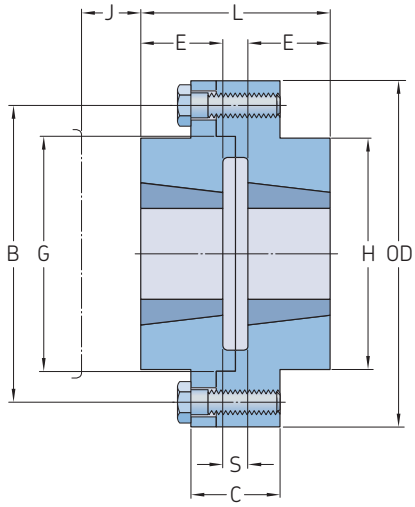

Assembly configuration AB

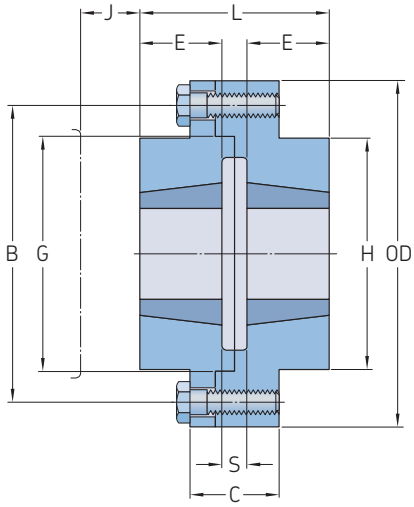

Assembly configuration BB

Coupling size	Bushing data Bushing number	Bushing data Bore Max.	Dimensions D	C	E	H	G Nominal	B Nominal	S[1]	J[2]	L	Mass[3]
–	–	mm	mm									kg
R12	1210	32	118	35	25	83	76	102	7	38	57	3,5
R16	1615	42	127	43	38	80	89	105	7	38	83	4,5
R25	2517	60	178	51	45	123	127	149	7	48	97	11,0
R30	3020	75	216	65	51	146	152	181	7	54	109	20,0
R35	3525	100	248	75	65	178	178	213	7	67	137	34,0
R40	4030	110	298	76	76	210	216	257	7	79	159	59,0
R45	4535	125	330	86	89	230	241	246	7	89	185	80,0
R50	5040	125	362	92	102	266	267	314	7	92	211	135,0

[1] J is the wrench clearance to allow for tightening and loosening the bushing on the shaft. The use of a shortened wrench will permit this dimension to be reduced
[2] S is the distance between shaft ends
[3] Mass given is for couplings with midrange taper bushings.

With a higher load capacity than jaw couplings and maintenance-free operation, FRC couplings are designed as a general purpose coupling. They are able to cushion moderate shock loads, dampen low levels of vibration and accommodate incidental misalignment. FRC couplings offer a range of hub and element selection to meet the demand for low cost, general purpose flexible coupling.

FRC couplings are phosphate coated for improved corrosion resistance and available with fire-resistant and anti-static elements (FRAS) FRC couplings are available with a pilot bore, finished bore or tapered bushing (face or hub) to make installation quick and simple.

Fully machined outside surfaces allow alignment with a simple straight edge. Shaft connections are fail safe due to their interlocking jaw design.

Assembled coupling characteristics

Size	Assembled length comprising flange types FF,FH,HH	FB,HB	BB	Mass	Inertia	Torsional stiffness	Misalignment Angular	Parallel	Axial	Nominal torque	Max torque
–	mm			kg	kg/m²	Nm/°	°	mm		Nm	
70	65,0	65,0	65,0	1,00	0,00085	–	1	0,3	0,2	31,5	72
90	69,5	76,0	82,5	1,17	0,00115	–	1	0,3	0,5	80,0	180
110	82,0	100,5	119,0	5,00	0,004	65	1	0,3	0,6	160,0	360
130	89,0	110,0	131,0	5,46	0,0078	130	1	0,4	0,8	315,0	720
150	107,0	129,5	152,0	7,11	0,0181	175	1	0,4	0,9	600,0	1 500
180	142,0	165,5	189,0	16,60	0,0434	229	1	0,4	1,1	950,0	2 350
230	164,5	202,0	239,5	26,00	0,1207	587	1	0,5	1,3	2 000,0	5 000
280	207,5	246,5	285,5	50,00	0,4465	1 025	1	0,5	1,7	3 150,0	7 200

Mass is for an FF, FH or HH coupling with mid range taper bushes.

Order data

Coupling type	Flanges	Qty	Element	Qty	Taper bush	Qty
RSB both sides	PHE FRC70RSB	2	PHE FRC70NR or	1	–	–
	–	–	PHE FRC70FR	–	–	–
RSB/F Combination	PHE FRC70RSB	1	PHE FRC70NR or	1	PHF TB1008X...MM	1
	PHE FRC70FTB	1	PHE FRC70FR	–	–	1
RSB/H Combination	PHE FRC70RSB	1	PHE FRC70NR or	1	PHF TB1008X...MM	1
	PHE FRC70HTB	1	PHE FRC70FR	–	–	1
F/F Combination	PHE FRC70FTB	1	PHE FRC70NR or	1	PHF TB1008X...MM	1
	PHE FRC70FTB	1	PHE FRC70FR	–	PHF TB1008X...MM	1
H/H Combination	PHE FRC70HTB	1	PHE FRC70NR or	1	PHF TB1008X...MM	1
	PHE FRC70HTB	1	PHE FRC70FR	–	PHF TB1008X...MM	1
F/H Combination	PHE FRC70FTB	1	PHE FRC70NR or	1	PHF TB1008X...MM	1
	PHE FRC70HTB	1	PHE FRC70FR	–	PHF TB1008X...MM	1

NR = Natural rubber
FR = Fire-resistant and anti-static (FRAS)
A complete FRC coupling consists of: 2 hubs and 1 element.

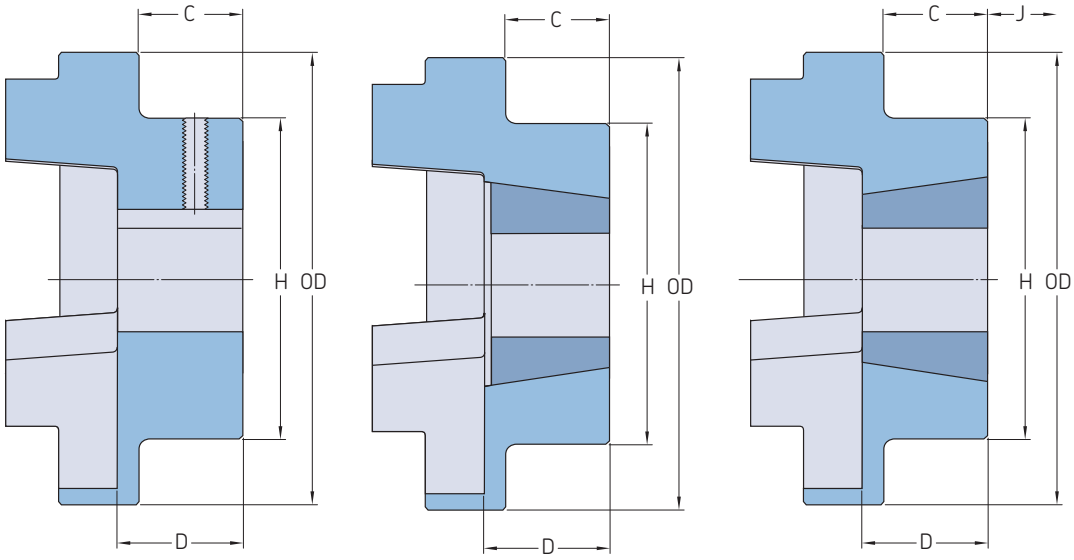

Coupling size	Dimensions		Bushing number Type F, H						Type B				
				Bore					Bore	Bore	Key screw		
	OD	H		Min.	Max.	C	D	J*	Max.	Pilot		C	D
–	mm												
70	69	60	1008	9	25	20,0	23,5	29	32	10	M6	20	25,8
90	85	70	1108	9	28	19,5	23,5	29	38	10	M6	26	30,0
110	112	100	1610	14	42	18,5	26,5	38	55	10	M10	37	45,3
130	130	105	1610	14	42	18,0	26,5	38	60	20	M10	39	47,5
150	150	115	2012	14	50	23,5	33,5	42	70	28	M10	46	60,0
180	180	125	2517	16	60	34,5	46,5	48	80	28	M10	58	70,0
230	225	155	3020	25	75	39,5	52,5	55	100	45	M12	77	90,0
280	275	206	3525	35	100	51,0	66,5	67	115	55	M16	90	105,5

* Clearance required for tightening/loosening the bushing on the shaft

Jaw couplings provide a cost-effective solution for standard power applications, helping to cushion moderate shock loads and dampen low vibration levels.

Maintenance-free and easy to install, jaw couplings are available with a snap wrap element allowing element replacement in situ.

Urethane and Hytrel® elements have a greater power rating than nitrile elements and are recommended for applications where a compact, high torque solution is required.

Standard bore and keyway chart

Bore	Keyway	Coupling Size 50	70	75	90	95	100	110	150	190	225
mm		–									
9	3 x 1,4	X	X	X	X	–	–	–	–	–	–
10	3 x 1,4	X	X	X	X	–	–	–	–	–	–
11	4 x 1,8	X	X	X	X	–	–	–	–	–	–
12	4 x 1,8	X	X	X	X	X	–	–	–	–	–
14	5 x 2,3	X	X	X	X	X	X	–	–	–	–
15	5 x 2,3	–	X	X	X	X	X	–	–	–	–
16	5 x 2,3	–	X	X	X	X	X	X	X	–	–
17	5 x 2,3	–	X	X	X	X	X	X	X	–	–
18	6 x 2,8	–	X	X	X	X	X	X	X	–	–
19	6 x 2,8	–	X	X	X	X	X	X	X	X	–
20	6 x 2,8	–	–	X	X	X	X	X	X	X	–
22	6 x 2,8	–	–	X	X	X	X	X	X	X	–
24	8 x 3,3	–	–	–	X	X	X	X	X	X	X
25	8 x 3,3	–	–	–	–	X	X	X	X	X	X
28	8 x 3,3	–	–	–	–	X	X	X	X	X	X
30	8 x 3,3	–	–	–	–	–	X	X	X	X	X
32	10 x 3,3	–	–	–	–	–	X	X	X	X	X
35	10 x 3,3	–	–	–	–	–	X	X	X	X	X
38	10 x 3,3	–	–	–	–	–	X	X	X	X	X
40	12 x 3,3	–	–	–	–	–	–	X	X	X	X
42	12 x 3,3	–	–	–	–	–	–	X	X	X	X
45	14 x 3,8	–	–	–	–	–	–	–	X	X	X
48	14 x 3,8	–	–	–	–	–	–	–	X	X	X
50	14 x 3,8	–	–	–	–	–	–	–	–	X	X
55	16 x 4,3	–	–	–	–	–	–	–	–	X	X
60	18 x 4,4	–	–	–	–	–	–	–	–	–	X

Order data

Coupling type	Flanges	Qty	Element	Qty	Spacer shaft	Qty	Nitrile wrap element	Qty	Ring kit	Qty
RSB both sides	PHE L095HUB	2	PHE L095NR or	1	PHE L090X ... SPACER	1	PHE L090NRWRAP	2	PHE L090RINGKIT	2
	–	–	PHE L095UR	–	–	–	–	–	–	–
	–	–	PHE L095HL	–	–	–	–	–	–	–
Bore with keyway/RSB combination	PHE L095HUB	1	PHE L095NR or	1	PHE L090X ... SPACER	1	PHE L090NRWRAP	2	PHE L090RINGKIT	2
	PHE L095 – ... MM	1	PHE L095UR	–	–	–	–	–	–	–
	–	–	PHE L095HL	–	–	–	–	–	–	–
Bore with keyway on both sides	PHE L095 – ... MM	2	PHE L095NR or	1	PHE L090X ... SPACER	1	PHE L090NRWRAP	2	PHE L090RINGKIT	2
	–	–	PHE L095UR	–	–	–	–	–	–	–
	–	–	PHE L095HL	–	–	–	–	–	–	–
Bore only/RSB combination	PHE L095 – ... MMP	1	PHE L095NR or	1	PHE L090X ... SPACER	1	PHE L090NRWRAP	2	PHE L090RINGKIT	2
	PHE L095HUB	1	PHE L095UR	–	–	–	–	–	–	–
	–	–	PHE L095HL	–	–	–	–	–	–	–
Bore only	PHE L095 – ... MMP	2	PHE L095NR or	1	PHE L090X ... SPACER	1	PHE L090NRWRAP	2	PHE L090RINGKIT	2
	–	–	PHE L095UR	–	–	–	–	–	–	–
	–	–	PHE L095HL	–	–	–	–	–	–	–
Bore only/bore with keyway combination	PHE L095 – ... MMP	1	PHE L095NR or	1	PHE L090X ... SPACER	1	PHE L090NRWRAP	2	PHE L090RINGKIT	2
	PHE L095 – ... MM	1	PHE L095UR	–	–	–	–	–	–	–
	–	–	PHE L095HL	–	–	–	–	–	–	–

NR = Nitrile
UR = Urethane
HL = Hytrel®
A complete jaw coupling consists of: 2 hubs and 1 element and a complete coupling with spacer consists of 2 hubs, 2 nitrile elements, 2 ring kits and 1 spacer.
Available spacer shaft lengths are 100 mm and 140 mm. To complete the designation, add spacer length. For example: PHE L090X100SPACER for spacer of 100 mm, coupling size 090.
When ordering bored to size and keywayed hubs, it is required that the bore diameter is added to the designation found in the table above.
Where a keyway is NOT required, the designation should be suffixed with a P.
PHE L150-18MM = Hub Size 150 with 18 mm bore and keyway.
PHE L070-16MMP = Hub Size 070 with 16 mm bore (no keyway).

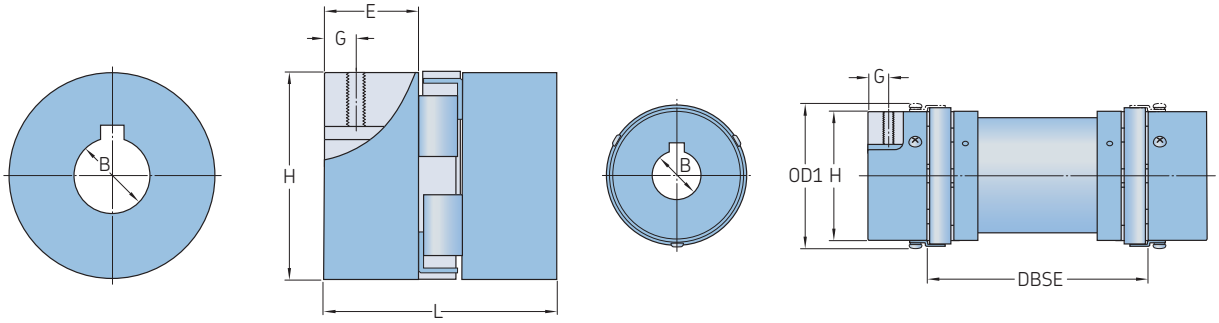

Hub

Spacer

Size	Dimensions Bore Pilot		OD	OD1[1]	L	E	H	G	Set screw	Approx mass[2]	Speed	Designation
		Max.									Max.	
–	mm								–	kg	r/min	–
35	3,20	9,5	15,9	–	20,6	6,7	15,9	–	–	0,03	31 000	**PHE L035HUB**
50	6,35	14,0	27,5	–	44,0	16,0	27,5	6,5	M6	0,05	18 000	**PHE L050HUB**
70	6,35	19,0	35,0	–	51,0	19,0	35,0	9,5	M6	0,13	14 000	**PHE L070HUB**
75	6,35	24,0	44,5	–	54,0	21,0	44,5	9,0	M6	0,22	11 000	**PHE L075HUB**
90	6,35	24,0	54,0	–	54,0	21,0	54,0	8,7	M6	0,28	9 000	**PHE L090HUB**
95	11,11	28,0	54,0	64	64,0	25,0	54,0	11,0	M8	0,28	9 000	**PHE L095HUB**
100	12,70	35,0	65,0	77	89,0	35,0	65,0	11,0	M8	0,75	7 000	**PHE L100HUB**
110	15,87	42,0	84,0	97	108,0	43,0	84,0	19,0	M10	1,50	5 000	**PHE L110HUB**
150	15,87	48,0	96,0	112	115,0	45,0	96,0	22,0	M10	2,40	4 000	**PHE L150HUB**
190	19,05	55,0	115,0	130	133,0	54,0	102,0	22,0	M12	3,50	3 600	**PHE L190HUB**
225	19,05	60,0	127,0	143	153,0	64,0	108,0	29,0	M12	4,50	3 600	**PHE L225HUB**

[1] Outer diameter of ring kit
[2] Mass of hub with pilot bores
DBSE = Distance between shaft ends
Hub material is high grade cast iron. Spacer material is aluminium.

Universal joints

SKF universal joints, also known as pin and block couplings, are commonly used for low to medium torque industrial, off-road and agricultural applications.

These couplings offer an economical solution for applications up to 1 800 r/min and will provide working angles of up to 25% or 35% for manual drives. SKF offers these couplings with a solid bore from stock; bored to size, square, hexagonal and round bores on request. The couplings are available in either a single (UJMA) or double (UJMB) configuration.

Order data

Universal joint type	Size	Qty
Single	PHE UJMA10	1
Double	PHE UJMB20	1

Available on request with finish bore, finish bore with keyway, hexagonal bore or square bore, e.g. the designations as shown below:

Universal joints with finish bore H7, with keyway (BSX30MM) – PHE UJMB45BSX30MM
Universal joints with finish bore H7, without keyway (X30MM) – PHE UJMB45X30MM
Universal joints with hexagonal bore (HBX30MM) – PHE UJMB45HBX30MM
Universal joints with square bore (SBX30MM) – PHE UJMB45SBX30MM

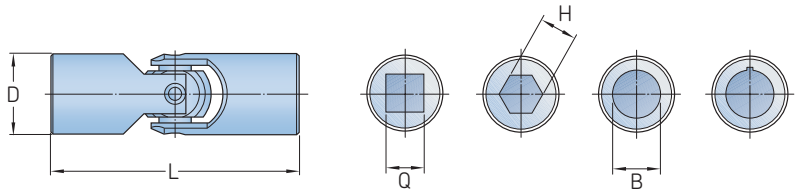

Size	Dimensions							Static breaking torque	Designation
			Bore						
	L	D	B	Q	H	B Max.	B with keyway Max.		
–	mm							Nm	–
10	38	10	6	6	6	6	–	13,5	**PHE UJMA10**
13	45	13	8	8	8	8	–	26,0	**PHE UJMA13**
16	52	16	8	8	8	10	8	45,0	**PHE UJMA16**
20	62	20	10	10	10	13	11	88,0	**PHE UJMA20**
25	74	25	12	12	12	16	14	180,0	**PHE UJMA25**
32	86	32	16	16	16	22	18	405,0	**PHE UJMA32**
40	108	40	20	20	20	25	22	860,0	**PHE UJMA40**
45	120	45	20	20	20	30	25	1 250,0	**PHE UJMA45**
50	132	50	25	25	25	35	30	1 730,0	**PHE UJMA50**
63	166	63	32	32	–	45	35	3 400,0	**PHE UJMA63**
75	190	75	40	40	–	55	45	5 300,0	**PHE UJMA75**

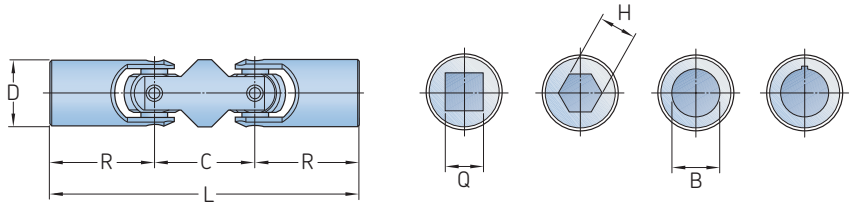

Size	Dimensions									Static breaking torque	Designation
					Bore						
	L	R	D	C	B	B Max.	B with keyway Max.	Q	H		
–	mm									Nm	–
13	68	22,5	13	23	8	8	–	8	8	26	**PHE UJMB13**
16	77	26,0	16	25	8	10	8	8	8	45	**PHE UJMB16**
20	92	31,0	20	30	10	13	11	10	10	88	**PHE UJMB20**
25	110	37,0	25	36	12	16	14	12	12	180	**PHE UJMB25**
32	133	43,0	32	47	16	22	18	16	16	405	**PHE UJMB32**
40	164	54,0	40	56	20	25	22	20	20	860	**PHE UJMB40**
45	183	60,0	45	63	20	30	25	20	20	1 250	**PHE UJMB45**
50	202	66,0	50	70	25	35	30	25	25	1 730	**PHE UJMB50**
63	250	83,0	63	84	32	45	35	32	–	3 400	**PHE UJMB63**
75	290	95,0	75	100	40	55	45	40	–	5 300	**PHE UJMB75**

Page intentionally left blank

SKF

Bushings and Hubs

Taper bushings 138

Weld-on hubs. 140

Bolt-on hubs / Adapters. 141

QD Bushings. 142

QD Weld-on hubs. 144

FX keyless bushings 146

SKF Bushings

SKF bushing range nomenclature has a defined prefix of PHF. The bushing range is covered by limited standards, but main SKF range is interchangeable with other brands.

Bushings

The bushing range designation from SKF has the following is an example to indicate set up.

SKF Designation prefix — **PHF TB2517 X55MM**

Bushing size and type
Example:
TB2517 – taper bushing size 2517
M – QD series M
FX10 – FX friction bush series 10

Supplementary
Bore sizes and dimensions
QD & taper bushing
X55MM – 55mm bore diameter standard keyway
-2-3/4 – inch shaft 2-3/4 with standard keyway
50X80 – FX bushing bore and OD dimensions

Note
See SKF product training for full supplementary notations

Bushings and Hubs (PHF Product Group)

SKF Taper bushings, QD bushings, Weld-on and Bolt-on hubs are manufactured according to established market standards and are fully interchangeable with other brands.

Metric bore keyway machined according to BS 4235: Part 1 and DIN 6885.

Imperial bore keyway machined according to BS 46: Part 1.

Phosphate coating and blackening are used to improved corrosion resistance, excluding FX bushings.

Main materials used in bushings and hubs

Taper bushing	Grey cast iron HT250
QD bushing	Grey cast iron HT250
Weld on and Bolt on hubs	Grey cast iron HT250
FX Bushings	C45 Steel

Taper bushings

Bushing number 1008 – 120100

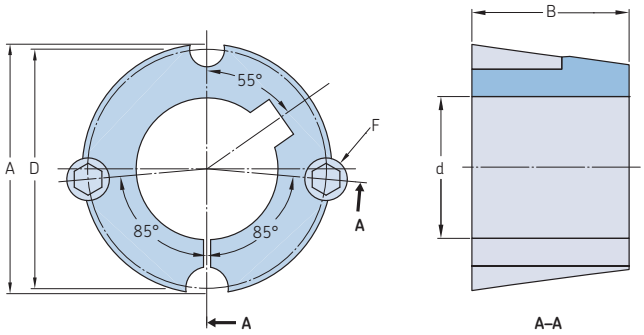

1008 - 3030[3)]

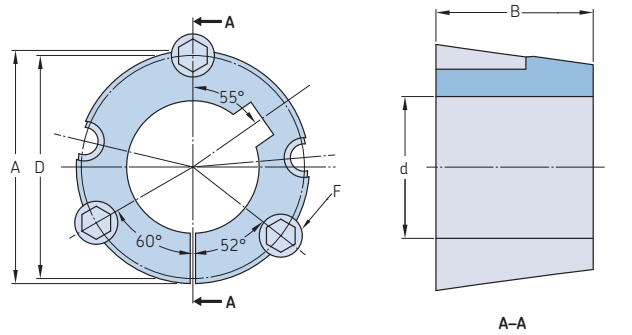

3525 - 5050

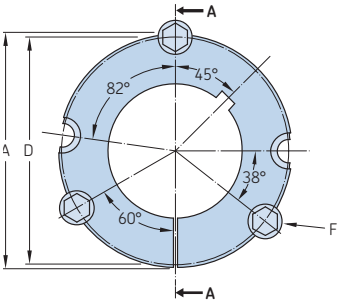

6050

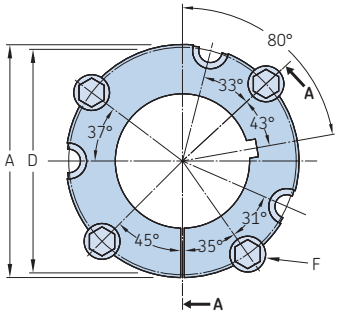

7060 to 10085a

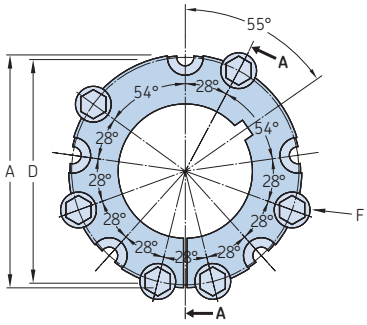

120100

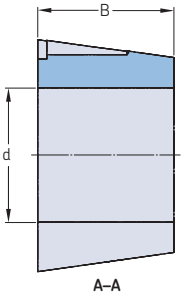

Bushing number	Bore d Min.		Max.		Dimensions A	B	D	E	F[2)]	Mass	Designation
–	mm	in.	mm	in.	mm					kg	–
1008	9	3/8	25	1	35,2	22,2	33,7	–	6,350 x 12,700	0,05	**PHF TB1008X...**
1108	9	3/8	28	1 1/8	38,4	22,2	36,9	–	6,350 x 12,700	0,08	**PHF TB1108X...**
1210	11	1/2	32	1 1/4	47,6	25,4	44,5	–	9,525 x 15,875	0,19	**PHF TB1210X...**
1215	11	1/2	32	1 1/4	47,6	38,1	44,5	–	9,525 x 15,875	0,27	**PHF TB1215X...**
1610	14	1/2	42	1 5/8	57,2	25,4	54,0	–	9,525 x 15,875	0,31	**PHF TB1610X...**
1615	14	1/2	42	1 5/8	57,2	38,1	54,0	–	9,525 x 15,875	0,46	**PHF TB1615X...**
2012	14	1/2	50	2	69,9	31,8	66,7	–	11,113 x 22,225	0,65	**PHF TB2012X...**
2017	14	1/2	50	2	69,9	44,5	66,7	–	11,113 x 22,225	0,91	**PHF TB2017X...**
2517[1)]	16	1/2	60	2 1/2	85,7	44,5	82,6	–	12,700 x 25,400	1,47	**PHF TB2517X...**
2525	16	1/2	60	2 1/2	85,7	63,5	82,6	–	12,700 x 25,400	4,30	**PHF TB2525X...**
3020	25	1	75	3	108,0	50,8	101,6	–	15,875 x 31,750	2,25	**PHF TB3020X...**
3030	35	1	75	3	108,0	76,2	101,6	–	15,875 x 31,750	3,25	**PHF TB3030X...**
3525[1)]	35	1 1/4	100*	4	127,0	63,5	123,0	–	12,700 x 38,100	4,23	**PHF TB3525X...**
3535[1)]	35	1 1/4	90	3 1/2	127,0	89,0	123,0	–	12,700 x 38,100	5,78	**PHF TB3535X...**
4030	40	1 3/4	115*	4 1/4	146,0	76,2	141,0	–	15,875 x 44,450	7,00	**PHF TB4030X...**
4040	40	1 3/4	100	4	146,0	102,0	141,0	–	15,875 x 44,450	9,20	**PHF TB4040X...**
4535	55	2	125	5	161,0	89,0	156,0	–	19,050 x 50,800	9,10	**PHF TB4535X...**
4545	55	2	115*	4 1/2	161,0	114,0	156,0	–	19,050 x 50,800	11,80	**PHF TB4545X...**
5040	70	2 5/8	140	5 1/2	178,0	101,6	171,0	–	22,255 x 57,150	12,26	**PHF TB5040X...**
5050	70	2 5/8	125	5	178,0	127,0	171,0	–	22,255 x 57,150	15,18	**PHF TB5050X...**
6050	95	3 7/8	150	6	235,0	127,0	228,6	171,5	31,800 x 88,900	25,00	**PHF TB6050X...**
7060	110	4 5/8	170	7	260,4	152,4	254,0	196,9	31,800 x 88,900	34,00	**PHF TB7060X...**
8065	130	5 1/16	190	8	285,8	165,1	279,4	222,3	31,800 x 88,900	45,00	**PHF TB8065X...**
10085	170	6 9/16	260	10	374,7	215,9	368,3	298,5	38,100 x 114,300	104,00	**PHF TB10085X...**
120100	200	7 9/16	290	12	438,2	254,0	431,8	362,0	38,100 x 114,300	163,00	**PHF TB120100X...**

Note: Bushings cannot be bored out larger than listed.
Bushings are supplied with screws: 1008 - 3030 (2 screws); 3525 - 6050 (3 screws); 7060 - 10085 (4 screws); and 120100 (6 screws).
[1)] Bushings are also available with coarse thread (UNC) according to ASME/ANSI standard. To complete designation, add U before bushing number and bore size at the end of designation, e.g. PHF TBU3525X70MM.
[2)] Screw size x length.
A is the diameter at the face of the bush and D is the bolt pitch diameter.
To complete designation, add bore size. For example: PHF TB1215X16MM designates a 1215 taper bushing with a 16 mm bore.
*Indicates shallow key required (e.g. DIN 6885/3).
[3)] Sizes 1008 - 3030 may be supplied in either 3 hole or 4 hole. There is no difference in their respective performance characteristics.

Metric bores and keyway

Bore diameter	Keyway Width	Depth	Shallow keyway depth	Bore sizes available															
mm				1008	1108	1210	1610	1615	2012	2517	3020	3030	3525	3535	4030	4040	4535	4545	5040	5050
9	3	1,4	–	•	•															
10	3	1,4	–	•	•															
11	4	1,8	–	•	•	•														
12	4	1,8	–	•	•	•														
14	5	2,3	–	•	•	•	•	•	•											
15	5	2,3	–	•	•	•	•	•	•											
16	5	2,3	–	•	•	•	•	•	•	•										
18	6	2,8	–	•	•	•	•	•	•	•										
19	6	2,8	–	•	•	•	•	•	•	•										
20	6	2,8	–	•	•	•	•	•	•	•										
22	6	2,8	–	•	•	•	•	•	•	•										
24	8	3,3	1,3	• *	•	•	•	•	•	•										
25	8	3,3	1,3	• *	•	•	•	•	•	•	•									
28	8	3,3	1,3		• *	•	•	•	•	•	•									
30	8	3,3	–			•	•	•	•	•	•									
32	10	3,3	–			•	•	•	•	•	•									
35	10	3,3	–				•	•	•	•	•	•	•	•						
38	10	3,3	–				•	•	•	•	•	•	•	•						
40	12	3,3	1,3				•	• *	•	•	•	•	•	•	•	•				
42	12	3,3	1,3				•	• *	•	•	•	•	•	•	•	•				
45	14	3,8	–						•	•	•	•	•	•	•	•				
48	14	3,8	–						•	•	•	•	•	•	•	•				
50	14	3,8	–						•	•	•	•	•	•	•	•				
55	16	4,3	–							•	•	•	•	•	•	•	•	•		
60	18	4,4	–							•	•	•	•	•	•	•	•	•		
65	18	4,4	–								•	•	•	•	•	•	•	•		
70	20	4,9	–								•	•	•	•	•	•	•	•	•	•
75	20	4,9	–								•	•	•	•	•	•	•	•	•	•
80	22	5,4	–										•	•	•	•	•	•	•	•
85	22	5,4	–										•	•	•	•	•	•	•	•
90	25	5,4	–										•	•	•	•	•	•	•	•
95	25	5,4	–										•		•	•	•	•	•	•
100	28	6,4	4,4										• *		•		•	•	•	•
105	28	6,4	–												•		•	•	•	•
110	28	6,4	–												•		•	•	•	•
110	32	7,4	5,4												• *		•	• *	•	•
120	32	7,4	–														•		•	•
125	32	7,4	–														•		•	•
130	32	7,4	–																•	
140	32	8,4	6,4																• *	

Inch bores and keyway

Bore diameter	Keyway Width	Depth	Shallow keyway depth	Bore sizes available															
in.				1008	1108	1210	1610	1615	2012	2517	3020	3030	3525	3535	4030	4040	4535	4545	5040	5050
3/8	1/8	1/16	–	•	•															
1/2	1/8	1/16	–	•	•		•	•	•	•										
5/8	3/32	3/32	–	•	•	•	•	•	•	•										
3/4	3/32	3/32	–	•	•	•	•	•	•	•										
7/8	1/4	1/8	–	•	•	•	•	•	•	•										
1	1/4	1/8	1/16	• *	•	•	•	•	•	•	•	•								
1 1/8	5/16	1/8	5/64		• *	•	•	•	•	•	•	•								
1 1/4	5/16	1/8	–			•	•	•	•	•	•	•		•						
1 3/8	3/8	1/8	–				•	•	•	•	•	•		•						
1 1/2	3/8	1/8	–				•	•	•	•	•	•	•	•						
1 5/8	7/16	5/32	1/8				•	• *	•	•	•	•	•	•						
1 3/4	7/16	5/32	–						•	•	•	•	•	•	•	•				
1 7/8	1/2	5/32	–						•	•	•	•	•	•	•	•				
2	1/2	5/32	–						•	•	•	•	•	•	•	•	•	•		
2 1/8	5/8	7/32	–							•	•	•	•	•	•	•	•	•		
2 1/4	5/8	7/32	–							•	•	•	•	•	•	•	•	•		
2 3/8	5/8	7/32	–							•	•	•	•	•	•	•	•	•		
2 1/2	5/8	7/32	–							•	•	•	•	•	•	•	•	•		
2 5/8	3/4	1/4	–								•	•	•	•	•	•	•	•	•	•
2 3/4	3/4	1/4	–								•	•	•	•	•	•	•	•	•	•
2 7/8	3/4	1/4	–								•	•	•	•	•	•	•	•	•	•
3	3/4	1/4	–								•	•	•	•	•	•	•	•	•	•
3 1/8	7/8	5/16	–										•	•	•	•	•	•	•	•
3 1/4	7/8	5/16	–										•	•	•	•	•	•	•	•
3 3/8	7/8	5/16	–										•	•	•	•	•	•	•	•
3 1/2	7/8	5/16	–										•	•	•	•	•	•	•	•
3 3/4	1	3/8	5/16										• *		•	•	•	•	•	•
4	1	3/8	7/32										• *		•	•	•	•	•	•
4 1/4	1 1/4	7/16	–												•		•	•	•	•
4 1/2	1 1/4	7/16	11/32												• *		•	•	•	•
4 3/4	1 1/4	7/16	–														•		•	•
5	1 1/4	7/16	11/32														• *		•	•

* Bushing comes with a shallow keyway.

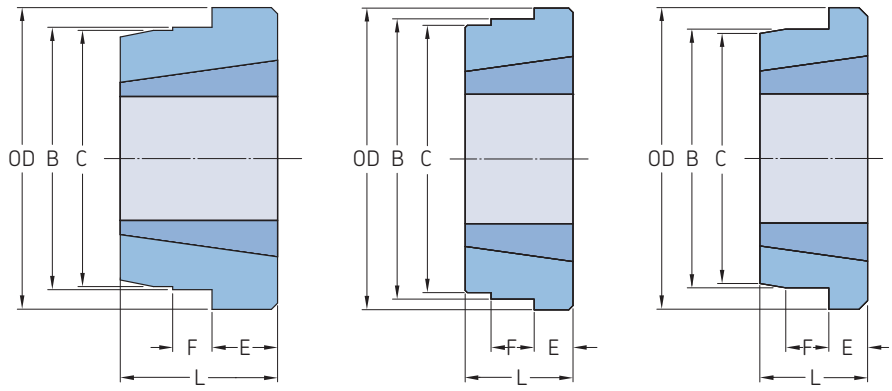

Type W | Type WH | Type WM

Type	Bushing number	Dimensions						Designation
		OD	B	C	L	E	F	
–	–	mm						–
W	1215	73,03	63,50	62,71	38,1	15,88	9,53	**PHH W12**
	1615	82,55	73,03	72,24	38,1	15,88	9,53	**PHH W16**
	2017	101,60	88,90	88,11	44,4	19,05	11,91	**PHH W20**
	2517	127,00	111,13	110,34	44,4	19,05	12,70	**PHH W25**
	3030	149,86	133,35	132,56	76,2	25,40	19,05	**PHH W30**
	3535	184,15	158,75	157,96	88,9	31,75	25,40	**PHH W35**
	4040	225,43	196,85	196,06	101,6	31,75	31,75	**PHH W40**
	4545	254,00	222,25	221,46	114,3	38,10	38,10	**PHH W45**
WH	1210	70,00	65,00	64,50	25,0	9,00	10,00	**PHH WH12**
	1610	80,00	75,00	74,50	25,0	9,00	10,00	**PHH WH16**
	2012	95,00	90,00	89,50	32,0	12,00	12,00	**PHH WH20**
	2517	115,00	110,00	109,50	44,0	19,00	15,00	**PHH WH25**
	3020	145,00	140,00	139,50	50,0	20,00	15,00	**PHH WH30**
	3535	190,00	180,00	179,50	89,0	25,00	25,00	**PHH WH35-2**
	4030	200,00	190,00	189,50	76,0	32,00	30,00	**PHH WH40-1**
	4040	200,00	190,00	189,50	101,0	32,00	30,00	**PHH WH40-2**
	4535	210,00	200,00	199,50	89,0	40,00	30,00	**PHH WH45-1**
	4545	210,00	200,00	199,50	114,0	40,00	30,00	**PHH WH45-2**
	5040	230,00	220,00	219,50	102,0	40,00	35,00	**PHH WH50-1**
	5050	230,00	220,00	219,50	127,0	40,00	35,00	**PHH WH50-2**
WM	1210	70,00	60,00	58,00	25,0	9,00	10,00	**PHH WM12**
	1610	83,00	70,00	68,00	25,0	9,00	10,00	**PHH WM16-1**
	1615	83,00	70,00	68,00	38,0	16,00	11,00	**PHH WM16-2**
	2012	95,00	90,00	88,00	32,0	12,00	12,00	**PHH WM20**
	2517	127,00	110,00	108,00	44,0	19,00	13,00	**PHH WM25**
	3020	152,00	130,00	125,00	50,0	20,00	15,00	**PHH WM30-1**
	3030	152,00	130,00	125,00	76,0	25,00	19,00	**PHH WM30-2**
	3535	184,00	155,00	151,00	89,0	32,00	25,00	**PHH WM35**
	4040	225,00	195,00	187,00	102,0	32,00	32,00	**PHH WM40**
	4545	254,00	220,00	213,00	114,0	38,00	38,00	**PHH WM45**
	5050	276,00	242,00	228,00	127,0	38,00	38,00	**PHH WM50**

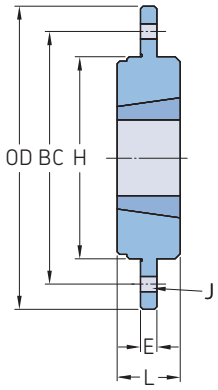

Type BF

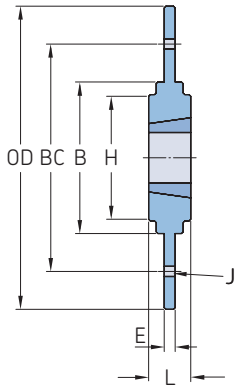

Type SM

Type	Bushing number	Dimensions							Designation
		OD	B	BC	L	E	H	J*	
–	–	mm							–
BF	1210	120	–	100	25	6,5	80	6 x 6,6	**PHH BF12**
	1610	130	–	110	25	6,5	90	6 x 6,6	**PHH BF16**
	2012	145	–	125	32	8,5	100	6 x 9,0	**PHH BF20**
	2517	185	–	155	44	11,5	130	6 x 11,0	**PHH BF25**
	3020	220	–	190	50	11,5	165	6 x 13,0	**PHH BF30**
SM	1210	180	75	135	25	6,5	90	6 x 7,5	**PHH SM12**
	1615	200	85	150	38	7,5	110	6 x 7,5	**PHH SM16**
	2012	270	110	190	32	8,5	140	6 x 9,5	**PHH SM20**
	2517	340	125	240	45	9,5	170	8 x 11,5	**PHH SM25**
	3020	430	160	300	51	13,5	220	8 x 13,5	**PHH SM30-1**
	3020	485	160	340	51	13,5	250	8 x 13,5	**PHH SM30-2**

* Number of screw holes x hole diameter.

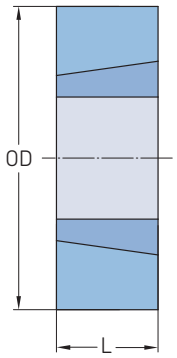

Taper bushed adapters (obsolete)

Type	Bushing number	Dimensions		Keyway Width	Depth	Designation
		OD	L			
–	–	mm				–
1008KM	1008	45	22	5	2,5	PHH TBA1008KM
1008PM	1008	45	22	–	–	PHH TBA1008PM
1210KM	1210	60	25	6	3,0	PHH TBA1210KM
1210PM	1210	60	25	–	–	PHH TBA1210PM
1215KM	1215	60	38	6	3,0	PHH TBA1215KM
1215PM	1215	60	38	–	–	PHH TBA1215PM
1610KM	1610	70	25	10	4,0	PHH TBA1610KM
1610PM	1610	70	25	–	–	PHH TBA1610PM
1615KM	1615	70	38	10	4,0	PHH TBA1615KM
1615PM	1615	70	38	–	–	PHH TBA1615PM
2517KM	2517	105	45	16	4,0	PHH TBA2517KM
2517PM	2517	105	45	–	–	PHH TBA2517PM
3030KM	3030	130	76	20	5,0	PHH TBA3030KM
3030PM	3030	130	76	–	–	PHH TBA3030PM
3535KM	3535	160	89	22	5,0	PHH TBA3535KM
3535PM	3535	160	89	–	–	PHH TBA3535PM
4040KM	4040	185	102	24	5,0	PHH TBA4040KM
4040PM	4040	185	102	–	–	PHH TBA4040PM

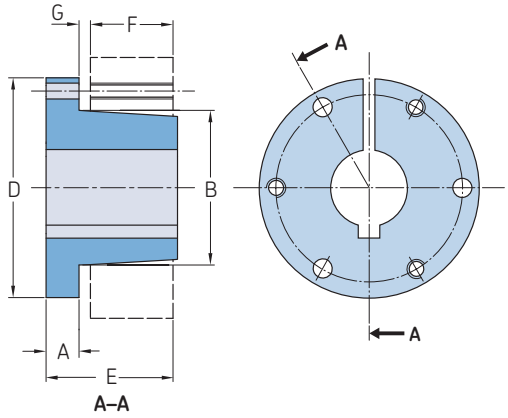

Size JA-J

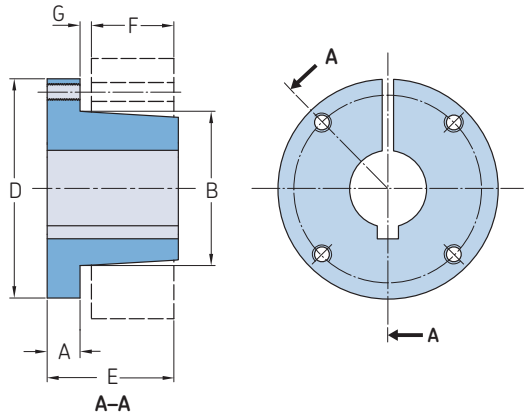

Size M-S

Bushing number	Bore range Min.	Standard keyway Max.	Shallow keyway	Dimensions A	B	D	E	F	G	Set screw size	Average mass		Designation
–	mm										kg	lbs.	–
JA	9,53	25,40	31,75	7,90	35,10	50,80	25,40	14,22	3,05	10 - 24	0,40	0,9	**PHF JA...**
SH	12,70	34,92	42,86	10,90	47,80	66,80	33,27	20,57	3,05	6,35	0,50	1,0	**PHF SH...**
SDS	12,70	42,86	50,80	10,90	55,40	80,80	33,27	19,05	3,05	6,35	0,72	1,0	**PHF SDS...**
SD	12,70	42,86	49,21	10,90	55,40	80,80	45,97	31,75	3,05	6,35	0,93	1,5	**PHF SD...**
SK	12,70	53,97	63,50	14,20	71,40	98,60	49,02	31,75	5,58	33,34	0,90	2,0	**PHF SK...**
SF	12,70	74,61	71,43	16,00	79,50	117,60	52,32	31,75	5,58	33,34	2,23	3,0	**PHF SF...**
E	22,26	73,02	88,90	22,40	97,30	152,40	69,85	41,02	6,35	9,50	4,62	10,0	**PHF E...**
F	25,40	100,01	100,01	25,40	112,50	168,40	95,25	63,50	8,64	12,70	5,20	11,5	**PHF F...**
J	36,51	95,25	114,30	28,70	130,60	184,20	122,68	80,77	9,65	41,27	8,20	18,0	**PHF J...**
M	74,61	120,65	139,70	31,80	165,10	228,60	171,45	131,57	10,41	19,10	27,00	37,0	**PHF M...**
N	61,91	130,18	152,40	38,10	177,80	254,00	206,25	158,75	14,22	19,10	37,50	57,0	**PHF N...**
P	74,61	150,81	177,80	44,50	209,60	298,50	238,25	184,15	16,02	22,20	54,40	120,0	**PHF P...**
W	101,60	190,50	215,90	50,80	264,70	381,00	289,05	228,60	12,70	25,40	113,40	250,0	**PHF W...**
S	152,40	209,55	254,00	69,90	308,10	450,90	387,35	304,80	19,05	31,75	181,40	400,0	**PHF S...**

To complete the designation, add bore size in inch or millimetres (standard bore sizes available on next page).
E.g.: PHF SDS-1-11/16 and PHF SDS-25MM.

Inch bores and keyway

Bushing number	Bore	Keyway
–	in.	
JA	3/8 – 7/8	No keyway
	1/2	STD
	1 1/18 – 1 1/8	1/4 x 1/16
	1 3/16	1/4 x 1/16
	1 1/4	No keyway
SH	1/2 – 1 3/8	STD
	1 7/16 – 1 1/2	3/8 x 1/16
	1 9/16 – 1 5/8	3/8 x 1/16
	1 11/16	No keyway
SDS	1/2 – 1 11/16	STD
	1 3/4	3/8 x 1/8
	1 13/16	1/2 x 1/8
	1 7/8 – 1 15/16	1/2 x 1/16
	2	No keyway
SD	1/2 – 1 11/16	STD
	1 3/4	3/8 x 1/8
	1 13/16	1/2 x 1/8
	1 7/8	1/2 x 1/16
	1 15/16	1/2 x 1/16
	2	No keyway
SK	1/2 – 2 1/8	STD
	2 3/16 – 2 1/4	1/2 x 1/8
	2 5/16 – 2 1/2	1 5/8 x 1/16
	2 9/16 – 2 5/8	No keyway
SF	1/2 – 2 1/4	STD
	2 5/16 – 2 1/2	1 5/8 x 3/16
	2 9/16 – 2 3/4	5/8 x 1/16
	2 13/16 – 2 7/8	3/4 x 1/16
	2 15/16	3/4 x 1/32
E	7/8 – 2 7/8	STD*
	2 15/16 – 3 1/4	3/4 x 1/8
	3 3/8 – 3 1/2	7/8 x 1/16
F	1 – 3 15/16	STD*
	3 3/8 – 3 3/4	7/8 x 3/16
	3 7/8 – 3 15/16	1 x 1/8
	4	No keyway
J	1 1/4 – 3 3/4	STD*
	3 13/16 – 4 1/2	1 x 1/8
M	2 – 4 3/4	STD*
	4 13/16 – 5 1/2	1 1/4 x 1/4
N	2 7/16	STD*
	5 7/8 – 5 1/2	1 1/4 x 1/4
	5 9/16	1 1/2 x 1/4
P	2 15/16 – 5 15/16	STD*
	6 – 6 1/2	1 1/2 x 1/4
	6 9/16	1 3/4 x 1/8
W	4 – 7 1/2	STD*
	7 9/16 – 8 1/2	2 x 1/4

* Please contact SKF for details.

Metric bores and keyway

Bushing number	Bore	Keyway - WxT
–	mm	
SH	24, 25	8 x 7
	28, 30	–
	32, 35	10 x 8
SDS	24, 25	8 x 7
	28, 30	–
	32, 35	10 x 8
	38	–
	40, 42	12 x 8
SD	24, 25	8 x 7
	28, 30	–
	32, 35	10 x 8
	38	–
	40, 42	12 x 8
SK	24, 25	8 x 7
	28, 30	–
	32, 35	10 x 8
	38	–
	40, 42	12 x 8
	48, 50	14 x 9
	55	16 x 10
SF	28, 30	8 x 7
	32, 35	10 x 8
	38	–
	40, 42	12 x 8
	48, 50	14 x 9
	55	16 x 10
	60	18 x 11
E	35, 38	10 x 8
	40, 42	12 x 8
	48, 50	14 x 9
	55	16 x 10
	60, 65	18 x 11
	70, 75	20 x 12
F	48, 50	14 x 9
	55	16 x 10
	60, 65	18 x 11
	70, 75	20 x 12
	80, 85	22 x 14
	90	25 x 14
J	50	14 x 9
	55	16 x 10
	60, 65	18 x 11
	70, 75	20 x 12
	80, 85	22 x 14
	90, 95	25 x 14
	100	28 x 16

The metric system does not refer to keyseat or keyway dimensions as the inch system. Instead, dimensions are given for the key itself which is rectangular in shape, not square as in the inch system.

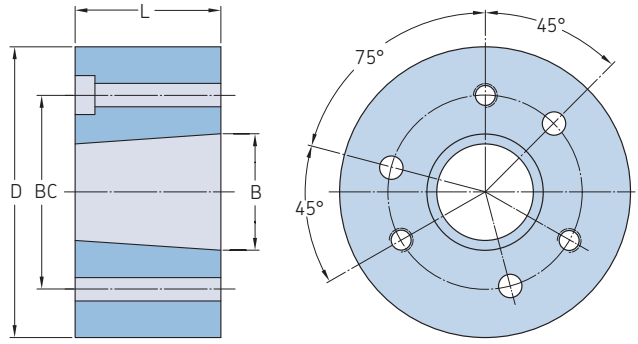

Type 1

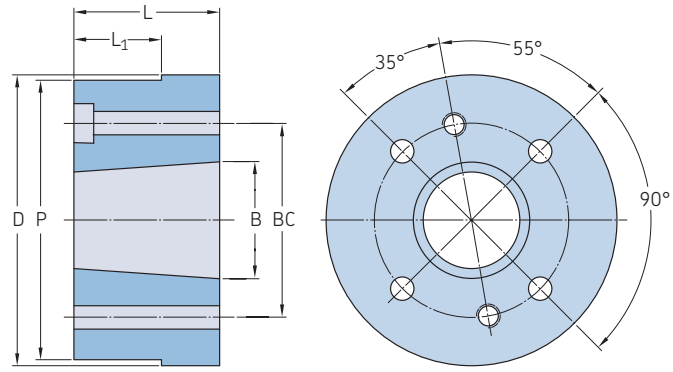

Type 2

Bushing number	Dimensions D	L	B	P	L_1	BC	Type drilling	Approx mass	Mounting	Designation
–	mm						–	kg	–	–
JA	57,2	14,3	34,9	–	–	42,1	1	0,18	Std or reverse mount	**PHH WJA**
SH	76,2	20,6	47,5	–	–	57,2	1	0,45	Std or reverse mount	**PHH WSH**
SDS	88,9	19,1	55,6	–	–	68,3	1	0,57	Std or reverse mount	**PHH WSDS**
SK	111,1	31,8	71,5	–	–	84,1	1	1,36	Std or reverse mount	**PHH WSK**
SF	127,0	31,8	79,4	–	–	98,4	1	1,81	Std or reverse mount	**PHH WSF**
E	158,8	41,3	97,3	–	–	127,0	1	4,08	Std or reverse mount	**PHH WE**
F	177,8	63,5	112,7	–	–	142,9	1	7,26	Std or reverse mount	**PHH WF**
J	196,9	81,0	130,6	–	–	158,8	1	10,21	Std or reverse mount	**PHH WJ**
M	241,3	131,8	164,9	235,0	90,5	200,0	2	22,69	Std mount only	**PHH WM**
N	266,7	158,8	177,5	260,4	114,3	215,9	2	34,03	Std mount only	**PHH WN**
P	330,2	184,2	209,3	–	–	254,0	2	70,33	Std mount only	**PHH WP**
W	393,7	228,6	265,1	–	–	323,9	2	136,12	Std mount only	**PHH WW**
S	495,3	304,8	308,0	476,3	–	381,0	2	253,18	Std mount only	**PHH WS**

SKF FX Keyless Bushings range

FX 10
- Medium torque
- Not self-centering
- Medium surface pressures
- No axial hub movement
- H11 – h11 tolerances

FX 20
- Medium torque
- Self-centering
- H8 – h8 tolerances

FX 30
- Low torque
- Medium surface pressures
- Taper rings only

FX 40
- High torque
- Self-centering
- Medium surface pressures
- H8 – h8 tolerances

FX 41
- Medium torque
- Reduced length
- Medium self-centering
- High surface pressures
- H8 – h8 tolerances

FX 50
- Medium torque
- Self-centering
- Low surface pressures
- No axial hub movement
- H8 – h8 tolerances

FX 51
- Medium torque
- Reduced length
- High surface pressures
- No axial hub movement
- H8 – h8 tolerances

FX 52
- High torque
- Self-centering
- Low-medium surface pressures
- H8 – h8 tolerances

FX 60
- Very high torque
- Self-centering
- Medium surface pressures
- No axial hub movement
- H8 – h8 tolerances

FX 80
- Low torque
- Short length
- Not self-centering
- Low surface pressures
- H8 – h8 tolerances

FX 90
- Low–medium torque
- Short length
- Self-centering
- Low surface pressures
- H8 – h8 tolerances

FX 120
- Medium torque
- Reduced length
- Medium self-centering
- High surface pressures
- H8 – h8 tolerances

FX 130
- Low-medium torque
- h8 tolerances

FX 140
- Medium torque
- Reduced length
- High surface pressures
- H8 – h8 tolerances

FX 190
- High torque
- No axial hub movement
- h8 tolerances

FX 350
- Low-medium torque
- Short length
- Self-centering
- Low surface pressures
- H8 – h8 tolerances

FX 400
- High torque
- Self-centering
- Low surface pressures
- No axial hub movement
- H8 – h8 tolerances

Refer to SKF FX Keyless Bushings PUB PT/P1 10114 EN for other available models.

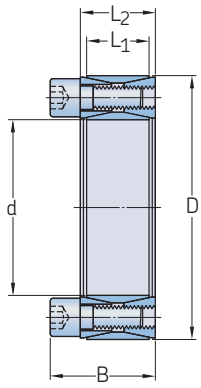

FX10

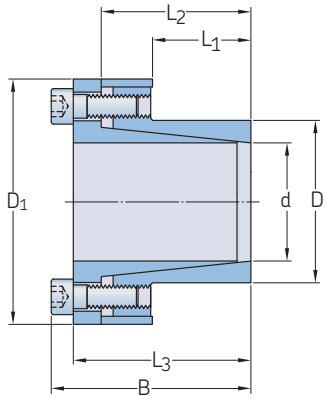

FX20

Bushing no.	Dimensions							Transmissible axial force	Transmissible torque	Shaft surface pressure	Hub surface pressure	Clamp screws	Clamp screws size	Screw tightening torque	Mass	Designation
	d	D	L_1	L_2	L_3	B	D_1	F_t	M_t	P_w	P_n	Quantity		M_s		
–	mm							kN	Nm	N/mm²				Nm	kg	–
FX10	20	47	17	20,0	–	27,5	–	27,0	240	210	90	8	M6	15,0	0,20	**PHF FX10-20X47**
	22	47	17	20,0	–	27,5	–	27,0	300	195	90	8	M6	15,0	0,20	**PHF FX10-22X47**
	24	50	17	20,0	–	27,5	–	30,0	360	195	95	8	M6	15,0	0,30	**PHF FX10-24X50**
	25	50	17	20,0	–	27,5	–	30,0	380	190	95	8	M6	15,0	0,30	**PHF FX10-25X50**
	28	55	17	20,0	–	27,5	–	33,0	470	185	95	10	M6	15,0	0,30	**PHF FX10-28X55**
	30	55	17	20,0	–	27,5	–	33,0	500	175	95	10	M6	15,0	0,30	**PHF FX10-30X55**
	32	60	17	20,0	–	27,5	–	40,0	630	192	105	12	M6	15,0	0,30	**PHF FX10-32X60**
	35	60	17	20,0	–	27,5	–	40,0	700	180	105	12	M6	15,0	0,30	**PHF FX10-35X60**
	38	65	17	20,0	–	27,5	–	46,0	870	188	110	14	M6	15,0	0,40	**PHF FX10-38X65**
	40	65	17	20,0	–	27,5	–	46,0	920	180	110	14	M6	15,0	0,30	**PHF FX10-40X65**
	42	75	20	24,0	–	33,5	–	72,0	1 500	226	125	12	M8	37,0	0,60	**PHF FX10-42X75**
	45	75	20	24,0	–	33,5	–	72,0	1 610	210	125	12	M8	37,0	0,60	**PHF FX10-45X75**
	48	80	20	24,0	–	33,5	–	71,0	1 700	196	115	12	M8	37,0	0,60	**PHF FX10-48X80**
	50	80	20	24,0	–	33,5	–	71,0	1 770	190	115	12	M8	37,0	0,60	**PHF FX10-50X80**
	55	85	20	24,0	–	33,5	–	83,0	2 270	200	130	14	M8	37,0	0,60	**PHF FX10-55X85**
	60	90	20	24,0	–	33,5	–	83,0	2 470	180	120	14	M8	37,0	0,70	**PHF FX10-60X90**
	65	95	20	24,0	–	33,5	–	93,0	3 040	190	130	16	M8	37,0	0,70	**PHF FX10-65X95**
	70	110	24	28,0	–	39,5	–	132,0	4 600	210	130	14	M10	70,0	1,30	**PHF FX10-70X110**
	75	115	24	28,0	–	39,5	–	131,0	4 900	195	125	14	M10	70,0	1,30	**PHF FX10-75X115**
	80	120	24	28,0	–	39,5	–	131,0	5 200	180	120	14	M10	70,0	1,40	**PHF FX10-80X120**
	85	125	24	28,0	–	39,5	–	148,0	6 300	195	130	16	M10	70,0	1,40	**PHF FX10-85X125**
	90	130	24	28,0	–	39,5	–	147,0	6 600	180	125	16	M10	70,0	1,50	**PHF FX10-90X130**
	95	135	24	28,0	–	39,5	–	167,0	7 900	195	135	18	M10	70,0	1,60	**PHF FX10-95X135**
	100	145	26	33,0	–	47,0	–	192,0	9 600	195	135	14	M12	127,0	2,20	**PHF FX10-100X145**
	110	155	26	33,0	–	47,0	–	191,0	10 500	180	125	14	M12	127,0	2,50	**PHF FX10-110X155**
	120	165	26	33,0	–	47,0	–	218,0	13 100	185	135	16	M12	127,0	2,60	**PHF FX10-120X165**
	130	180	34	38,0	–	52,0	–	272,0	17 600	165	115	20	M12	127,0	3,80	**PHF FX10-130X180**
	140	190	34	38,0	–	52,0	–	298,0	20 900	165	125	22	M12	127,0	3,90	**PHF FX10-140X190**
	150	200	34	38,0	–	52,0	–	324,0	24 200	170	125	24	M12	127,0	4,00	**PHF FX10-150X200**
	160	210	34	38,0	–	52,0	–	350,0	28 000	170	130	26	M12	127,0	4,30	**PHF FX10-160X210**
	170	225	38	44,0	–	60,0	–	386,0	32 800	160	120	22	M14	195,0	5,80	**PHF FX10-170X225**
	180	235	38	44,0	–	60,0	–	420,0	37 800	165	125	24	M14	195,0	6,00	**PHF FX10-180X235**
	190	250	46	52,0	–	68,0	–	490,0	46 500	150	115	28	M14	195,0	8,50	**PHF FX10-190X250**
	200	260	46	52,0	–	68,0	–	525,0	52 500	150	115	30	M14	195,0	8,60	**PHF FX10-200X260**
	220	285	50	56,0	–	74,0	–	620,0	68 000	150	115	26	M16	300,0	11,00	**PHF FX10-220X285**
	240	305	50	56,0	–	74,0	–	715,0	85 500	160	125	30	M16	300,0	12,00	**PHF FX10-240X305**
	260	325	50	56,0	–	74,0	–	800,0	104 000	165	130	34	M16	300,0	13,00	**PHF FX10-260X325**
	280	355	60	66,0	–	86,5	–	915,0	128 000	145	115	32	M18	410,0	19,00	**PHF FX10-280X355**
	300	375	60	66,0	–	86,5	–	1020,0	153 000	150	120	36	M18	410,0	20,00	**PHF FX10-300X375**
	320	405	72	78,0	–	100,5	–	1310,0	210 000	150	120	36	M20	590,0	30,00	**PHF FX10-320X405**
	340	425	72	78,0	–	100,5	–	1310,0	224 000	145	115	36	M20	590,0	30,10	**PHF FX10-340X425**
	360	455	84	90,0	–	116,0	–	1630,0	294 000	145	115	36	M22	790,0	42,00	**PHF FX10-360X455**
	380	475	84	90,0	–	116,0	–	1620,0	308 000	135	110	36	M22	790,0	44,00	**PHF FX10-380X475**
	400	495	84	90,0	–	116,0	–	1610,0	322 000	130	105	36	M22	790,0	46,00	**PHF FX10-400X495**
	420	515	84	90,0	–	116,0	–	1780,0	370 000	135	110	40	M22	790,0	50,00	**PHF FX10-420X515**
	440	545	96	102,0	–	130,0	–	2050,0	450 000	130	105	40	M24	1 000,0	65,00	**PHF FX10-440X545**
	460	565	96	102,0	–	130,0	–	2030,0	465 000	125	100	40	M24	1 000,0	67,00	**PHF FX10-460X565**
	480	585	96	102,0	–	130,0	–	2150,0	505 000	125	100	42	M24	1 000,0	71,00	**PHF FX10-480X585**
	500	605	96	102,0	–	130,0	–	2200,0	553 000	125	100	44	M24	1 000,0	73,00	**PHF FX10-500X605**
	520	630	96	102,0	–	130,0	–	2300,0	592 000	125	100	45	M24	1 000,0	80,00	**PHF FX10-520X630**
	540	650	96	102,0	–	130,0	–	2320,0	618 000	120	100	45	M24	1 000,0	82,00	**PHF FX10-540X650**
	560	670	96	102,0	–	130,0	–	2430,0	670 000	120	100	48	M24	1 000,0	85,00	**PHF FX10-560X670**
	580	690	96	102,0	–	130,0	–	2520,0	727 000	120	100	50	M24	1 000,0	88,00	**PHF FX10-580X690**
	600	710	96	102,0	–	130,0	–	2565,0	770 000	120	100	50	M24	1 000,0	91,00	**PHF FX10-600X710**

Bushing no.	Dimensions							Transmissible axial force	Transmissible torque	Shaft surface pressure	Hub surface pressure	Clamp screws	Clamp screws size	Screw tightening torque	Mass	Designation
	d	D	L_1	L_2	L_3	B	D_1	F_t	M_t	P_w	P_n	Quantity		M_s		
–	mm							kN	Nm	N/mm²				Nm	kg	–
FX10	620	730	96	102,0	–	130,0	–	2647,0	818 000	120	100	52	M24	1 000,0	93,00	**PHF FX10-620X730**
	640	750	96	102,0	–	130,0	–	2698,0	860 000	115	100	54	M24	1 000,0	96,00	**PHF FX10-640X750**
	660	770	96	102,0	–	130,0	–	2790,0	919 000	120	100	56	M24	1 000,0	99,00	**PHF FX10-660X770**
	680	790	96	102,0	–	130,0	–	2820,0	955 000	115	100	56	M24	1 000,0	102,00	**PHF FX10-680X790**
	700	810	96	102,0	–	130,0	–	2945,0	1 018 000	115	100	60	M24	1 000,0	104,00	**PHF FX10-700X810**
	720	830	96	102,0	–	130,0	–	2965,0	1 060 000	115	100	60	M24	1 000,0	107,00	**PHF FX10-720X830**
	740	850	96	102,0	–	130,0	–	3065,0	1 128 000	115	100	62	M24	1 000,0	110,00	**PHF FX10-740X850**
	760	870	96	102,0	–	130,0	–	3170,0	1 200 000	115	100	64	M24	1 000,0	113,00	**PHF FX10-760X870**
	780	890	96	102,0	–	130,0	–	3205,0	1 235 000	115	100	65	M24	1 000,0	116,00	**PHF FX10-780X890**
	800	910	96	102,0	–	130,0	–	3260,0	1 287 000	115	100	66	M24	1 000,0	118,00	**PHF FX10-800X910**
	820	930	96	102,0	–	130,0	–	3330,0	1 360 000	115	100	68	M24	1 000,0	121,00	**PHF FX10-820X930**
	840	950	96	102,0	–	130,0	–	3445,0	1 435 000	115	100	70	M24	1 000,0	124,00	**PHF FX10-840X950**
	860	970	96	102,0	–	130,0	–	3525,0	1 510 000	115	100	72	M24	1 000,0	127,00	**PHF FX10-860X970**
	880	990	96	102,0	–	130,0	–	3610,0	1 578 000	115	100	74	M24	1 000,0	129,00	**PHF FX10-880X990**
	900	1 010	96	102,0	–	130,0	–	3660,0	1 635 000	115	100	75	M24	1 000,0	132,00	**PHF FX10-900X1010**
FX20	6	14	10	18,5	21,0	24,0	25	4,5	13	190	80	3	M3	2,0	0,04	**PHF FX20-6X14**
	7	15	12	22,0	25,0	29,0	27	6,5	24	230	110	3	M4	4,9	0,06	**PHF FX20-7X15**
	8	15	12	22,0	25,0	29,0	27	6,7	25	210	110	3	M4	4,9	0,05	**PHF FX20-8X15**
	9	16	14	23,0	26,0	30,0	28	10,0	45	210	120	4	M4	4,9	0,06	**PHF FX20-9X16**
	10	16	14	23,0	26,0	30,0	28	10,0	49	180	120	4	M4	4,9	0,06	**PHF FX20-10X16**
	11	18	14	23,0	26,0	30,0	32	10,0	54	170	105	4	M4	4,9	0,07	**PHF FX20-11X18**
	12	18	14	23,0	26,0	30,0	32	10,0	60	155	105	4	M4	4,9	0,07	**PHF FX20-12X18**
	13	23	14	23,0	26,0	30,0	38	10,0	63	145	85	4	M4	4,9	0,11	**PHF FX20-13X23**
	14	23	14	23,0	26,0	30,0	38	10,0	70	135	85	4	M4	4,9	0,10	**PHF FX20-14X23**
	15	24	16	29,0	36,0	42,0	45	17,1	120	185	120	3	M6	17,0	0,22	**PHF FX20-15X24**
	16	24	16	29,0	36,0	42,0	45	17,1	140	180	120	3	M6	17,0	0,22	**PHF FX20-16X24**
	17	26	18	31,0	38,0	44,0	47	22,0	180	190	125	4	M6	17,0	0,25	**PHF FX20-17X26**
	18	26	18	31,0	38,0	44,0	47	22,0	200	180	125	4	M6	17,0	0,24	**PHF FX20-18X26**
	19	27	18	31,0	38,0	44,0	49	22,0	210	170	120	4	M6	17,0	0,26	**PHF FX20-19X27**
	20	28	18	31,0	38,0	44,0	50	22,0	220	160	115	4	M6	17,0	0,27	**PHF FX20-20X28**
	22	32	25	38,0	45,0	51,0	54	22,0	250	115	80	4	M6	17,0	0,34	**PHF FX20-22X32**
	24	34	25	38,0	45,0	51,0	56	22,0	270	105	75	4	M6	17,0	0,36	**PHF FX20-24X34**
	25	34	25	38,0	45,0	51,0	56	22,0	290	100	75	4	M6	17,0	0,35	**PHF FX20-25X34**
	28	39	25	38,0	45,0	51,0	61	33,0	465	135	100	6	M6	17,0	0,48	**PHF FX20-28X39**
	30	41	25	38,0	45,0	51,0	62	33,0	510	125	90	6	M6	17,0	0,48	**PHF FX20-30X41**
	32	43	25	38,0	45,0	51,0	65	33,0	540	120	90	6	M6	17,0	0,47	**PHF FX20-32X43**
	35	47	32	45,0	52,0	58,0	69	45,0	790	105	80	8	M6	17,0	0,58	**PHF FX20-35X47**
	38	50	32	45,0	52,0	58,0	72	45,0	860	100	75	8	M6	17,0	0,61	**PHF FX20-38X50**
	40	53	32	45,0	52,0	58,0	75	45,0	900	95	70	8	M6	17,0	0,68	**PHF FX20-40X53**
	42	55	32	45,0	52,0	58,0	78	45,0	950	90	70	8	M6	17,0	0,76	**PHF FX20-42X55**
	45	59	45	62,0	70,0	78,0	86	84,0	1 890	110	85	8	M8	41,0	1,20	**PHF FX20-45X59**
	48	62	45	62,0	70,0	78,0	87	84,0	2 010	105	80	8	M8	41,0	1,20	**PHF FX20-48X62**
	50	65	45	62,0	70,0	78,0	92	84,0	2 100	100	75	8	M8	41,0	1,40	**PHF FX20-50X65**
	55	71	55	72,0	80,0	88,0	98	94,0	2 600	85	65	9	M8	41,0	1,60	**PHF FX20-55X71**
	60	77	55	72,0	80,0	88,0	104	94,0	2 840	75	60	9	M8	41,0	1,80	**PHF FX20-60X77**
	65	84	55	72,0	80,0	88,0	111	94,0	3 070	70	55	9	M8	41,0	2,10	**PHF FX20-65X84**
	70	90	65	86,0	96,0	106,0	119	150,0	5 250	90	70	9	M10	83,0	3,00	**PHF FX20-70X90**
	75	95	65	86,0	96,0	106,0	126	150,0	5 600	80	65	9	M10	83,0	3,00	**PHF FX20-75X95**
	80	100	65	86,0	96,0	106,0	131	200,0	8 020	100	80	12	M10	83,0	3,50	**PHF FX20-80X100**
	85	106	65	86,0	96,0	106,0	137	200,0	8 500	95	75	12	M10	83,0	3,60	**PHF FX20-85X106**
	90	112	65	86,0	96,0	106,0	144	200,0	9 000	90	75	12	M10	83,0	3,90	**PHF FX20-90X112**
	95	120	65	86,0	96,0	106,0	149	230,0	11 000	100	80	14	M10	83,0	4,40	**PHF FX20-95X120**
	100	125	65	86,0	96,0	106,0	154	300,0	15 000	120	95	18	M10	83,0	4,60	**PHF FX20-100X125**
	110	140	90	114,0	128,0	140,0	180	290,0	16 000	80	65	12	M12	145,0	8,70	**PHF FX20-110X140**
	120	155	90	114,0	128,0	140,0	198	290,0	17 500	70	55	12	M12	145,0	10,60	**PHF FX20-120X155**
	130	165	90	114,0	128,0	140,0	208	384,0	25 000	90	70	16	M12	145,0	11,30	**PHF FX20-130X165**

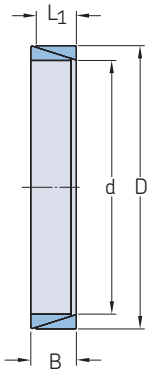

FX30

Bushing no.	Dimensions d	D	L_1	B	Transmissible axial force F_t	Transmissible torque M_t	Shaft surface pressure P_w	Hub surface pressure P_n	Mass	Designation
–	mm				kN	Nm	N/mm²		kg	–
FX30	6	9	3,7	4,5	0,8	3	115	75	0,002	**PHF FX30-6X9**
	7	10	3,7	4,5	0,9	3	105	70	0,002	**PHF FX30-7X10**
	8	11	3,7	4,5	1,2	5	120	90	0,002	**PHF FX30-8X11**
	9	12	3,7	4,5	1,8	8	140	105	0,002	**PHF FX30-9X12**
	10	13	3,7	4,5	1,9	10	135	105	0,002	**PHF FX30-10X13**
	12	15	3,7	4,5	1,9	11	115	90	0,002	**PHF FX30-12X15**
	13	16	3,7	4,5	2,0	13	110	90	0,002	**PHF FX30-13X16**
	14	18	5,3	6,3	3,2	22	115	90	0,005	**PHF FX30-14X18**
	15	19	5,3	6,3	3,2	24	110	85	0,005	**PHF FX30-15X19**
	16	20	5,3	6,3	3,4	27	105	85	0,006	**PHF FX30-16X20**
	17	21	5,3	6,3	3,5	30	105	85	0,006	**PHF FX30-17X21**
	18	22	5,3	6,3	3,6	32	100	80	0,007	**PHF FX30-18X22**
	19	24	5,3	6,3	5,2	49	140	110	0,007	**PHF FX30-19X24**
	20	25	5,3	6,3	5,3	53	135	105	0,009	**PHF FX30-20X25**
	22	26	5,3	6,3	6,0	66	135	115	0,007	**PHF FX30-22X26**
	24	28	5,3	6,3	6,1	73	130	110	0,008	**PHF FX30-24X28**
	25	30	5,3	6,3	5,8	72	115	95	0,009	**PHF FX30-25X30**
	28	32	5,3	6,3	6,3	86	115	100	0,010	**PHF FX30-28X32**
	30	35	5,3	6,3	6,1	91	100	85	0,011	**PHF FX30-30X35**
	32	36	5,3	6,3	8,2	131	130	115	0,011	**PHF FX30-32X36**
	35	40	6,0	7,0	9,8	171	125	110	0,016	**PHF FX30-35X40**
	36	42	6,0	7,0	9,4	169	115	100	0,021	**PHF FX30-36X42**
	38	44	6,0	7,0	9,6	181	110	95	0,021	**PHF FX30-38X44**
	40	45	6,6	8,0	11,6	231	115	105	0,021	**PHF FX30-40X45**
	42	48	6,6	8,0	11,2	235	110	95	0,026	**PHF FX30-42X48**
	45	52	8,6	10,0	15,7	353	105	95	0,045	**PHF FX30-45X52**
	48	55	8,6	10,0	23,8	572	155	135	0,043	**PHF FX30-48X55**
	50	57	8,6	10,0	24,1	602	150	130	0,045	**PHF FX30-50X57**
	55	62	8,6	10,0	24,4	670	140	125	0,049	**PHF FX30-55X62**
	56	64	10,4	12,0	28,2	790	130	115	0,070	**PHF FX30-56X64**
	60	68	10,4	12,0	28,6	860	125	110	0,070	**PHF FX30-60X68**
	63	71	10,4	12,0	28,8	910	120	105	0,080	**PHF FX30-63X71**
	65	73	10,4	12,0	29,2	950	115	100	0,090	**PHF FX30-65X73**
	70	79	12,2	14,0	39,4	1 380	125	110	0,115	**PHF FX30-70X79**
	71	80	12,2	14,0	39,4	1 400	120	110	0,110	**PHF FX30-71X80**
	75	84	12,2	14,0	38,6	1 450	115	100	0,120	**PHF FX30-75X84**
	80	91	15,0	17,0	55,0	2 200	125	105	0,210	**PHF FX30-80X91**
	85	96	15,0	17,0	56,4	2 400	120	105	0,210	**PHF FX30-85X96**
	90	101	15,0	17,0	60,5	2 730	120	105	0,220	**PHF FX30-90X101**
	95	106	15,0	17,0	64,2	3 050	120	110	0,230	**PHF FX30-95X106**
	100	114	18,7	21,0	84,0	4 200	120	105	0,390	**PHF FX30-100X114**
	110	124	18,7	21,0	93,6	5 150	120	105	0,420	**PHF FX30-110X124**
	120	134	18,7	21,0	100,8	6 050	120	105	0,460	**PHF FX30-120X134**
	130	148	25,3	28,0	147,6	9 600	120	105	0,860	**PHF FX30-130X148**
	140	158	25,3	28,0	158,5	11 000	120	105	0,960	**PHF FX30-140X158**
	150	168	25,3	28,0	172,0	12 900	120	105	1,000	**PHF FX30-150X168**
	160	178	25,3	28,0	182,5	14 600	120	110	1,000	**PHF FX30-160X178**
	170	191	30,0	33,0	229,0	19 500	120	105	1,540	**PHF FX30-170X191**
	180	201	30,0	33,0	236,0	21 300	120	105	1,500	**PHF FX30-180X201**
	190	211	30,0	33,0	255,0	24 200	120	110	1,800	**PHF FX30-190X211**
	200	224	34,8	38,0	310,0	31 000	120	105	2,400	**PHF FX30-200X224**
	210	234	34,8	38,0	333,0	35 000	120	110	2,500	**PHF FX30-210X234**
	220	244	34,8	38,0	345,0	38 000	120	110	2,600	**PHF FX30-220X244**
	230	257	39,5	43,0	408,0	47 000	120	105	3,400	**PHF FX30-230X257**

Bushing no.	Dimensions				Transmissible axial force	Transmissible torque	Shaft surface pressure	Hub surface pressure	Mass	Designation
	d	D	L_1	B	F_t	M_t	P_w	P_n		
–	mm				kN	Nm	N/mm²		kg	–
FX30	240	267	39,5	43,0	425,0	51 000	120	110	3,800	**PHF FX30-240X267**
	250	280	44,0	48,0	415,0	52 000	100	90	4,800	**PHF FX30-250X280**
	260	290	44,0	48,0	435,0	56 500	100	90	4,900	**PHF FX30-260X290**
	270	300	44,0	48,0	450,0	61 000	100	90	5,000	**PHF FX30-270X300**
	280	313	49,0	53,0	520,0	72 500	100	90	6,400	**PHF FX30-280X313**
	290	323	49,0	53,0	535,0	77 500	100	90	6,500	**PHF FX30-290X323**
	300	333	49,0	53,0	555,0	83 000	100	90	6,800	**PHF FX30-300X333**
	320	360	59,0	65,0	710,0	114 000	100	90	11,000	**PHF FX30-320X360**
	340	380	59,0	65,0	755,0	128 500	100	90	11,500	**PHF FX30-340X380**
	360	400	59,0	65,0	800,0	144 000	100	90	12,300	**PHF FX30-360X400**
	380	420	59,0	65,0	845,0	160 500	100	90	13,000	**PHF FX30-380X420**
	400	440	59,0	65,0	890,0	178 000	100	90	13,700	**PHF FX30-400X440**
	420	460	59,0	65,0	935,0	196 000	100	90	14,100	**PHF FX30-420X460**
	440	480	59,0	65,0	980,0	215 000	100	90	14,800	**PHF FX30-440X480**
	460	500	59,0	65,0	1020,0	235 000	100	90	15,500	**PHF FX30-460X500**
	480	520	59,0	65,0	1070,0	256 000	100	90	16,000	**PHF FX30-480X520**
	500	540	59,0	65,0	1110,0	278 000	100	90	16,700	**PHF FX30-500X540**
	520	570	73,0	80,0	1430,0	372 000	100	90	27,000	**PHF FX30-520X570**
	540	590	73,0	80,0	1480,0	400 000	100	90	28,000	**PHF FX30-540X590**

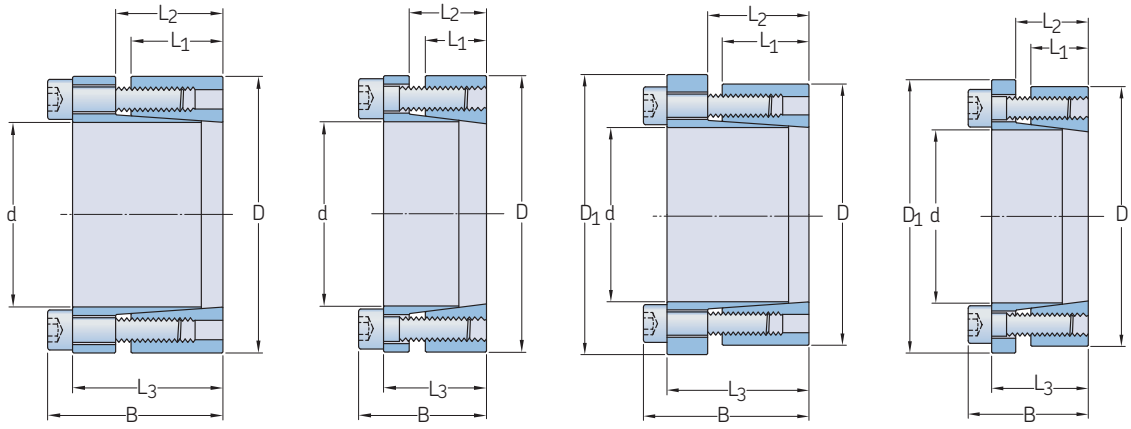

Bushing no.	Dimensions							Transmissible axial force	Transmissible torque	Shaft surface pressure	Hub surface pressure	Clamp screws	Clamp screws size	Screw tightening torque	Mass	Designation
	d	D	L_1	L_2	L_3	B	D_1	F_t	M_t	P_w	P_n	Quantity		M_s		
–	mm							kN	Nm	N/mm²				Nm	kg	–
FX40	20	47	26	29,0	42,0	48,0	–	54,0	540	250	105	6	M6	17,0	0,40	**PHF FX40-20X47**
	22	47	26	29,0	42,0	48,0	–	54,0	600	230	105	6	M6	17,0	0,40	**PHF FX40-22X47**
	24	50	26	29,0	42,0	48,0	–	54,0	650	210	100	6	M6	17,0	0,40	**PHF FX40-24X50**
	25	50	26	29,0	42,0	48,0	–	54,0	680	200	100	6	M6	17,0	0,40	**PHF FX40-25X50**
	28	55	26	29,0	42,0	48,0	–	54,0	760	180	95	6	M6	17,0	0,50	**PHF FX40-28X55**
	30	55	26	29,0	42,0	48,0	–	54,0	820	170	95	6	M6	17,0	0,50	**PHF FX40-30X55**
	32	60	26	29,0	42,0	48,0	–	82,0	1 310	235	125	9	M6	17,0	0,60	**PHF FX40-32X60**
	35	60	26	29,0	42,0	48,0	–	82,0	1 440	215	125	9	M6	17,0	0,50	**PHF FX40-35X60**
	38	65	26	29,0	42,0	48,0	–	82,0	1 560	200	115	9	M6	17,0	0,60	**PHF FX40-38X65**
	40	65	26	29,0	42,0	48,0	–	82,0	1 640	190	115	9	M6	17,0	0,60	**PHF FX40-40X65**
	42	75	30	34,4	51,0	59,0	–	101,0	2 130	215	120	6	M8	41,0	1,00	**PHF FX40-42X75**
	45	75	30	34,4	51,0	59,0	–	101,0	2 280	200	120	6	M8	41,0	1,00	**PHF FX40-45X75**
	48	80	30	34,4	51,0	59,0	–	101,0	2 430	190	115	6	M8	41,0	1,10	**PHF FX40-48X80**
	50	80	30	34,4	51,0	59,0	–	101,0	2 530	180	115	6	M8	41,0	1,00	**PHF FX40-50X80**
	55	85	30	34,4	51,0	59,0	–	152,0	4 180	245	160	9	M8	41,0	1,10	**PHF FX40-55X85**
	60	90	30	34,4	51,0	59,0	–	152,0	4 560	225	150	9	M8	41,0	1,20	**PHF FX40-60X90**
	65	95	30	34,4	51,0	59,0	–	152,0	4 940	210	145	9	M8	41,0	1,30	**PHF FX40-65X95**
	70	110	40	45,0	56,0	66,0	–	186,0	6 500	175	110	7	M10	83,0	2,20	**PHF FX40-70X110**
	75	115	40	45,0	56,0	66,0	–	186,0	9 000	165	110	7	M10	83,0	2,50	**PHF FX40-75X115**
	80	120	40	45,0	56,0	66,0	–	186,0	7 400	155	100	7	M10	83,0	2,60	**PHF FX40-80X120**
	85	125	40	45,0	56,0	66,0	–	213,0	9 000	170	115	8	M10	83,0	2,80	**PHF FX40-85X125**
	90	130	40	45,0	56,0	66,0	–	213,0	9 600	160	110	8	M10	83,0	2,70	**PHF FX40-90X130**
	95	135	40	45,0	56,0	66,0	–	267,0	12 600	185	130	10	M10	83,0	2,90	**PHF FX40-95X135**
	100	145	46	52,0	65,0	77,0	–	270,0	13 300	160	105	7	M12	145,0	3,90	**PHF FX40-100X145**
	110	155	46	52,0	65,0	77,0	–	270,0	14 700	140	100	7	M12	145,0	4,20	**PHF FX40-110X155**
	120	165	46	52,0	65,0	77,0	–	309,0	18 400	150	110	8	M12	145,0	4,80	**PHF FX40-120X165**
	130	180	46	52,0	65,0	77,0	–	388,0	25 100	175	125	10	M12	145,0	5,00	**PHF FX40-130X180**
	140	190	51	58,5	73,5	87,5	–	586,0	40 150	220	160	11	M14	230,0	6,50	**PHF FX40-140X190**
FX41	20	47	17	22,0	28,0	34,0	–	38,0	380	295	125	5	M6	14,0	0,30	**PHF FX41-20X47**
	22	47	17	22,0	28,0	34,0	–	38,0	410	270	125	5	M6	14,0	0,30	**PHF FX41-22X47**
	24	50	17	22,0	28,0	34,0	–	38,0	450	245	120	5	M6	14,0	0,30	**PHF FX41-24X50**
	25	50	17	22,0	28,0	34,0	–	45,6	570	285	140	6	M6	14,0	0,30	**PHF FX41-25X50**
	28	55	17	22,0	28,0	34,0	–	45,6	630	255	130	6	M6	14,0	0,40	**PHF FX41-28X55**
	30	55	17	22,0	28,0	34,0	–	45,6	660	235	130	6	M6	14,0	0,40	**PHF FX41-30X55**
	32	60	17	22,0	28,0	34,0	–	60,5	970	295	155	8	M6	14,0	0,40	**PHF FX41-32X60**
	35	60	17	22,0	28,0	34,0	–	60,5	1 060	270	155	8	M6	14,0	0,40	**PHF FX41-35X60**
	38	65	17	22,0	28,0	34,0	–	60,5	1 150	250	145	8	M6	14,0	0,50	**PHF FX41-38X65**
	40	65	17	22,0	28,0	34,0	–	60,5	1 210	235	145	8	M6	14,0	0,50	**PHF FX41-40X65**
	42	75	20	25,0	33,0	41,0	–	98,0	2 050	300	170	7	M8	35,0	0,80	**PHF FX41-42X75**
	45	75	20	25,0	33,0	41,0	–	98,0	2 200	290	170	7	M8	35,0	0,70	**PHF FX41-45X75**
	48	80	20	25,0	33,0	41,0	–	98,0	2 350	270	160	7	M8	35,0	0,80	**PHF FX41-48X80**
	50	80	20	25,0	33,0	41,0	–	98,0	2 450	260	160	7	M8	35,0	0,80	**PHF FX41-50X80**
	55	85	20	25,0	33,0	41,0	–	112,0	3 080	270	175	8	M8	35,0	0,90	**PHF FX41-55X85**
	60	90	20	25,0	33,0	41,0	–	112,0	3 360	245	165	8	M8	35,0	0,90	**PHF FX41-60X90**
	65	95	20	25,0	33,0	41,0	–	126,0	4 090	255	175	9	M8	35,0	1,00	**PHF FX41-65X95**
	70	110	24	30,0	40,0	50,0	–	179,0	6 300	280	180	8	M10	70,0	1,90	**PHF FX41-70X110**
	75	115	24	30,0	40,0	50,0	–	179,0	6 700	260	170	8	M10	70,0	2,00	**PHF FX41-75X115**
	80	120	24	30,0	40,0	50,0	–	179,0	7 150	250	170	8	M10	70,0	2,00	**PHF FX41-80X120**
	85	125	24	30,0	40,0	50,0	–	200,0	8 500	260	180	9	M10	70,0	2,00	**PHF FX41-85X125**
	90	130	24	30,0	40,0	50,0	–	200,0	9 100	250	170	9	M10	70,0	2,20	**PHF FX41-90X130**
	95	135	24	30,0	40,0	50,0	–	224,0	10 600	260	180	10	M10	70,0	2,30	**PHF FX41-95X135**
	100	145	26	32,0	44,0	56,0	–	268,0	13 400	270	190	8	M12	125,0	3,00	**PHF FX41-100X145**
	110	155	26	32,0	44,0	56,0	–	268,0	14 600	240	180	8	M12	125,0	3,20	**PHF FX41-110X155**

Bushing no.	Dimensions							Transmissible axial force	Transmissible torque	Shaft surface pressure	Hub surface pressure	Clamp screws	Clamp screws size	Screw tightening torque	Mass	Designation
	d	D	L_1	L_2	L_3	B	D_1	F_t	M_t	P_w	P_n	Quantity		M_s		
–	mm							kN	Nm	N/mm²				Nm	kg	–
FX41	120	165	26	32,0	44,0	56,0	–	298,0	17 900	250	180	9	M12	125,0	3,40	**PHF FX41-120X165**
	130	180	34	40,0	54,0	64,0	–	400,0	26 000	240	170	12	M12	125,0	5,20	**PHF FX41-130X180**
	140	190	34	40,0	54,0	68,0	–	384,0	27 000	210	150	9	M14	190,0	5,40	**PHF FX41-140X190**
	150	200	34	40,0	54,0	68,0	–	440,0	33 000	230	170	10	M14	190,0	5,70	**PHF FX41-150X200**
	160	210	34	40,0	54,0	68,0	–	479,0	38 000	230	170	11	M14	190,0	6,00	**PHF FX41-160X210**
	170	225	44	50,0	64,0	78,0	–	530,0	45 000	180	130	12	M14	190,0	8,30	**PHF FX41-170X225**
	180	235	44	50,0	64,0	78,0	–	530,0	47 000	170	130	12	M14	190,0	8,80	**PHF FX41-180X235**
	190	250	44	50,0	64,0	78,0	–	660,0	62 900	210	150	15	M14	190,0	10,00	**PHF FX41-190X250**
	200	260	44	50,0	64,0	78,0	–	660,0	66 000	190	150	15	M14	190,0	10,50	**PHF FX41-200X260**
FX50	20	47	26	29,0	42,0	48,0	53	33,6	330	155	65	6	M6	17,0	0,50	**PHF FX50-20X47**
	22	47	26	29,0	42,0	48,0	53	33,6	370	145	65	6	M6	17,0	0,50	**PHF FX50-22X47**
	24	50	26	29,0	42,0	48,0	56	33,6	400	140	60	6	M6	17,0	0,50	**PHF FX50-24X50**
	25	50	26	29,0	42,0	48,0	56	33,6	420	125	60	6	M6	17,0	0,50	**PHF FX50-25X50**
	28	55	26	29,0	42,0	48,0	61	33,6	470	110	60	6	M6	17,0	0,60	**PHF FX50-28X55**
	30	55	26	29,0	42,0	48,0	61	33,6	510	105	60	6	M6	17,0	0,60	**PHF FX50-30X55**
	32	60	26	29,0	42,0	48,0	66	51,0	810	145	80	9	M6	17,0	0,70	**PHF FX50-32X60**
	35	60	26	29,0	42,0	48,0	66	51,0	890	135	80	9	M6	17,0	0,60	**PHF FX50-35X60**
	38	65	26	29,0	42,0	48,0	71	51,0	970	125	70	9	M6	17,0	0,80	**PHF FX50-38X65**
	40	65	26	29,0	42,0	48,0	71	51,0	1 020	120	70	9	M6	17,0	0,60	**PHF FX50-40X65**
	42	75	30	34,4	51,0	59,0	81	62,8	1 320	135	75	6	M8	41,0	1,20	**PHF FX50-42X75**
	45	75	30	34,4	51,0	59,0	81	62,8	1 410	125	75	6	M8	41,0	1,10	**PHF FX50-45X75**
	48	80	30	34,4	51,0	59,0	86	62,8	1 510	120	70	6	M8	41,0	1,30	**PHF FX50-48X80**
	50	80	30	34,4	51,0	59,0	86	62,8	1 570	110	70	6	M8	41,0	1,10	**PHF FX50-50X80**
	55	85	30	34,4	51,0	59,0	91	94,6	2 600	150	100	9	M8	41,0	1,20	**PHF FX50-55X85**
	60	90	30	34,4	51,0	59,0	96	94,6	2 830	140	95	9	M8	41,0	1,30	**PHF FX50-60X90**
	65	95	30	34,4	51,0	59,0	102	94,6	3 070	130	90	9	M8	41,0	1,40	**PHF FX50-65X95**
	70	110	40	45,0	56,0	66,0	117	116,0	4 000	110	70	7	M10	83,0	2,50	**PHF FX50-70X110**
	75	115	40	45,0	56,0	66,0	122	116,0	4 300	100	65	7	M10	83,0	2,60	**PHF FX50-75X115**
	80	120	40	45,0	56,0	66,0	127	116,0	4 600	100	65	7	M10	83,0	2,80	**PHF FX50-80X120**
	85	125	40	45,0	56,0	66,0	132	133,0	5 600	105	70	8	M10	83,0	2,80	**PHF FX50-85X125**
	90	130	40	45,0	56,0	66,0	137	133,0	6 000	100	70	8	M10	83,0	3,00	**PHF FX50-90X130**
	95	135	40	45,0	56,0	66,0	142	166,8	7 900	115	80	10	M10	83,0	3,00	**PHF FX50-95X135**
	100	145	46	52,0	65,0	77,0	153	169,0	8 470	100	65	7	M12	145,0	5,50	**PHF FX50-100X145**
	110	155	46	52,0	65,0	77,0	163	169,0	9 200	90	65	7	M12	145,0	4,80	**PHF FX50-110X155**
	120	165	46	52,0	65,0	77,0	173	193,0	11 600	90	70	8	M12	145,0	5,50	**PHF FX50-120X165**
	130	180	46	52,0	65,0	77,0	188	242,0	15 700	110	80	10	M12	145,0	6,00	**PHF FX50-130X180**
	140	190	51	58,5	73,5	87,5	199	366,0	25 300	135	100	11	M14	230,0	7,50	**PHF FX50-140X190**
FX51	20	47	17	22,0	28,0	34,0	56	28,0	280	220	95	5	M6	17,0	0,30	**PHF FX51-20X47**
	22	47	17	22,0	28,0	34,0	56	28,0	300	200	95	5	M6	17,0	0,30	**PHF FX51-22X47**
	24	50	17	22,0	28,0	34,0	59	28,0	330	180	90	5	M6	17,0	0,30	**PHF FX51-24X50**
	25	50	17	22,0	28,0	34,0	59	34,0	420	210	105	6	M6	17,0	0,30	**PHF FX51-25X50**
	28	55	17	22,0	28,0	34,0	64	34,0	470	190	95	6	M6	17,0	0,40	**PHF FX51-28X55**
	30	55	17	22,0	28,0	34,0	64	34,0	500	175	95	6	M6	17,0	0,40	**PHF FX51-30X55**
	32	60	17	22,0	28,0	34,0	69	45,0	720	220	115	8	M6	17,0	0,40	**PHF FX51-32X60**
	35	60	17	22,0	28,0	34,0	69	45,0	790	200	115	8	M6	17,0	0,40	**PHF FX51-35X60**
	38	65	17	22,0	28,0	34,0	74	45,0	850	185	105	8	M6	17,0	0,50	**PHF FX51-38X65**
	40	65	17	22,0	28,0	34,0	74	45,0	900	175	105	8	M6	17,0	0,50	**PHF FX51-40X65**
	42	75	20	25,0	33,0	41,0	84	73,0	1 530	225	125	7	M8	41,0	0,80	**PHF FX51-42X75**
	45	75	20	25,0	33,0	41,0	84	73,0	1 650	215	125	7	M8	41,0	0,70	**PHF FX51-45X75**
	48	80	20	25,0	33,0	41,0	89	73,0	1 760	200	120	7	M8	41,0	0,80	**PHF FX51-48X80**
	50	80	20	25,0	33,0	41,0	89	73,0	1 830	195	120	7	M8	41,0	0,80	**PHF FX51-50X80**
	55	85	20	25,0	33,0	41,0	94	83,5	2 300	200	130	8	M8	41,0	0,90	**PHF FX51-55X85**
	60	90	20	25,0	33,0	41,0	99	83,5	2 510	185	125	8	M8	41,0	0,90	**PHF FX51-60X90**
	65	95	20	25,0	33,0	41,0	104	94,0	3 060	190	130	9	M8	41,0	1,00	**PHF FX51-65X95**
	70	110	24	30,0	40,0	50,0	119	133,0	4 670	210	135	8	M10	83,0	1,90	**PHF FX51-70X110**
	75	115	24	30,0	40,0	50,0	124	133,0	5 000	195	125	8	M10	83,0	2,00	**PHF FX51-75X115**
	80	120	24	30,0	40,0	50,0	129	133,0	5 300	185	125	8	M10	83,0	2,00	**PHF FX51-80X120**
	85	125	24	30,0	40,0	50,0	134	148,0	6 300	195	135	9	M10	83,0	2,00	**PHF FX51-85X125**
	90	130	24	30,0	40,0	50,0	139	148,0	6 750	185	130	9	M10	83,0	2,20	**PHF FX51-90X130**
	95	135	24	30,0	40,0	50,0	144	166,0	7 900	195	135	10	M10	83,0	2,30	**PHF FX51-95X135**
	100	145	26	32,0	44,0	56,0	154	194,0	9 700	200	140	8	M12	145,0	3,00	**PHF FX51-100X145**
	110	155	26	32,0	44,0	56,0	164	194,0	10 600	180	130	8	M12	145,0	3,20	**PHF FX51-110X155**
	120	165	26	32,0	44,0	56,0	174	216,0	13 000	185	135	9	M12	145,0	3,40	**PHF FX51-120X165**
	130	180	34	40,0	54,0	64,0	189	290,0	18 900	175	125	12	M12	145,0	5,20	**PHF FX51-130X180**
	140	190	34	40,0	54,0	68,0	199	290,0	20 500	165	120	9	M14	230,0	5,40	**PHF FX51-140X190**
	150	200	34	40,0	54,0	68,0	209	333,0	25 000	175	130	10	M14	230,0	5,70	**PHF FX51-150X200**
	160	210	34	40,0	54,0	68,0	219	362,0	29 000	180	135	11	M14	230,0	6,00	**PHF FX51-160X210**
	170	225	44	50,0	64,0	78,0	234	400,0	34 000	140	105	12	M14	230,0	8,30	**PHF FX51-170X225**
	180	235	44	50,0	64,0	78,0	244	400,0	36 000	135	105	12	M14	230,0	8,80	**PHF FX51-180X235**
	190	250	44	50,0	64,0	78,0	259	500,0	47 500	160	120	15	M14	230,0	10,00	**PHF FX51-190X250**
	200	260	44	50,0	64,0	78,0	269	500,0	50 000	150	115	15	M14	230,0	10,50	**PHF FX51-200X260**
FX52	14	55	17	22,0	30,0	38,0	62	18,1	120	205	55	3	M8	25,0	0,50	**PHF FX52-14X55**
	16	55	17	22,0	30,0	38,0	62	18,1	140	180	55	3	M8	25,0	0,50	**PHF FX52-16X55**

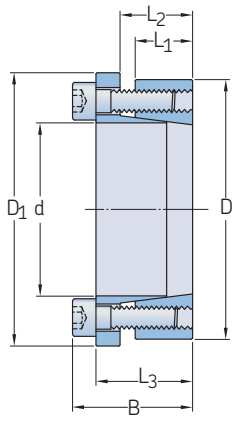

FX52

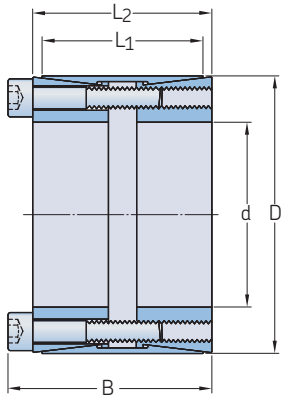

FX60

Bushing no.	Dimensions							Transmissible axial force	Transmissible torque	Shaft surface pressure	Hub surface pressure	Clamp screws	Clamp screws size	Screw tightening torque	Mass	Designation
	d	D	L_1	L_2	L_3	B	D_1	F_t	M_t	P_w	P_n	Quantity		M_s		
–	mm							kN	Nm	N/mm²				Nm	kg	–
FX52	18	55	17	22,0	30,0	38,0	62	18,1	150	160	55	3	M8	25,0	0,50	**PHF FX52-18X55**
	19	55	17	22,0	30,0	38,0	62	18,1	160	150	55	3	M8	25,0	0,50	**PHF FX52-19X55**
	20	55	17	22,0	30,0	38,0	62	18,1	170	145	55	3	M8	25,0	0,50	**PHF FX52-20X55**
	22	55	17	22,0	30,0	38,0	62	25,3	280	185	75	3	M8	35,0	0,50	**PHF FX52-22X55**
	24	55	17	22,0	30,0	38,0	62	25,3	300	170	75	3	M8	35,0	0,50	**PHF FX52-24X55**
	25	55	17	22,0	30,0	38,0	62	25,3	310	165	75	3	M8	35,0	0,50	**PHF FX52-25X55**
	28	55	17	22,0	30,0	38,0	62	31,4	430	175	90	3	M8	41,0	0,40	**PHF FX52-28X55**
	30	55	17	22,0	30,0	38,0	62	31,4	470	165	90	3	M8	41,0	0,40	**PHF FX52-30X55**
	24	65	17	22,0	30,0	38,0	72	37,4	440	245	90	5	M8	30,0	0,70	**PHF FX52-24X65**
	25	65	17	22,0	30,0	38,0	72	37,4	460	235	90	5	M8	30,0	0,70	**PHF FX52-25X65**
	28	65	17	22,0	30,0	38,0	72	43,6	600	245	105	5	M8	35,0	0,60	**PHF FX52-28X65**
	30	65	17	22,0	30,0	38,0	72	43,6	640	230	105	5	M8	35,0	0,60	**PHF FX52-30X65**
	32	65	17	22,0	30,0	38,0	72	43,6	690	215	105	5	M8	35,0	0,60	**PHF FX52-32X65**
	35	65	17	22,0	30,0	38,0	72	52,5	910	235	130	5	M8	41,0	0,50	**PHF FX52-35X65**
	38	65	17	22,0	30,0	38,0	72	52,5	990	220	130	5	M8	41,0	0,50	**PHF FX52-38X65**
	40	65	17	22,0	30,0	38,0	72	52,5	1 050	205	130	5	M8	41,0	0,50	**PHF FX52-40X65**
	30	80	20	25,0	33,0	41,0	87	52,4	780	235	90	7	M8	30,0	1,00	**PHF FX52-30X80**
	32	80	20	25,0	33,0	41,0	87	52,4	830	220	90	7	M8	30,0	1,00	**PHF FX52-32X80**
	35	80	20	25,0	33,0	41,0	87	61,0	1 060	230	100	7	M8	35,0	1,00	**PHF FX52-35X80**
	38	80	20	25,0	33,0	41,0	87	61,0	1 150	215	100	7	M8	35,0	1,00	**PHF FX52-38X80**
	40	80	20	25,0	33,0	41,0	87	61,0	1 220	205	100	7	M8	35,0	0,90	**PHF FX52-40X80**
	42	80	20	25,0	33,0	41,0	87	73,5	1 540	235	120	7	M8	41,0	0,90	**PHF FX52-42X80**
	45	80	20	25,0	33,0	41,0	87	73,5	1 650	220	120	7	M8	41,0	0,80	**PHF FX52-45X80**
	48	80	20	25,0	33,0	41,0	87	73,5	1 760	205	120	7	M8	41,0	0,80	**PHF FX52-48X80**
	50	80	20	25,0	33,0	41,0	87	73,5	1 830	195	120	7	M8	41,0	0,80	**PHF FX52-50X80**
FX60	25	50	39	45,0	–	51,0	–	76,0	950	245	122	8	M6	17,0	0,50	**PHF FX60-25X50**
	28	55	39	45,0	–	51,0	–	76,0	1 070	219	111	8	M6	17,0	0,60	**PHF FX60-28X55**
	30	55	39	45,0	–	51,0	–	76,0	1 150	204	111	8	M6	17,0	0,60	**PHF FX60-30X55**
	35	60	39	45,0	–	51,0	–	76,0	1 340	175	102	8	M6	17,0	0,70	**PHF FX60-35X60**
	38	65	39	45,0	–	51,0	–	76,0	1 450	161	94	8	M6	17,0	0,70	**PHF FX60-38X65**
	40	65	39	45,0	–	51,0	–	76,0	1 530	153	94	8	M6	17,0	0,70	**PHF FX60-40X65**
	42	75	56	64,0	–	72,0	–	141,0	2 970	188	105	8	M8	41,0	1,00	**PHF FX60-42X75**
	45	75	56	64,0	–	72,0	–	141,0	3 150	175	105	8	M8	41,0	0,90	**PHF FX60-45X75**
	48	80	56	64,0	–	72,0	–	166,0	4 000	164	98	8	M8	41,0	1,40	**PHF FX60-48X80**
	50	80	56	64,0	–	72,0	–	166,0	4 150	158	98	8	M8	41,0	1,30	**PHF FX60-50X80**
	55	85	56	64,0	–	72,0	–	166,0	4 550	143	93	8	M8	41,0	1,50	**PHF FX60-55X85**
	60	90	56	64,0	–	72,0	–	207,0	6 200	164	109	10	M8	41,0	1,60	**PHF FX60-60X90**
	65	95	56	64,0	–	72,0	–	207,0	6 750	152	104	10	M8	41,0	1,80	**PHF FX60-65X95**
	70	110	70	78,0	–	88,0	–	330,0	11 550	179	114	10	M10	83,0	3,00	**PHF FX60-70X110**
	75	115	70	78,0	–	88,0	–	330,0	12 350	167	109	10	M10	83,0	3,30	**PHF FX60-75X115**
	80	120	70	78,0	–	88,0	–	396,0	15 800	188	125	12	M10	83,0	3,50	**PHF FX60-80X120**
	85	125	70	78,0	–	88,0	–	396,0	16 800	177	120	12	M10	83,0	3,70	**PHF FX60-85X125**
	90	130	70	78,0	–	88,0	–	396,0	17 800	167	115	12	M10	83,0	3,80	**PHF FX60-90X130**
	95	135	70	78,0	–	88,0	–	396,0	18 800	158	111	12	M10	83,0	5,00	**PHF FX60-95X135**
	100	145	90	100,0	–	112,0	–	576,0	28 800	170	117	12	M12	145,0	6,00	**PHF FX60-100X145**
	110	155	90	100,0	–	112,0	–	576,0	31 700	155	110	12	M12	145,0	6,20	**PHF FX60-110X155**
	120	165	90	100,0	–	112,0	–	573,0	40 300	165	120	14	M12	145,0	7,20	**PHF FX60-120X165**
	130	180	104	116,0	–	130,0	–	791,0	51 400	155	112	12	M14	230,0	10,00	**PHF FX60-130X180**
	140	190	104	116,0	–	130,0	–	923,0	64 600	168	124	14	M14	230,0	10,20	**PHF FX60-140X190**
	150	200	104	116,0	–	130,0	–	1 055,0	79 100	179	135	16	M14	230,0	10,80	**PHF FX60-150X200**
	160	210	104	116,0	–	130,0	–	1 055,0	84 400	168	128	16	M14	230,0	11,50	**PHF FX60-160X210**
	170	225	134	146,0	–	162,0	–	1 283,0	109 000	149	113	14	M16	355,0	17,00	**PHF FX60-170X225**
	180	235	134	146,0	–	162,0	–	1 466,0	132 000	161	124	16	M16	355,0	18,50	**PHF FX60-180X235**
	190	250	134	146,0	–	162,0	–	1 466,0	139 000	153	116	16	M16	355,0	21,50	**PHF FX60-190X250**

Bushing no.	Dimensions							Transmissible axial force	Transmissible torque	Shaft surface pressure	Hub surface pressure	Clamp screws	Clamp screws size	Screw tightening torque	Mass	Designation
	d	D	L_1	L_2	L_3	B	D_1	F_t	M_t	P_w	P_n	Quantity		M_s		
–	mm							kN	Nm	N/mm²				Nm	kg	–
FX60	200	260	134	146,0	–	162,0	–	1 466,0	146 500	145	112	16	M16	355,0	22,00	**PHF FX60-200X260**
	220	285	134	146,0	–	162,0	–	1 833,0	201 500	165	127	20	M16	355,0	25,00	**PHF FX60-220X285**
	240	305	134	146,0	–	162,0	–	2 017,0	242 000	166	131	22	M16	355,0	27,00	**PHF FX60-240X305**
	260	325	134	146,0	–	162,0	–	2 017,0	262 000	154	123	22	M16	355,0	30,00	**PHF FX60-260X325**
	280	355	165	177,0	–	197,0	–	2 862,0	400 000	164	130	20	M20	690,0	46,00	**PHF FX60-280X355**
	300	375	165	177,0	–	197,0	–	3 148,0	472 000	169	135	22	M20	690,0	50,00	**PHF FX60-300X375**
	320	405	165	177,0	–	197,0	–	3 148,0	503 500	158	125	22	M20	690,0	60,00	**PHF FX60-320X405**
	340	425	165	177,0	–	197,0	–	3 434,0	583 500	162	130	24	M20	690,0	65,00	**PHF FX60-340X425**
	360	455	190	202,0	–	224,0	–	3 918,0	705 000	152	120	22	M22	930,0	89,00	**PHF FX60-360X455**
	380	475	190	202,0	–	224,0	–	4 631,0	880 000	170	136	26	M22	930,0	93,00	**PHF FX60-380X475**
	400	495	190	202,0	–	224,0	–	4 631,0	926 000	162	131	26	M22	930,0	98,00	**PHF FX60-400X495**

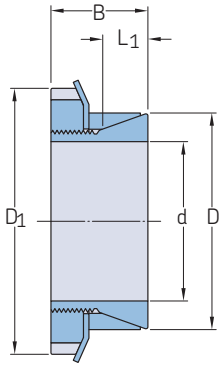

FX80

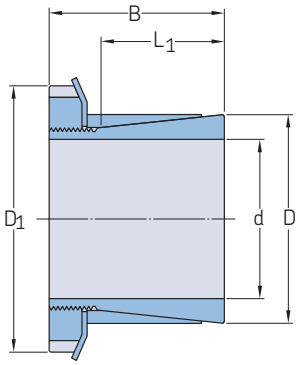

FX90

Bushing no.	Dimensions					Transmissible axial force	Transmissible torque	Shaft surface pressure	Hub surface pressure	Clamp screws size	Clamp screws nut	Screw tightening torque	Mass	Designation
	d	D	L_1	B	D_1	F_t	M_t	P_w	P_n			M_s		
–	mm					kN	Nm	N/mm²				Nm	kg	–
FX80	14	25	6,5	16,5	32	5,1	38	200	110	–	KM4	95,0	0,05	**PHF FX80-14X25**
	15	25	6,5	16,5	32	5,5	41	185	110	–	KM4	95,0	0,05	**PHF FX80-15X25**
	16	25	6,5	16,5	32	5,5	43	174	110	–	KM4	95,0	0,04	**PHF FX80-16X25**
	17	26	6,5	16,5	32	5,5	47	164	107	–	KM4	95,0	0,04	**PHF FX80-17X26**
	18	26	6,5	16,5	32	5,4	49	155	107	–	KM4	95,0	0,04	**PHF FX80-18X26**
	19	30	6,5	18,0	38	6,6	62	176	112	–	KM5	160,0	0,08	**PHF FX80-19X30**
	20	30	6,5	18,0	38	6,6	66	167	111	–	KM5	160,0	0,07	**PHF FX80-20X30**
	22	32	6,5	18,0	38	6,6	73	152	105	–	KM5	160,0	0,10	**PHF FX80-22X32**
	24	35	6,5	18,0	45	8,8	105	185	127	–	KM6	220,0	0,09	**PHF FX80-24X35**
	25	35	6,5	18,0	45	8,8	110	178	127	–	KM6	220,0	0,09	**PHF FX80-25X35**
	28	36	6,5	18,0	45	8,6	120	159	124	–	KM6	220,0	0,07	**PHF FX80-28X36**
	30	40	7,0	19,5	52	10,6	160	164	123	–	KM7	340,0	0,07	**PHF FX80-30X40**
	32	42	7,0	19,5	52	10,6	170	154	117	–	KM7	340,0	0,17	**PHF FX80-32X42**
	35	45	8,0	21,5	58	13,1	230	153	120	–	KM8	480,0	0,17	**PHF FX80-35X45**
	36	45	8,0	21,5	58	13,3	240	149	120	–	KM8	480,0	0,15	**PHF FX80-36X45**
	38	48	8,0	21,5	58	13,1	250	141	112	–	KM8	480,0	0,15	**PHF FX80-38X48**
	40	52	10,0	24,5	65	15,5	310	120	93	–	KM9	680,0	0,24	**PHF FX80-40X52**
	42	55	10,0	25,5	65	15,2	320	114	87	–	KM9	680,0	0,25	**PHF FX80-42X55**
	45	57	10,0	25,5	70	17,7	400	122	96	–	KM10	870,0	0,28	**PHF FX80-45X57**
	48	62	10,0	25,5	75	20,8	500	135	105	–	KM11	970,0	0,32	**PHF FX80-48X62**
	50	62	10,0	25,5	75	20,8	520	130	105	–	KM11	970,0	0,30	**PHF FX80-50X62**
	55	68	12,0	27,5	80	22,0	610	103	84	–	KM12	1 100,0	0,36	**PHF FX80-55X68**
	56	68	12,0	27,5	80	22,0	620	101	82	–	KM12	1 100,0	0,34	**PHF FX80-56X68**
	60	73	12,0	28,5	85	26,6	800	113	93	–	KM13	1 300,0	0,40	**PHF FX80-60X73**
	63	79	14,0	30,5	92	31,1	980	107	86	–	KM14	1 600,0	0,56	**PHF FX80-63X79**
	65	79	14,0	30,5	92	31,1	1 010	104	86	–	KM14	1 600,0	0,52	**PHF FX80-65X79**
	70	84	14,0	31,5	98	35,4	1 240	110	92	–	KM15	2 000,0	0,60	**PHF FX80-70X84**
FX90	14	25	20,0	30,0	32	9,0	64	85	45	KM4	–	95,0	0,08	**PHF FX90-14X25**
	15	25	20,0	30,0	32	9,0	70	80	45	KM4	–	95,0	0,08	**PHF FX90-15X25**
	16	25	20,0	30,0	32	9,0	73	75	45	KM4	–	95,0	0,07	**PHF FX90-16X25**
	17	25	20,0	32,0	32	9,0	80	70	45	KM4	–	160,0	0,07	**PHF FX90-17X25**
	18	30	20,0	32,0	38	9,0	83	65	40	KM4	–	160,0	0,12	**PHF FX90-18X30**
	19	30	20,0	32,0	38	11,0	105	75	45	KM5	–	160,0	0,12	**PHF FX90-19X30**
	20	30	20,0	32,0	38	11,0	112	70	45	KM5	–	160,0	0,11	**PHF FX90-20X30**
	22	35	25,0	36,0	45	14,0	163	70	45	KM6	–	220,0	0,18	**PHF FX90-22X35**
	24	35	25,0	36,0	45	14,0	178	65	45	KM6	–	220,0	0,16	**PHF FX90-24X35**
	25	35	25,0	36,0	45	14,0	185	60	45	KM6	–	220,0	0,15	**PHF FX90-25X35**
	28	40	30,0	42,0	52	17,0	250	55	40	KM7	–	340,0	0,24	**PHF FX90-28X40**
	30	40	30,0	42,0	52	17,0	270	50	40	KM7	–	340,0	0,21	**PHF FX90-30X40**
	32	45	30,0	44,0	58	21,0	350	60	45	KM8	–	480,0	0,32	**PHF FX90-32X45**
	35	45	30,0	44,0	58	21,0	390	55	45	KM8	–	480,0	0,26	**PHF FX90-35X45**
	38	50	30,0	45,0	65	26,0	500	60	45	KM9	–	680,0	0,35	**PHF FX90-38X50**
	40	50	30,0	45,0	65	26,0	520	55	45	KM9	–	680,0	0,33	**PHF FX90-40X50**
	42	55	30,0	46,0	70	30,0	680	60	50	KM10	–	870,0	0,43	**PHF FX90-42X55**
	45	55	30,0	46,0	70	30,0	680	60	50	KM10	–	870,0	0,39	**PHF FX90-45X55**
	48	60	30,0	46,0	75	35,0	840	60	50	KM11	–	970,0	0,45	**PHF FX90-48X60**
	50	60	30,0	46,0	75	35,0	880	60	50	KM11	–	970,0	0,40	**PHF FX90-50X60**
	55	65	30,0	46,0	80	37,0	1 030	60	50	KM12	–	1 100,0	0,44	**PHF FX90-55X65**
	60	70	30,0	52,0	85	45,0	1 360	65	55	KM13	–	1 300,0	0,55	**PHF FX90-60X70**

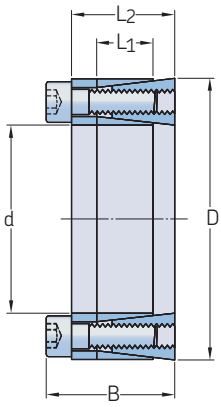

FX120

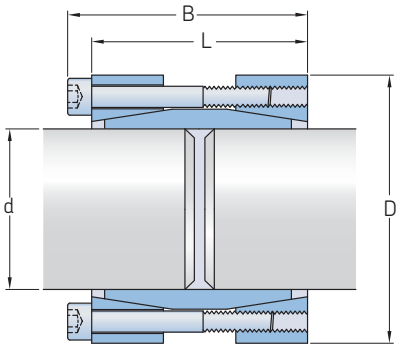

FX130 Standard version

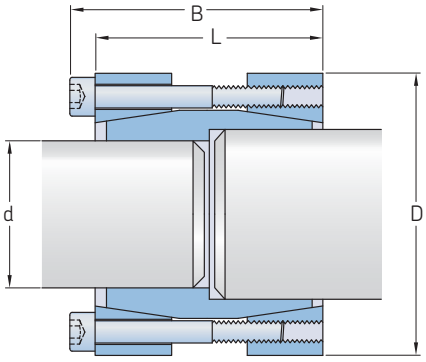

FX130 Double diameter version

Bushing no.	Dimensions						Transmissible axial force	Transmissible torque	Shaft surface pressure	Hub surface pressure	Clamp screws	Clamp screws size	Screw tightening torque	Mass	Designation
	d	D	L	L_1	L_2	B	F_t	M_t	P_w	P_n	Quantity		M_s		
–	mm						kN	Nm	N/mm²				Nm	kg	–
FX120	18	40	–	12,0	18,5	24,5	–	190	260	120	6	M6	16,0	–	**PHF FX120-18X40**
	19	41	–	12,0	18,5	24,5	–	210	260	120	6	M6	16,0	–	**PHF FX120-19X41**
	20	42	–	12,0	18,5	24,5	–	240	250	120	6	M6	16,0	–	**PHF FX120-20X42**
	24	46	–	12,0	18,5	24,5	–	290	250	120	6	M6	16,0	–	**PHF FX120-24X46**
	25	47	–	12,0	18,5	24,5	–	330	230	120	8	M6	16,0	–	**PHF FX120-25X47**
	28	50	–	12,0	18,5	24,5	–	370	220	120	8	M6	16,0	–	**PHF FX120-28X50**
	30	52	–	12,0	18,5	24,5	–	430	210	120	8	M6	16,0	–	**PHF FX120-30X52**
	35	57	–	15,0	22,0	28,0	–	610	170	100	12	M6	16,0	–	**PHF FX120-35X57**
	38	60	–	15,0	22,0	28,0	–	680	170	100	12	M6	16,0	–	**PHF FX120-38X60**
	40	62	–	15,0	22,0	28,0	–	780	170	100	12	M6	16,0	–	**PHF FX120-40X62**
	42	70	–	18,0	28,0	36,0	–	1 480	190	110	12	M8	41,0	–	**PHF FX120-42X70**
	45	73	–	18,0	28,0	36,0	–	1 500	210	130	12	M8	41,0	–	**PHF FX120-45X73**
	48	76	–	18,0	28,0	36,0	–	1 550	210	130	12	M8	41,0	–	**PHF FX120-48X76**
	50	78	–	18,0	28,0	36,0	–	1 650	190	120	12	M8	41,0	–	**PHF FX120-50X78**
	55	83	–	18,0	28,0	36,0	–	2 000	190	120	16	M8	41,0	–	**PHF FX120-55X83**
	60	88	–	18,0	28,0	36,0	–	2 350	190	120	16	M8	41,0	–	**PHF FX120-60X88**
	70	105	–	22,0	35,0	45,0	–	3 900	180	120	12	M10	70,0	–	**PHF FX120-70X105**
	80	115	–	22,0	35,0	45,0	–	4 800	170	120	16	M10	70,0	–	**PHF FX120-80X115**
FX130	17	50	50	–	–	56,0	24,5	210	–	–	4	M6	17,0	0,50	**PHF FX130-17X50**
	18	50	50	–	–	56,0	24,5	230	–	–	4	M6	17,0	0,50	**PHF FX130-18X50**
	19	50	50	–	–	56,0	24,5	240	–	–	4	M6	17,0	0,50	**PHF FX130-19X50**
	20	50	50	–	–	56,0	24,5	250	–	–	4	M6	17,0	0,50	**PHF FX130-20X50**
	22	55	60	–	–	66,0	24,5	270	–	–	4	M6	17,0	0,60	**PHF FX130-22X55**
	24	55	60	–	–	66,0	24,5	300	–	–	4	M6	17,0	0,60	**PHF FX130-24X55**
	25	55	60	–	–	66,0	36,5	460	–	–	6	M6	17,0	0,60	**PHF FX130-25X55**
	28	60	60	–	–	66,0	36,5	520	–	–	6	M6	17,0	0,70	**PHF FX130-28X60**
	30	60	60	–	–	66,0	36,5	560	–	–	6	M6	17,0	0,70	**PHF FX130-30X60**
	32	63	60	–	–	66,0	36,5	590	–	–	6	M6	17,0	0,70	**PHF FX130-32X63**
	35	75	75	–	–	83,0	45,5	770	–	–	4	M8	41,0	1,30	**PHF FX130-35X75**
	38	75	75	–	–	83,0	45,5	860	–	–	4	M8	41,0	1,30	**PHF FX130-38X75**
	40	75	75	–	–	83,0	45,5	910	–	–	4	M8	41,0	1,30	**PHF FX130-40X75**
	42	78	75	–	–	83,0	45,5	940	–	–	4	M8	41,0	2,00	**PHF FX130-42X78**
	45	85	85	–	–	93,0	67,5	1 530	–	–	6	M8	41,0	2,20	**PHF FX130-45X85**
	48	90	85	–	–	93,0	67,5	1 610	–	–	6	M8	41,0	2,40	**PHF FX130-48X90**
	50	90	85	–	–	93,0	67,5	1 700	–	–	6	M8	41,0	2,30	**PHF FX130-50X90**
	55	94	85	–	–	93,0	90,5	2 460	–	–	8	M8	41,0	2,90	**PHF FX130-55X94**
	60	100	85	–	–	93,0	90,5	2 720	–	–	8	M8	41,0	3,20	**PHF FX130-60X100**
	65	105	85	–	–	93,0	90,5	2 940	–	–	8	M8	41,0	3,00	**PHF FX130-65X105**
	70	115	100	–	–	110,0	107,5	3 780	–	–	6	M10	83,0	4,30	**PHF FX130-70X115**
	75	125	100	–	–	110,0	107,5	4 040	–	–	6	M10	83,0	5,00	**PHF FX130-75X125**
	80	125	100	–	–	110,0	107,5	4 300	–	–	6	M10	83,0	4,70	**PHF FX130-80X125**

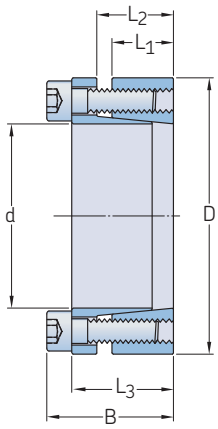

FX140

Bushing no.	Dimensions d	D	L_1	L_2	L_3	B	Transmissible axial force F_t	Transmissible torque M_t	Shaft surface pressure P_w	Hub surface pressure P_n	Clamp screws Quantity	Clamp screws size	Screw tightening torque M_s	Mass	Designation
–	mm						kN	Nm	N/mm²				Nm	kg	–
FX140	18	40	12,0	15,0	20,0	24,0	23,7	210	235	130	6	M4	5,0	0,20	**PHF FX140-18X40**
	19	41	12,0	15,0	20,0	24,0	23,7	220	220	128	6	M4	5,0	0,20	**PHF FX140-19X41**
	20	42	12,0	15,0	20,0	24,0	27,7	270	245	145	7	M4	5,0	0,20	**PHF FX140-20X42**
	22	44	12,0	15,0	20,0	24,0	27,7	300	225	140	7	M4	5,0	0,20	**PHF FX140-22X44**
	24	46	12,0	15,0	20,0	24,0	27,7	330	205	135	7	M4	5,0	0,20	**PHF FX140-24X46**
	25	47	12,0	15,0	20,0	24,0	27,7	340	195	130	7	M4	5,0	0,20	**PHF FX140-25X47**
	28	50	12,0	15,0	20,0	24,0	35,6	500	225	155	9	M4	5,0	0,20	**PHF FX140-28X50**
	30	52	12,0	15,0	20,0	24,0	35,6	530	210	151	9	M4	5,0	0,20	**PHF FX140-30X52**
	32	54	12,0	15,0	20,0	24,0	35,6	570	197	146	9	M4	5,0	0,20	**PHF FX140-32X54**
	35	57	16,0	19,0	24,0	28,0	39,5	690	158	115	10	M4	5,0	0,30	**PHF FX140-35X57**
	36	58	16,0	19,0	24,0	28,0	39,5	710	155	113	10	M4	5,0	0,30	**PHF FX140-36X58**
	38	60	16,0	19,0	24,0	28,0	43,5	830	160	120	11	M4	5,0	0,30	**PHF FX140-38X60**
	40	62	16,0	19,0	24,0	28,0	43,5	870	150	116	11	M4	5,0	0,40	**PHF FX140-40X62**
	42	70	19,0	23,0	30,0	36,0	73,0	1 530	200	146	8	M6	17,0	0,60	**PHF FX140-42X70**
	45	73	19,0	23,0	30,0	36,0	73,0	1 640	185	140	8	M6	17,0	0,60	**PHF FX140-45X73**
	48	76	19,0	23,0	30,0	36,0	73,0	1 750	175	134	8	M6	17,0	0,60	**PHF FX140-48X76**
	50	78	19,0	23,0	30,0	36,0	73,0	1 820	165	131	8	M6	17,0	0,60	**PHF FX140-50X78**
	55	83	19,0	23,0	30,0	36,0	73,0	2 000	150	123	8	M6	17,0	0,70	**PHF FX140-55X83**
	56	84	19,0	23,0	30,0	36,0	73,0	2 040	150	120	8	M6	17,0	0,70	**PHF FX140-56X84**
	60	88	19,0	23,0	30,0	36,0	82,1	2 460	158	130	9	M6	17,0	0,70	**PHF FX140-60X88**
	63	91	19,0	23,0	30,0	36,0	82,1	2 580	150	125	9	M6	17,0	0,90	**PHF FX140-63X91**
	65	93	19,0	23,0	30,0	36,0	82,1	2 660	140	120	9	M6	17,0	1,00	**PHF FX140-65X93**
	70	105	23,0	28,0	37,0	45,0	134,8	4 720	180	148	8	M8	41,0	1,50	**PHF FX140-70X105**
	75	110	23,0	28,0	37,0	45,0	134,8	5 050	170	140	8	M8	41,0	1,50	**PHF FX140-75X110**
	80	115	23,0	28,0	37,0	45,0	134,8	5 390	160	135	8	M8	41,0	1,70	**PHF FX140-80X115**
	85	120	23,0	28,0	37,0	45,0	134,8	5 730	150	130	8	M8	41,0	2,00	**PHF FX140-85X120**
	90	125	23,0	28,0	37,0	45,0	168,5	7 580	156	156	10	M8	41,0	2,30	**PHF FX140-90X125**

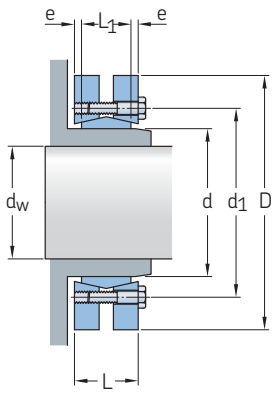

FX190

Bushing no.	Dimensions							Transmissible axial force	Transmissible torque	Clamp screws	Clamp screws size	Screw tightening torque	Mass	Designation
	d	D	d_w	L	L_1	d_1	e	F_t	M_t	Quantity		M_s		
–	mm							kN	Nm			Nm	kg	–
FX190	14	38	11	11,0	7,0	23,0	2,00	6,00	30	4	M5*	4,0	0,10	**PHF FX190-14X38**
	16	41	13	15,0	11,0	26,0	2,00	10,00	70	5	M5*	4,0	0,10	**PHF FX190-16X41**
	24	50	19	19,5	14,0	36,0	2,75	25,00	170	6	M5*	4,0	0,20	**PHF FX190-24X50**
	30	60	24	21,5	16,0	44,0	2,75	29,00	300	7	M5*	4,0	0,30	**PHF FX190-30X60**
	36	72	28	23,5	18,0	52,0	2,75	50,00	440	5	M6	12,0	0,40	**PHF FX190-36X72**
	44	80	32	25,5	20,0	61,0	2,75	64,00	620	7	M6	12,0	0,60	**PHF FX190-44X80**
	50	90	38	27,5	22,0	70,0	2,75	79,00	940	8	M6	12,0	0,80	**PHF FX190-50X90**
	55	100	42	30,5	23,0	75,0	3,75	79,00	1 160	8	M6	12,0	1,10	**PHF FX190-55X100**
	62	110	48	30,5	23,0	86,0	3,75	100,00	1 850	10	M6	12,0	1,30	**PHF FX190-62X110**
	68	115	50	30,5	23,0	86,0	3,75	97,00	2 000	10	M6	12,0	1,40	**PHF FX190-68X115**
	75	138	55	32,5	25,0	100,0	3,75	119,00	2 500	7	M8	30,0	1,70	**PHF FX190-75X138**
	80	145	60	32,5	25,0	100,0	3,75	124,00	3 200	7	M8	30,0	1,90	**PHF FX190-80X145**
	85	155	65	39,0	30,0	114,0	4,50	175,00	4 800	10	M8	30,0	3,50	**PHF FX190-85X155**
	90	155	65	39,0	30,0	114,0	4,50	170,00	4 750	10	M8	30,0	3,30	**PHF FX190-90X155**
	100	170	70	44,0	34,0	124,0	5,00	195,00	6 900	12	M8	30,0	4,70	**PHF FX190-100X170**
	110	185	75	50,0	39,0	136,0	5,50	229,00	7 200	9	M10	59,0	5,90	**PHF FX190-110X185**
	115	188	80	50,0	39,0	141,0	5,50	235,00	7 400	9	M10	59,0	5,50	**PHF FX190-115X188**
	120	215	80	54,0	42,0	160,0	6,00	285,00	10 600	12	M10	59,0	9,00	**PHF FX190-120X215**
	125	215	85	54,0	42,0	160,0	6,00	296,00	11 000	12	M10	59,0	8,30	**PHF FX190-125X215**
	130	215	90	54,0	42,0	160,0	6,00	304,00	11 300	12	M10	59,0	8,00	**PHF FX190-130X215**
	140	230	95	60,5	46,0	175,0	7,25	367,00	15 100	10	M12	100,0	10,00	**PHF FX190-140X230**
	155	265	105	64,5	50,0	192,0	7,25	447,00	22 000	12	M12	100,0	15,00	**PHF FX190-155X265**
	160	265	110	64,5	50,0	192,0	7,25	460,00	22 600	12	M12	100,0	14,50	**PHF FX190-160X265**
	165	290	115	71,0	56,0	210,0	7,50	595,00	31 000	8	M16	250,0	22,00	**PHF FX190-165X290**
	170	290	120	71,0	56,0	210,0	7,50	610,00	31 900	8	M16	250,0	21,00	**PHF FX190-170X290**
	175	300	125	71,0	56,0	220,0	7,50	605,00	36 000	8	M16	250,0	22,00	**PHF FX190-175X300**
	180	330	130	86,0	71,0	236,0	7,50	778,00	52 000	8	M16	250,0	21,00	**PHF FX190-180X330**
	185	330	135	86,0	71,0	236,0	7,50	778,00	52 000	10	M24	250,0	37,00	**PHF FX190-185X330**
	190	330	140	86,0	71,0	236,0	7,50	800,00	63 500	10	M16	250,0	36,00	**PHF FX190-190X330**
	195	350	140	86,0	71,0	246,0	7,50	933,00	65 000	12	M16	250,0	41,00	**PHF FX190-195X350**
	200	350	150	86,0	71,0	246,0	7,50	990,00	74 000	12	M16	250,0	41,00	**PHF FX190-200X350**
	220	370	160	104,0	88,0	270,0	8,00	1 190,00	95 000	15	M16	250,0	54,00	**PHF FX190-220X370**
	240	405	170	109,0	92,0	295,0	8,50	1 464,00	120 000	12	M20	490,0	67,00	**PHF FX190-240X405**
	260	430	190	120,0	103,0	321,0	8,50	1 760,00	164 000	14	M20	490,0	82,00	**PHF FX190-260X430**
	280	460	210	134,0	114,0	346,0	10,00	2 090,00	217 000	16	M20	490,0	102,00	**PHF FX190-280X460**
	300	485	230	142,0	122,0	364,0	10,00	2 431,00	275 000	18	M20	490,0	118,00	**PHF FX190-300X485**
	320	520	240	142,0	122,0	386,0	10,00	2 647,00	312 000	20	M20	490,0	131,00	**PHF FX190-320X520**
	340	570	250	156,0	134,0	408,0	11,00	3 119,00	390 000	24	M20	490,0	186,00	**PHF FX190-340X570**
	350	580	270	162,0	140,0	432,0	11,00	3 276,00	442 000	24	M20	490,0	195,00	**PHF FX190-350X580**
	360	590	280	162,0	140,0	432,0	11,00	3 310,00	463 000	24	M20	490,0	204,00	**PHF FX190-360X590**
	380	645	290	168,0	144,0	458,0	12,00	3 910,00	567 000	20	M24	840,0	239,00	**PHF FX190-380X645**
	390	660	300	168,0	144,0	468,0	12,00	4 160,00	624 000	21	M24	840,0	260,00	**PHF FX190-390X660**
	400	680	315	168,0	144,0	480,0	12,00	4 260,00	670 000	21	M24	840,0	280,00	**PHF FX190-400X680**
	420	690	330	188,0	164,0	504,0	12,00	4 850,00	780 000	24	M24	840,0	316,00	**PHF FX190-420X690**
	440	750	340	202,0	177,0	527,0	12,50	4 740,00	806 000	24	M24	840,0	408,00	**PHF FX190-440X750**
	460	770	360	202,0	177,0	547,0	12,50	5 670,00	1 000 000	28	M24	840,0	420,00	**PHF FX190-460X770**
	480	800	380	213,0	188,0	570,0	12,50	6 150,00	1 170 000	30	M24	840,0	505,00	**PHF FX190-480X800**

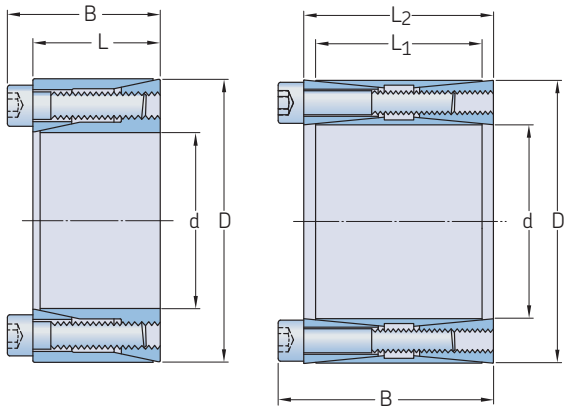

FX350 FX400

Bushing no.	Dimensions d	D	L	L_1	L_2	B	Transmissible axial force F_t	Transmissible torque M_t	Shaft surface pressure P_w	Hub surface pressure P_n	Clamp screws Quantity	Clamp screws size	Screw tightening torque	Mass	Designation
–	mm						kN	Nm	N/mm²				Nm	kg	–
FX350	10	20	13	–	–	15,5	–	15	110	55	4	M2.5	1,2	0,02	**PHF FX350-10X20**
	12	22	13	–	–	15,5	–	20	90	50	4	M2.5	1,2	0,02	**PHF FX350-12X22**
	14	26	17	–	–	20,0	–	35	105	55	4	M3	2,1	0,04	**PHF FX350-14X26**
	15	28	17	–	–	20,0	–	40	100	50	4	M3	2,1	0,04	**PHF FX350-15X28**
	16	32	17	–	–	21,0	–	70	130	65	4	M4	4,9	0,07	**PHF FX350-16X32**
	18	35	21	–	–	25,0	–	80	115	60	4	M4	4,9	0,09	**PHF FX350-18X35**
	19	35	21	–	–	25,0	–	85	110	60	4	M4	4,9	0,08	**PHF FX350-19X35**
	20	38	21	–	–	26,0	–	220	220	115	6	M5	10,0	0,10	**PHF FX350-20X38**
	22	40	21	–	–	26,0	–	240	200	110	6	M5	10,0	0,11	**PHF FX350-22X40**
	24	47	26	–	–	32,0	–	380	220	110	6	M6	17,0	0,19	**PHF FX350-24X47**
	25	47	26	–	–	32,0	–	390	210	110	6	M6	17,0	0,19	**PHF FX350-25X47**
FX400	45	75	–	56,0	64,0	72,0	155	3 460	165	100	8	M8	41,0	1,30	**PHF FX400-45X75**
	48	80	–	56,0	64,0	72,0	155	3 680	150	95	8	M8	41,0	1,50	**PHF FX400-48X80**
	50	80	–	56,0	64,0	72,0	155	3 820	147	95	8	M8	41,0	1,40	**PHF FX400-50X80**
	55	85	–	56,0	64,0	72,0	155	4 260	135	85	8	M8	41,0	1,50	**PHF FX400-55X85**
	60	90	–	56,0	64,0	72,0	190	5 820	155	100	10	M8	41,0	1,50	**PHF FX400-60X90**
	65	95	–	56,0	64,0	72,0	190	6 270	140	95	10	M8	41,0	1,60	**PHF FX400-65X95**
	70	110	–	70,0	78,0	88,0	305	10 730	170	105	10	M10	83,0	3,00	**PHF FX400-70X110**
	75	115	–	70,0	78,0	88,0	305	11 540	155	100	10	M10	83,0	3,10	**PHF FX400-75X115**
	80	120	–	70,0	78,0	88,0	369	14 700	175	115	12	M10	83,0	3,50	**PHF FX400-80X120**
	85	125	–	70,0	78,0	88,0	369	15 700	165	110	12	M10	83,0	3,50	**PHF FX400-85X125**
	90	130	–	70,0	78,0	88,0	370	16 610	157	106	12	M10	83,0	3,80	**PHF FX400-90X130**
	95	135	–	70,0	78,0	88,0	370	17 530	150	102	12	M10	83,0	4,00	**PHF FX400-95X135**
	100	145	–	90,0	100,0	112,0	538	26 900	160	110	12	M12	145,0	6,00	**PHF FX400-100X145**
	110	155	–	90,0	100,0	112,0	538	29 530	143	102	12	M12	145,0	6,20	**PHF FX400-110X155**
	120	165	–	90,0	100,0	112,0	628	37 610	154	112	14	M12	145,0	6,80	**PHF FX400-120X165**
	130	180	–	104,0	116,0	130,0	738	48 000	143	106	12	M14	230,0	9,80	**PHF FX400-130X180**
	140	190	–	104,0	116,0	130,0	861	60 290	160	117	14	M14	230,0	10,20	**PHF FX400-140X190**
	150	200	–	104,0	116,0	130,0	985	73 800	165	125	16	M14	230,0	10,90	**PHF FX400-150X200**
	160	210	–	104,0	116,0	130,0	983	78 770	155	118	16	M14	230,0	11,50	**PHF FX400-160X210**
	170	225	–	134,0	146,0	162,0	1197	101 730	140	108	14	M16	355,0	17,20	**PHF FX400-170X225**
	180	235	–	134,0	146,0	162,0	1369	123 200	150	115	16	M16	355,0	18,00	**PHF FX400-180X235**
	190	250	–	134,0	146,0	162,0	1368	129 880	141	110	16	M16	355,0	21,50	**PHF FX400-190X250**
	200	260	–	134,0	146,0	162,0	1368	136 840	137	104	16	M16	355,0	22,00	**PHF FX400-200X260**
	220	285	–	134,0	146,0	162,0	1710	188 000	155	120	20	M16	355,0	25,00	**PHF FX400-220X285**
	240	305	–	134,0	146,0	162,0	1880	225 000	155	120	22	M16	355,0	27,00	**PHF FX400-240X305**
	260	325	–	134,0	146,0	162,0	1880	244 000	155	115	22	M16	355,0	30,00	**PHF FX400-260X325**
	280	355	–	165,0	177,0	197,0	2670	373 000	145	120	20	M20	690,0	46,00	**PHF FX400-280X355**
	300	375	–	165,0	177,0	197,0	2930	440 000	155	125	22	M20	690,0	50,00	**PHF FX400-300X375**
	320	405	–	165,0	177,0	197,0	2930	470 000	145	115	22	M20	690,0	60,00	**PHF FX400-320X405**
	340	425	–	165,0	177,0	197,0	3200	544 000	150	120	24	M20	690,0	65,00	**PHF FX400-340X425**
	360	455	–	190,0	202,0	224,0	3650	658 000	140	110	22	M22	930,0	89,00	**PHF FX400-360X455**
	380	475	–	190,0	202,0	224,0	4320	821 000	160	130	26	M22	930,0	93,00	**PHF FX400-380X475**
	400	495	–	190,0	202,0	224,0	4320	864 000	150	120	26	M22	930,0	98,00	**PHF FX400-400X495**

Page intentionally left blank

SKF

Sprockets

Metric sprockets, simplex, pilot bore 164

Metric sprockets, simplex, taper bushed 174

Metric sprockets, double simplex, pilot bore 180

Metric sprockets, double simplex, taper bushed 182

Metric sprockets, duplex, standard 184

Metric sprockets, duplex, taper bushed 189

Metric sprockets, triplex, standard. 192

Metric sprockets, triplex, taper bushed 196

ANSI sprockets, simplex, pilot bore 197

ANSI sprockets, simplex, taper bushed 220

ANSI sprockets, double simplex, pilot bore 224

ANSI sprockets, double simplex, taper bushed 226

ANSI sprockets, duplex, pilot bore . 227

ANSI sprockets, duplex, taper bushed 232

ANSI sprockets, triplex, pilot bore . 234

SKF Sprockets

SKF sprocket range nomenclature has a defined prefix of PHS. All sprockets are made to be applied to standardized chains. SKF sprockets conform to conventional basic chain part number format – ISO, BS, or DIN.

Sprockets

The sprocket range designation from SKF has the following is an example to indicate set up.

SKF Designation prefix — PHS 80-1 TBH 22

Chain size and type
Example:
80-1 – ANSI series chain, simplex type
16B-3 – ISO/BS series chain, triplex type

Supplementary
Many different supplementary designations, examples
TBH- taper bushing type and hardened teeth
C – Hub type C
SS – stainless steel material

Note
See SKF product training for full supplementary notations

Teeth
The number of teeth on the sprocket

Supplementary
Possible other options and special requirements

Sprockets (PHS Product Group)

All SKF sprockets are manufactured according to ISO606 & ASME B29.100 standard. The sprockets are made from steel material C-45 and premium carbon steel no. 20 on hub material if welded. For some special sprockets gray cast iron HT250 or cast iron 250 material is used.

Sprockets 25T and below are hardened as standard (typically 35-40 HRC). This is only valid for sprocket teeths manufactured with steel material C-45. Surface treatment such as black oxide and zinc plating can be offered upon request.

Tolerances are machined according to DIN 8196.

All sprockets are completely deburred and protected with rustproof oil.

Metric sprockets, simplex, pilot bore

ISO 05B-1 · 8 mm pitch

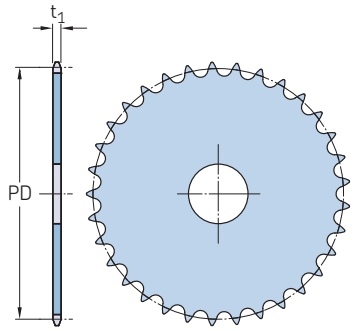

Type A

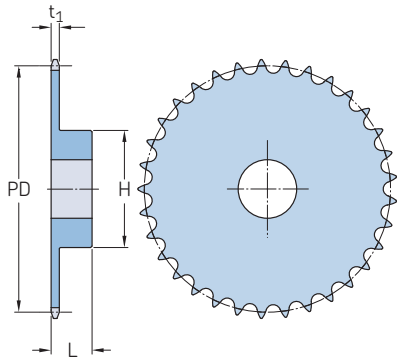

Type B

Pitch	Number of teeth	Pitch diameter	Type	Dimensions						Mass	Designation
				Bore stock	Bore		Hub		Plate thickness		
		PD			Min.	Max.	H	L	t_1		
mm	–	mm	–	mm						kg	–
8	8	20,90	A	6	–	–	–	–	–	0,01	**PHS 05B-1A8**
			B	–	6	6	13	12	2,80	0,02	**PHS 05B-1BH8**
	9	23,39	A	6	–	–	–	–	–	0,01	**PHS 05B-1A9**
			B	–	6	6	15	12	2,80	0,02	**PHS 05B-1BH9**
	10	25,89	A	8	–	–	–	–	–	0,01	**PHS 05B-1A10**
			B	–	8	8	17	12	2,80	0,02	**PHS 05B-1BH10**
	11	28,39	A	8	–	–	–	–	–	0,01	**PHS 05B-1A11**
			B	–	8	8	18	13	2,80	0,03	**PHS 05B-1BH11**
	12	30,91	A	8	–	–	–	–	–	0,01	**PHS 05B-1A12**
			B	–	8	8	20	13	2,80	0,03	**PHS 05B-1BH12**
	13	33,42	A	8	–	–	–	–	–	0,01	**PHS 05B-1A13**
			B	–	8	8	23	13	2,80	0,05	**PHS 05B-1BH13**
	14	35,95	A	8	–	–	–	–	–	0,02	**PHS 05B-1A14**
			B	–	8	10	25	13	2,80	0,05	**PHS 05B-1BH14**
	15	38,48	A	8	–	–	–	–	–	0,02	**PHS 05B-1A15**
			B	–	8	12	28	13	2,80	0,07	**PHS 05B-1BH15**
	16	41,01	A	8	–	–	–	–	–	0,02	**PHS 05B-1A16**
			B	–	8	14	30	14	2,80	0,08	**PHS 05B-1BH16**
	17	43,53	A	8	–	–	–	–	–	0,03	**PHS 05B-1A17**
			B	–	8	14	30	14	2,80	0,09	**PHS 05B-1BH17**
	18	46,07	A	8	–	–	–	–	–	0,03	**PHS 05B-1A18**
			B	–	8	14	30	14	2,80	0,09	**PHS 05B-1BH18**
	19	48,61	A	8	–	–	–	–	–	0,03	**PHS 05B-1A19**
			B	–	8	14	30	14	2,80	0,10	**PHS 05B-1BH19**
	20	51,14	A	8	–	–	–	–	–	0,04	**PHS 05B-1A20**
			B	–	8	14	30	14	2,80	0,10	**PHS 05B-1BH20**
	21	53,67	A	8	–	–	–	–	–	0,04	**PHS 05B-1A21**
			B	–	8	19	35	14	2,80	0,13	**PHS 05B-1BH21**
	22	56,21	A	8	–	–	–	–	–	0,05	**PHS 05B-1A22**
			B	–	8	19	35	14	2,80	0,13	**PHS 05B-1BH22**
	23	58,75	A	8	–	–	–	–	–	0,05	**PHS 05B-1A23**
			B	–	8	19	35	14	2,80	0,13	**PHS 05B-1BH23**
	24	61,29	A	8	–	–	–	–	–	0,06	**PHS 05B-1A24**
			B	–	8	19	35	14	2,80	0,15	**PHS 05B-1BH24**
	25	63,83	A	8	–	–	–	–	–	0,06	**PHS 05B-1A25**
			B	–	8	19	35	14	2,80	0,15	**PHS 05B-1BH25**
	26	66,37	A	10	–	–	–	–	–	0,07	**PHS 05B-1A26**
			B	–	10	23	40	16	2,80	0,17	**PHS 05B-1B26**
	27	68,91	A	10	–	–	–	–	–	0,07	**PHS 05B-1A27**
			B	–	10	23	40	16	2,80	0,19	**PHS 05B-1B27**
	28	71,45	A	10	–	–	–	–	–	0,08	**PHS 05B-1A28**
			B	–	10	23	40	16	2,80	0,20	**PHS 05B-1B28**
	29	73,99	A	10	–	–	–	–	–	0,08	**PHS 05B-1A29**
			B	–	10	23	40	16	2,80	0,21	**PHS 05B-1B29**

Pitch	Number of teeth	Pitch diameter	Type	Dimensions						Mass	Designation
				Bore stock	Bore		Hub		Plate thickness		
		PD			Min.	Max.	H	L	t_1		
mm	–	mm	–	mm						kg	–
8	30	76,53	A	10	–	–	–	–	–	0,09	**PHS 05B-1A30**
			B	–	10	23	40	16	2,80	0,22	**PHS 05B-1B30**
	31	79,08	A	10	–	–	–	–	–	0,10	**PHS 05B-1A31**
			B	–	10	23	40	16	2,80	0,23	**PHS 05B-1B31**
	32	81,61	A	10	–	–	–	–	–	0,11	**PHS 05B-1A32**
			B	–	10	23	40	16	2,80	0,23	**PHS 05B-1B32**
	33	84,16	A	10	–	–	–	–	–	0,12	**PHS 05B-1A33**
			B	–	10	23	40	16	2,80	0,24	**PHS 05B-1B33**
	34	86,70	A	10	–	–	–	–	–	0,12	**PHS 05B-1A34**
			B	–	10	23	40	16	2,80	0,25	**PHS 05B-1B34**
	35	89,24	A	10	–	–	–	–	–	0,12	**PHS 05B-1A35**
			B	–	10	23	40	16	2,80	0,25	**PHS 05B-1B35**
	36	91,79	A	10	–	–	–	–	–	0,13	**PHS 05B-1A36**
			B	–	10	23	40	16	2,80	0,26	**PHS 05B-1B36**
	37	94,33	A	10	–	–	–	–	–	0,14	**PHS 05B-1A37**
			B	–	10	23	40	16	2,80	0,26	**PHS 05B-1B37**
	38	96,88	A	10	–	–	–	–	–	0,15	**PHS 05B-1A38**
			B	–	10	23	40	16	2,80	0,27	**PHS 05B-1B38**
	39	99,42	A	10	–	–	–	–	–	0,16	**PHS 05B-1A39**
			B	–	10	23	40	16	2,80	0,28	**PHS 05B-1B39**
	40	101,97	A	10	–	–	–	–	–	0,16	**PHS 05B-1A40**
			B	–	10	23	40	16	2,80	0,28	**PHS 05B-1B40**
	41	104,51	A	12	–	–	–	–	–	0,17	**PHS 05B-1A41**
			B	–	10	23	60	20	2,80	0,29	**PHS 05B-1B41**
	42	107,05	A	12	–	–	–	–	–	0,18	**PHS 05B-1A42**
			B	–	10	23	60	20	2,80	0,30	**PHS 05B-1B42**
	43	109,60	A	12	–	–	–	–	–	0,19	**PHS 05B-1A43**
			B	–	10	23	60	20	2,80	0,30	**PHS 05B-1B43**
	44	112,14	A	12	–	–	–	–	–	0,20	**PHS 05B-1A44**
			B	–	10	23	60	20	2,80	0,31	**PHS 05B-1B44**
	45	114,69	A	12	–	–	–	–	–	0,21	**PHS 05B-1A45**
			B	–	12	40	60	20	2,80	0,31	**PHS 05B-1B45**
	46	117,23	A	12	–	–	–	–	–	0,21	**PHS 05B-1A46**
			B	–	12	40	60	20	2,80	0,32	**PHS 05B-1B46**
	47	119,77	A	12	–	–	–	–	–	0,32	**PHS 05B-1A47**
			B	–	12	40	60	20	2,80	0,33	**PHS 05B-1B47**
	48	122,32	A	12	–	–	–	–	–	0,34	**PHS 05B-1A48**
			B	–	12	40	60	20	2,80	0,33	**PHS 05B-1B48**
	54	137,59	A	14	–	–	–	–	–	0,67	**PHS 05B-1A54**
			B	–	12	40	80	20	2,80	0,37	**PHS 05B-1B54**
	57	145,22	A	14	–	–	–	–	–	1,47	**PHS 05B-1A57**
			B	–	14	55	80	20	2,80	0,39	**PHS 05B-1B57**
	60	152,85	A	14	–	–	–	–	–	1,53	**PHS 05B-1A60**
			B	–	14	55	80	34	2,80	0,41	**PHS 05B-1B60**

Maximum bores can accommodate standard keyways. Larger bores are available where a shallow keyway is used or no keyway is required.
All Type B or C sprockets, up to and including 25 tooth, are with hardened teeth as standard.
For any additional size sprockets with hardened teeth, add "H" before the number of teeth, e.g. PHS 08B-1AH8.

Metric sprockets, simplex, pilot bore

ISO 05B-1 · 8 mm pitch | ISO 06B-1 · 9,525 mm pitch

Pitch	Number of teeth	Pitch diameter	Type	Dimensions						Mass	Designation
				Bore stock	Bore		Hub		Plate thickness		
		PD			Min.	Max.	H	L	t_1		
mm	–	mm	–	mm						kg	–
8	64	163,04	A	16	–	–	–	–	–	1,62	**PHS 05B-1A64**
			B	–	14	55	80	34	2,80	0,43	**PHS 05B-1B64**
	70	178,31	A	16	–	–	–	–	–	1,74	**PHS 05B-1A70**
			B	–	14	55	80	34	2,80	0,47	**PHS 05B-1B70**
	72	183,41	A	20	–	–	–	–	–	1,79	**PHS 05B-1A72**
			B	–	14	55	80	34	2,80	0,48	**PHS 05B-1B72**
	76	193,59	A	20	–	–	–	–	–	1,87	**PHS 05B-1A76**
			B	–	20	55	80	34	2,80	0,51	**PHS 05B-1B76**
	80	203,77	A	20	–	–	–	–	–	1,95	**PHS 05B-1A80**
			B	–	20	55	80	34	2,80	0,53	**PHS 05B-1B80**
	84	213,95	A	20	–	–	–	–	–	2,04	**PHS 05B-1A84**
			B	–	20	55	80	34	2,80	0,56	**PHS 05B-1B84**
	90	229,23	A	20	–	–	–	–	–	2,16	**PHS 05B-1A90**
			B	–	20	55	80	34	2,80	0,60	**PHS 05B-1B90**
	95	241,96	A	20	–	–	–	–	–	2,27	**PHS 05B-1A95**
			B	–	20	55	80	34	2,80	0,63	**PHS 05B-1B95**
	96	244,50	A	20	–	–	–	–	–	2,29	**PHS 05B-1A96**
			B	–	20	55	80	34	2,80	0,63	**PHS 05B-1B96**
	114	290,33	A	20	–	–	–	–	–	2,67	**PHS 05B-1A114**
			B	–	20	55	88	39	2,80	0,75	**PHS 05B-1B114**
9,525	8	24,89	A	6	–	–	–	–	–	0,02	**PHS 06B-1A8**
			B	–	6	6	15+	20	5,31	0,03	**PHS 06B-1BH8**
	9	27,85	A	8	–	–	–	–	–	0,02	**PHS 06B-1A9**
			B	–	8	8	18+	20	5,31	0,04	**PHS 06B-1BH9**
	10	30,82	A	8	–	–	–	–	–	0,02	**PHS 06B-1A10**
			B	–	8	8	20	20	5,31	0,06	**PHS 06B-1BH10**
	11	33,80	A	8	–	–	–	–	–	0,03	**PHS 06B-1A11**
			B	–	8	8	22	25	5,31	0,08	**PHS 06B-1BH11**
	12	36,80	A	8	–	–	–	–	–	0,04	**PHS 06B-1A12**
			B	–	8	10	25	25	5,31	0,10	**PHS 06B-1BH12**
	13	39,79	A	8	–	–	–	–	–	0,05	**PHS 06B-1A13**
			B	–	10	12	28	25	5,31	0,12	**PHS 06B-1BH13**
	14	42,80	A	8	–	–	–	–	–	0,05	**PHS 06B-1A14**
			B	–	10	15	31	25	5,31	0,15	**PHS 06B-1BH14**
	15	45,81	A	8	–	–	–	–	–	0,06	**PHS 06B-1A15**
			B	–	10	18	34	25	5,31	0,19	**PHS 06B-1BH15**
	16	48,82	A	10	–	–	–	–	–	0,07	**PHS 06B-1A16**
			B	–	10	20	37	28	5,31	0,24	**PHS 06B-1BH16**
	17	51,83	A	10	–	–	–	–	–	0,07	**PHS 06B-1A17**
			B	–	10	23	40	28	5,31	0,29	**PHS 06B-1BH17**
	18	54,85	A	10	–	–	–	–	–	0,08	**PHS 06B-1A18**
			B	–	10	26	43	28	5,31	0,33	**PHS 06B-1BH18**
	19	57,87	A	10	–	–	–	–	–	0,09	**PHS 06B-1A19**
			B	–	10	28	45	28	5,31	0,37	**PHS 06B-1BH19**
	20	60,89	A	10	–	–	–	–	–	0,10	**PHS 06B-1A20**
			B	–	10	28	46	28	5,31	0,39	**PHS 06B-1BH20**
	21	63,91	A	10	–	–	–	–	–	0,11	**PHS 06B-1A21**
			B	–	12	30	48	28	5,31	0,42	**PHS 06B-1BH21**
	22	66,93	A	10	–	–	–	–	–	0,13	**PHS 06B-1A22**
			B	–	12	35	50	28	5,31	0,46	**PHS 06B-1BH22**
	23	69,95	A	10	–	–	–	–	–	0,14	**PHS 06B-1A23**
			B	–	12	35	52	28	5,31	0,50	**PHS 06B-1BH23**
	24	72,97	A	10	–	–	–	–	–	0,15	**PHS 06B-1A24**
			B	–	12	35	54	28	5,31	0,54	**PHS 06B-1BH24**
	25	76,00	A	10	–	–	–	–	–	0,17	**PHS 06B-1A25**
			B	–	12	40	57	28	5,31	0,60	**PHS 06B-1BH25**
	26	79,02	A	10	–	–	–	–	–	0,18	**PHS 06B-1A26**
			B	–	12	40	60	28	5,31	0,67	**PHS 06B-1B26**
	27	82,05	A	10	–	–	–	–	–	0,19	**PHS 06B-1A27**
			B	–	12	40	60	28	5,31	0,68	**PHS 06B-1B27**

Pitch	Number of teeth	Pitch diameter	Type	Dimensions						Mass	Designation
				Bore stock	Bore		Hub		Plate thickness		
		PD			Min.	Max.	H	L	t_1		
mm	–	mm	–	mm						kg	–
9,525	28	85,07	A	10	–	–	–	–	–	0,21	**PHS 06B-1A28**
			B	–	12	40	60	28	5,31	0,70	**PHS 06B-1B28**
	29	88,09	A	10	–	–	–	–	–	0,23	**PHS 06B-1A29**
			B	–	12	40	60	28	5,31	0,72	**PHS 06B-1B29**
	30	91,12	A	10	–	–	–	–	–	0,25	**PHS 06B-1A30**
			B	–	12	40	60	28	5,31	0,77	**PHS 06B-1B30**
	31	94,15	A	12	–	–	–	–	–	0,26	**PHS 06B-1A31**
			B	–	14	43	65	30	5,31	0,88	**PHS 06B-1B31**
	32	97,17	A	12	–	–	–	–	–	0,28	**PHS 06B-1A32**
			B	–	14	43	65	30	5,31	0,90	**PHS 06B-1B32**
	33	100,20	A	12	–	–	–	–	–	0,30	**PHS 06B-1A33**
			B	–	14	43	65	30	5,31	0,91	**PHS 06B-1B33**
	34	103,23	A	12	–	–	–	–	–	0,32	**PHS 06B-1A34**
			B	–	14	43	65	30	5,31	0,94	**PHS 06B-1B34**
	35	106,26	A	12	–	–	–	–	–	0,34	**PHS 06B-1A35**
			B	–	14	43	65	30	5,31	0,95	**PHS 06B-1B35**
	36	109,29	A	12	–	–	–	–	–	0,35	**PHS 06B-1A36**
			B	–	14	48	70	30	5,31	1,07	**PHS 06B-1B36**
	37	112,32	A	12	–	–	–	–	–	0,38	**PHS 06B-1A37**
			B	–	14	48	70	30	5,31	1,09	**PHS 06B-1B37**
	38	115,35	A	12	–	–	–	–	–	0,39	**PHS 06B-1A38**
			B	–	14	48	70	30	5,31	1,10	**PHS 06B-1B38**
	39	118,37	A	12	–	–	–	–	–	0,42	**PHS 06B-1A39**
			B	–	14	48	70	30	5,31	1,12	**PHS 06B-1B39**
	40	121,40	A	12	–	–	–	–	–	0,44	**PHS 06B-1A40**
			B	–	14	48	70	30	5,31	1,16	**PHS 06B-1B40**
	41	124,43	A	16	–	–	–	–	–	0,46	**PHS 06B-1A41**
			B	–	14	48	78	32	5,31	1,28	**PHS 06B-1B41**
	42	127,46	A	16	–	–	–	–	–	0,48	**PHS 06B-1A42**
			B	–	14	48	78	32	5,31	1,36	**PHS 06B-1B42**
	43	130,49	A	16	–	–	–	–	–	0,51	**PHS 06B-1A43**
			B	–	14	48	78	32	5,31	1,44	**PHS 06B-1B43**
	44	133,52	A	16	–	–	–	–	–	0,54	**PHS 06B-1A44**
			B	–	14	48	78	32	5,31	1,52	**PHS 06B-1B44**
	45	136,55	A	16	–	–	–	–	–	0,56	**PHS 06B-1A45**
			B	–	14	40	78	32	5,31	1,40	**PHS 06B-1B45**
	46	139,58	A	16	–	–	–	–	–	0,59	**PHS 06B-1A46**
			B	–	14	48	78	32	5,31	1,68	**PHS 06B-1B46**
	47	142,61	A	16	–	–	–	–	–	0,61	**PHS 06B-1A47**
			B	–	14	48	78	32	5,31	1,76	**PHS 06B-1B47**
	48	145,64	A	16	–	–	–	–	–	0,63	**PHS 06B-1A48**
			B	–	14	48	78	32	5,31	1,84	**PHS 06B-1B48**
	50	151,69	A	16	–	–	–	–	–	0,65	**PHS 06B-1A50**
			B	–	14	48	78	32	5,31	2,06	**PHS 06B-1B50**
	54	163,82	A	16	–	–	–	–	–	0,68	**PHS 06B-1A54**
			B	–	14	48	78	32	5,31	2,32	**PHS 06B-1B54**
	57	172,91	A	16	–	–	–	–	–	1,71	**PHS 06B-1A57**
			B	–	14	40	78	32	5,31	1,70	**PHS 06B-1B57**
	60	182,00	A	16	–	–	–	–	–	0,91	**PHS 06B-1A60**
			B	–	14	48	78	32	5,31	2,80	**PHS 06B-1B60**
	64	194,12	A	20	–	–	–	–	–	0,97	**PHS 06B-1A64**
			B	–	14	48	78	32	5,31	3,12	**PHS 06B-1B64**
	65	197,15	A	20	–	–	–	–	–	1,01	**PHS 06B-1A65**
			B	–	14	48	78	32	5,31	3,31	**PHS 06B-1B65**
	70	212,30	A	20	–	–	–	–	–	1,06	**PHS 06B-1A70**
			B	–	14	48	78	32	5,31	3,60	**PHS 06B-1B70**
	72	218,37	A	20	–	–	–	–	–	1,09	**PHS 06B-1A72**
			B	–	14	48	78	32	5,31	3,76	**PHS 06B-1B72**
	76	230,49	A	20	–	–	–	–	–	1,64	**PHS 06B-1A76**
			B	–	14	48	78	32	5,31	2,79	**PHS 06B-1B76**

Maximum bores can accommodate standard keyways. Larger bores are available where a shallow keyway is used or no keyway is required.
All Type B or C sprockets, up to and including 25 tooth, are with hardened teeth as standard.
For any additional size sprockets with hardened teeth, add "H" before the number of teeth, e.g. PHS 08B-1AH8.

Metric sprockets, simplex, pilot bore

ISO 06B-1 · 9,525 mm pitch | ISO 08B-1 · 12,70 mm pitch

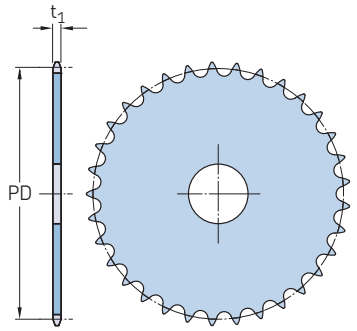

Type A

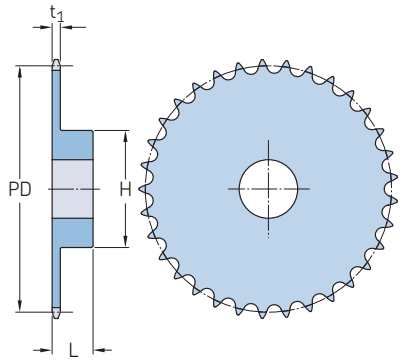

Type B

Pitch	Number of teeth	Pitch diameter PD	Type	Dimensions Bore stock	Bore Min.	Bore Max.	Hub H	Hub L	Plate thickness t_1	Mass	Designation
mm	–	mm	–	mm						kg	–
9,525	80	242,61	A	20	–	–	–	–	–	1,53	**PHS 06B-1A80**
			B	–	14	52	78	32	5,31	4,40	**PHS 06B-1B80**
	84	254,74	A	20	–	–	–	–	–	1,60	**PHS 06B-1A84**
			B	–	14	52	80	32	5,31	4,72	**PHS 06B-1B84**
	85	257,77	A	20	–	–	–	–	–	1,66	**PHS 06B-1A85**
			B	–	14	52	80	32	5,31	4,93	**PHS 06B-1B85**
	90	272,93	A	20	–	–	–	–	–	1,72	**PHS 06B-1A90**
			B	–	14	55	80	32	5,31	5,20	**PHS 06B-1B90**
	92	278,99	A	20	–	–	–	–	–	2,16	**PHS 06B-1A92**
			B	–	14	55	80	32	5,31	5,45	**PHS 06B-1B92**
	95	288,08	A	20	–	–	–	–	–	2,60	**PHS 06B-1A95**
			B	–	14	55	80	32	5,31	3,95	**PHS 06B-1B95**
	96	291,11	A	20	–	–	–	–	–	2,20	**PHS 06B-1A96**
			B	–	14	55	80	32	5,31	5,68	**PHS 06B-1B96**
	114	345,68	A	20	–	–	–	–	–	3,13	**PHS 06B-1A114**
			B	–	14	55	80	32	5,31	7,12	**PHS 06B-1B114**
12,70	8	33,18	A	8	–	–	–	–	–	0,03	**PHS 08B-1A8**
			B	–	10	10	20	25	7,37	0,06	**PHS 08B-1BH8**
	9	37,13	A	8	–	–	–	–	–	0,04	**PHS 08B-1A9**
			B	–	10	10	24	25	7,37	0,09	**PHS 08B-1BH9**
	10	41,10	A	8	–	–	–	–	–	0,06	**PHS 08B-1A10**
			B	–	10	11	26	25	7,37	0,12	**PHS 08B-1BH10**
	11	45,07	A	10	–	–	–	–	–	0,07	**PHS 08B-1A11**
			B	–	10	13	29	25	7,37	0,15	**PHS 08B-1BH11**
	12	49,07	A	10	–	–	–	–	–	0,09	**PHS 08B-1A12**
			B	–	10	17	33	28	7,37	0,21	**PHS 08B-1BH12**
	13	53,06	A	10	–	–	–	–	–	0,10	**PHS 08B-1A13**
			B	–	10	20	37	28	7,37	0,27	**PHS 08B-1BH13**
	14	57,07	A	10	–	–	–	–	–	0,12	**PHS 08B-1A14**
			B	–	10	24	41	28	7,37	0,33	**PHS 08B-1BH14**
	15	61,09	A	10	–	–	–	–	–	0,13	**PHS 08B-1A15**
			B	–	10	28	45	28	7,37	0,39	**PHS 08B-1BH15**
	16	65,10	A	10	–	–	–	–	–	0,16	**PHS 08B-1A16**
			B	–	12	30	50	28	7,37	0,46	**PHS 08B-1BH16**
	17	69,11	A	10	–	–	–	–	–	0,18	**PHS 08B-1A17**
			B	–	12	30	52	28	7,37	0,51	**PHS 08B-1BH17**
	18	73,14	A	10	–	–	–	–	–	0,20	**PHS 08B-1A18**
			B	–	12	35	56	28	7,37	0,59	**PHS 08B-1BH18**
	19	77,16	A	10	–	–	–	–	–	0,23	**PHS 08B-1A19**
			B	–	12	40	60	28	7,37	0,67	**PHS 08B-1BH19**
	20	81,19	A	10	–	–	–	–	–	0,25	**PHS 08B-1A20**
			B	–	12	40	64	28	7,37	0,77	**PHS 08B-1BH20**
	21	85,22	A	12	–	–	–	–	–	0,26	**PHS 08B-1A21**
			B	–	12	40	68	28	7,37	0,85	**PHS 08B-1BH21**

Pitch	Number of teeth	Pitch diameter PD	Type	Dimensions Bore stock	Bore Min.	Bore Max.	Hub H	Hub L	Plate thickness t_1	Mass	Designation
mm	–	mm	–	mm						kg	–
12,70	22	89,24	A	12	–	–	–	–	–	0,30	**PHS 08B-1A22**
			B	–	12	40	70	28	7,37	0,92	**PHS 08B-1BH22**
	23	93,27	A	12	–	–	–	–	–	0,34	**PHS 08B-1A23**
			B	–	14	40	70	28	7,37	0,95	**PHS 08B-1BH23**
	24	97,29	A	12	–	–	–	–	–	0,37	**PHS 08B-1A24**
			B	–	14	40	70	28	7,37	0,98	**PHS 08B-1BH24**
	25	101,33	A	12	–	–	–	–	–	0,41	**PHS 08B-1A25**
			B	–	14	40	70	28	7,37	1,01	**PHS 08B-1BH25**
	26	105,36	A	16	–	–	–	–	–	0,44	**PHS 08B-1A26**
			B	–	16	46	70	30	7,37	1,09	**PHS 08B-1B26**
	27	109,40	A	16	–	–	–	–	–	0,48	**PHS 08B-1A27**
			B	–	16	46	70	30	7,37	1,13	**PHS 08B-1B27**
	28	113,42	A	16	–	–	–	–	–	0,51	**PHS 08B-1A28**
			B	–	16	46	70	30	7,37	1,17	**PHS 08B-1B28**
	29	117,46	A	16	–	–	–	–	–	0,55	**PHS 08B-1A29**
			B	–	16	46	80	30	7,37	1,41	**PHS 08B-1B29**
	30	121,50	A	16	–	–	–	–	–	0,59	**PHS 08B-1A30**
			B	–	16	46	80	30	7,37	1,46	**PHS 08B-1B30**
	31	125,54	A	16	–	–	–	–	–	0,63	**PHS 08B-1A31**
			B	–	16	46	90	30	7,37	1,75	**PHS 08B-1B31**
	32	129,56	A	16	–	–	–	–	–	0,68	**PHS 08B-1A32**
			B	–	16	46	90	30	7,37	1,79	**PHS 08B-1B32**
	33	133,60	A	16	–	–	–	–	–	0,72	**PHS 08B-1A33**
			B	–	16	46	90	30	7,37	1,83	**PHS 08B-1B33**
	34	137,64	A	16	–	–	–	–	–	0,78	**PHS 08B-1A34**
			B	–	16	46	90	30	7,37	1,87	**PHS 08B-1B34**
	35	141,68	A	16	–	–	–	–	–	0,81	**PHS 08B-1A35**
			B	–	16	46	90	30	7,37	1,94	**PHS 08B-1B35**
	36	145,72	A	16	–	–	–	–	–	0,87	**PHS 08B-1A36**
			B	–	16	50	90	35	7,37	2,21	**PHS 08B-1B36**
	37	149,76	A	16	–	–	–	–	–	0,92	**PHS 08B-1A37**
			B	–	16	50	90	35	7,37	2,24	**PHS 08B-1B37**
	38	153,80	A	16	–	–	–	–	–	0,97	**PHS 08B-1A38**
			B	–	16	50	90	35	7,37	2,33	**PHS 08B-1B38**
	39	157,83	A	16	–	–	–	–	–	1,02	**PHS 08B-1A39**
			B	–	16	50	90	35	7,37	2,30	**PHS 08B-1B39**
	40	161,87	A	16	–	–	–	–	–	1,08	**PHS 08B-1A40**
			B	–	16	50	90	35	7,37	2,44	**PHS 08B-1B40**
	41	165,91	A	20	–	–	–	–	–	1,10	**PHS 08B-1A41**
			B	–	16	50	90	40	7,37	2,41	**PHS 08B-1B41**
	42	169,95	A	20	–	–	–	–	–	1,00	**PHS 08B-1A42**
			B	–	16	60	90	40	7,37	2,38	**PHS 08B-1B42**
	43	173,99	A	20	–	–	–	–	–	1,24	**PHS 08B-1A43**
			B	–	16	50	90	40	7,37	2,35	**PHS 08B-1B43**

Maximum bores can accommodate standard keyways. Larger bores are available where a shallow keyway is used or no keyway is required.
All Type B or C sprockets, up to and including 25 tooth, are with hardened teeth as standard.
For any additional size sprockets with hardened teeth, add "H" before the number of teeth, e.g. PHS 08B-1AH8.

Metric sprockets, simplex, pilot bore

ISO 08B-1 · 12,70 mm pitch | ISO 10B-1 · 15,88 mm pitch

Pitch	Number of teeth	Pitch diameter PD	Type	Dimensions Bore stock	Bore Min.	Bore Max.	Hub H	Hub L	Plate thickness t_1	Mass	Designation
mm	–	mm	–	mm						kg	–
12,70	44	178,03	A	20	–	–	–	–	–	1,28	**PHS 08B-1A44**
			B	–	16	50	90	40	7,37	2,32	**PHS 08B-1B44**
	45	182,07	A	20	–	–	–	–	–	1,00	**PHS 08B-1A45**
			B	–	16	50	90	40	7,37	2,30	**PHS 08B-1B45**
	46	186,10	A	20	–	–	–	–	–	1,43	**PHS 08B-1A46**
			B	–	16	50	90	40	7,37	2,45	**PHS 08B-1B46**
	47	190,14	A	20	–	–	–	–	–	1,50	**PHS 08B-1A47**
			B	–	16	50	90	40	7,37	2,60	**PHS 08B-1B47**
	48	194,18	A	20	–	–	–	–	–	1,57	**PHS 08B-1A48**
			B	–	16	64	90	40	7,37	2,85	**PHS 08B-1B48**
	50	208,30	A	20	–	–	–	–	–	1,81	**PHS 08B-1A50**
			B	–	16	64	90	40	7,37	2,92	**PHS 08B-1B50**
	54	218,43	A	20	–	–	–	–	–	2,00	**PHS 08B-1A54**
			B	–	16	64	90	40	7,37	3,00	**PHS 08B-1B54**
	57	230,54	A	20	–	–	–	–	–	2,22	**PHS 08B-1A57**
			B	–	16	50	90	40	7,37	3,13	**PHS 08B-1B57**
	60	242,66	A	20	–	–	–	–	–	2,50	**PHS 08B-1A60**
			B	–	16	64	90	40	7,37	3,30	**PHS 08B-1B60**
	64	258,82	A	25	–	–	–	–	–	2,87	**PHS 08B-1A64**
			B	–	16	64	90	40	7,37	3,60	**PHS 08B-1B64**
	70	283,07	A	25	–	–	–	–	–	3,43	**PHS 08B-1A70**
			B	–	16	64	90	40	7,37	3,80	**PHS 08B-1B70**
	72	291,16	A	25	–	–	–	–	–	3,62	**PHS 08B-1A72**
			B	–	16	64	90	40	7,37	4,00	**PHS 08B-1B72**
	76	307,33	A	25	–	–	–	–	–	3,99	**PHS 08B-1A76**
			B	–	16	50	90	40	7,37	4,12	**PHS 08B-1B76**
	80	323,48	A	25	–	–	–	–	–	4,46	**PHS 08B-1A80**
			B	–	16	64	90	40	7,37	5,00	**PHS 08B-1B80**
	84	339,65	A	25	–	–	–	–	–	4,93	**PHS 08B-1A84**
			B	–	16	64	90	40	7,37	6,12	**PHS 08B-1B84**
	85	343,69	A	25	–	–	–	–	–	5,05	**PHS 08B-1A85**
			B	–	16	64	90	40	7,37	6,32	**PHS 08B-1B85**
	92	371,99	A	25	–	–	–	–	–	5,88	**PHS 08B-1A92**
			B	–	16	64	90	40	7,37	6,92	**PHS 08B-1B92**
	95	384,11	A	25	–	–	–	–	–	6,23	**PHS 08B-1A95**
			B	–	16	55	90	40	7,37	7,38	**PHS 08B-1B95**
	96	388,15	A	25	–	–	–	–	–	6,35	**PHS 08B-1A96**
			B	–	16	64	90	40	7,37	8,00	**PHS 08B-1B96**
	114	460,90	A	25	–	–	–	–	–	8,47	**PHS 08B-1A114**
			B	–	16	64	90	40	7,37	9,50	**PHS 08B-1B114**
15,88	8	41,48	A	10	–	–	–	–	–	0,07	**PHS 10B-1A8**
			B	–	10	11	25	25	9,17	0,12	**PHS 10B-1BH8**
	9	46,42	A	10	–	–	–	–	–	0,10	**PHS 10B-1A9**
			B	–	10	15	30	25	9,17	0,17	**PHS 10B-1BH9**
	10	51,37	A	10	–	–	–	–	–	0,12	**PHS 10B-1A10**
			B	–	10	18	35	25	9,17	0,23	**PHS 10B-1BH10**
	11	56,34	A	10	–	–	–	–	–	0,15	**PHS 10B-1A11**
			B	–	12	21	37	30	9,17	0,30	**PHS 10B-1BH11**
	12	61,34	A	10	–	–	–	–	–	0,18	**PHS 10B-1A12**
			B	–	12	25	42	30	9,17	0,38	**PHS 10B-1BH12**
	13	66,32	A	10	–	–	–	–	–	0,21	**PHS 10B-1A13**
			B	–	12	28	47	30	9,17	0,47	**PHS 10B-1BH13**
	14	71,34	A	10	–	–	–	–	–	0,24	**PHS 10B-1A14**
			B	–	12	32	52	30	9,17	0,57	**PHS 10B-1BH14**
	15	76,36	A	10	–	–	–	–	–	0,28	**PHS 10B-1A15**
			B	–	12	35	57	30	9,17	0,69	**PHS 10B-1BH15**
	16	81,37	A	12	–	–	–	–	–	0,31	**PHS 10B-1A16**
			B	–	12	40	60	30	9,17	0,77	**PHS 10B-1BH16**
	17	86,39	A	12	–	–	–	–	–	0,36	**PHS 10B-1A17**
			B	–	12	40	60	30	9,17	0,82	**PHS 10B-1BH17**
15,88	18	91,42	A	12	–	–	–	–	–	0,41	**PHS 10B-1A18**
			B	–	14	50	70	30	9,17	1,02	**PHS 10B-1BH18**
	19	96,45	A	12	–	–	–	–	–	0,46	**PHS 10B-1A19**
			B	–	14	50	70	30	9,17	1,06	**PHS 10B-1BH19**
	20	101,49	A	12	–	–	–	–	–	0,52	**PHS 10B-1A20**
			B	–	14	50	75	30	9,17	1,22	**PHS 10B-1BH20**
	21	106,52	A	12	–	–	–	–	–	0,57	**PHS 10B-1A21**
			B	–	16	50	75	30	9,17	1,26	**PHS 10B-1BH21**
	22	111,55	A	12	–	–	–	–	–	0,62	**PHS 10B-1A22**
			B	–	16	50	80	30	9,17	1,42	**PHS 10B-1BH22**
	23	116,58	A	12	–	–	–	–	–	0,67	**PHS 10B-1A23**
			B	–	16	50	80	30	9,17	1,47	**PHS 10B-1BH23**
	24	121,62	A	12	–	–	–	–	–	0,74	**PHS 10B-1A24**
			B	–	16	50	80	30	9,17	1,55	**PHS 10B-1BH24**
	25	126,66	A	12	–	–	–	–	–	0,81	**PHS 10B-1A25**
			B	–	16	50	80	30	9,17	1,62	**PHS 10B-1BH25**
	26	131,70	A	16	–	–	–	–	–	0,88	**PHS 10B-1A26**
			B	–	20	55	85	35	9,17	2,00	**PHS 10B-1B26**
	27	136,75	A	16	–	–	–	–	–	0,96	**PHS 10B-1A27**
			B	–	20	55	85	35	9,17	2,05	**PHS 10B-1B27**
	28	141,78	A	16	–	–	–	–	–	1,02	**PHS 10B-1A28**
			B	–	20	55	90	35	9,17	2,27	**PHS 10B-1B28**
	29	146,83	A	16	–	–	–	–	–	1,09	**PHS 10B-1A29**
			B	–	20	55	90	35	9,17	2,35	**PHS 10B-1B29**
	30	151,87	A	16	–	–	–	–	–	1,20	**PHS 10B-1A30**
			B	–	20	58	90	35	9,17	2,42	**PHS 10B-1B30**
	31	156,92	A	16	–	–	–	–	–	1,28	**PHS 10B-1A31**
			B	–	20	58	95	35	9,17	2,66	**PHS 10B-1B31**
	32	161,95	A	16	–	–	–	–	–	1,38	**PHS 10B-1A32**
			B	–	20	58	95	35	9,17	2,74	**PHS 10B-1B32**
	33	167,00	A	16	–	–	–	–	–	1,46	**PHS 10B-1A33**
			B	–	20	58	95	35	9,17	2,80	**PHS 10B-1B33**
	34	172,05	A	16	–	–	–	–	–	1,55	**PHS 10B-1A34**
			B	–	20	58	95	35	9,17	2,90	**PHS 10B-1B34**
	35	177,10	A	16	–	–	–	–	–	1,63	**PHS 10B-1A35**
			B	–	20	58	95	35	9,17	3,03	**PHS 10B-1B35**
	36	182,15	A	20	–	–	–	–	–	2,00	**PHS 10B-1A36**
			B	–	20	63	100	35	9,17	3,27	**PHS 10B-1B36**
	37	187,20	A	20	–	–	–	–	–	1,85	**PHS 10B-1A37**
			B	–	20	63	100	35	9,17	3,39	**PHS 10B-1B37**
	38	192,24	A	20	–	–	–	–	–	1,93	**PHS 10B-1A38**
			B	–	20	63	100	35	9,17	3,49	**PHS 10B-1B38**
	39	197,29	A	20	–	–	–	–	–	2,05	**PHS 10B-1A39**
			B	–	20	63	100	35	9,17	3,58	**PHS 10B-1B39**
	40	202,34	A	20	–	–	–	–	–	2,15	**PHS 10B-1A40**
			B	–	20	63	100	35	9,17	3,69	**PHS 10B-1B40**
	41	207,39	A	20	–	–	–	–	–	2,25	**PHS 10B-1A41**
			B	–	20	57	100	40	9,17	3,78	**PHS 10B-1B41**
	42	212,44	A	20	–	–	–	–	–	2,38	**PHS 10B-1A42**
			B	–	20	57	100	40	9,17	3,87	**PHS 10B-1B42**
	43	217,49	A	20	–	–	–	–	–	2,49	**PHS 10B-1A43**
			B	–	20	57	100	40	9,17	3,96	**PHS 10B-1B43**
	44	222,53	A	20	–	–	–	–	–	2,61	**PHS 10B-1A44**
			B	–	20	57	100	40	9,17	4,05	**PHS 10B-1B44**
	45	227,58	A	20	–	–	–	–	–	2,74	**PHS 10B-1A45**
			B	–	20	55	100	40	9,17	4,18	**PHS 10B-1B45**
	46	232,63	A	20	–	–	–	–	–	2,87	**PHS 10B-1A46**
			B	–	20	64	100	40	9,17	4,34	**PHS 10B-1B46**
	47	237,68	A	20	–	–	–	–	–	2,99	**PHS 10B-1A47**
			B	–	20	64	100	40	9,17	4,50	**PHS 10B-1B47**

Maximum bores can accommodate standard keyways. Larger bores are available where a shallow keyway is used or no keyway is required.
All Type B or C sprockets, up to and including 25 tooth, are with hardened teeth as standard.
For any additional size sprockets with hardened teeth, add "H" before the number of teeth, e.g. PHS 08B-1AH8.

Metric sprockets, simplex, pilot bore

ISO 10B-1 · 15,88 mm pitch | ISO 12B-1 · 19,05 mm pitch

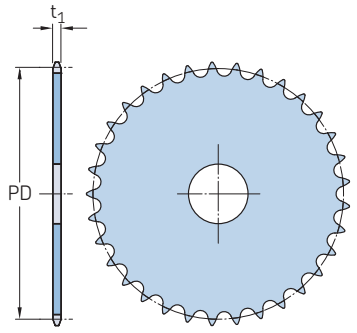

Type A

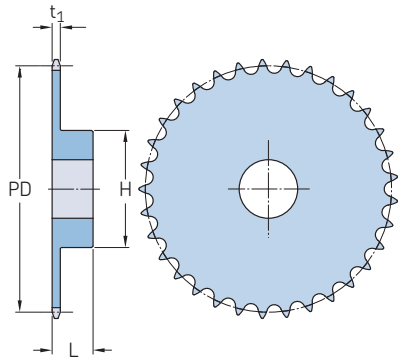

Type B

Pitch	Number of teeth	Pitch diameter PD	Type	Dimensions Bore stock	Bore Min.	Bore Max.	Hub H	Hub L	Plate thickness t_1	Mass	Designation
mm	–	mm	–	mm						kg	–
15,88	48	242,73	A	20	–	–	–	–	–	3,13	**PHS 10B-1A48**
			B	–	20	64	100	40	9,17	4,66	**PHS 10B-1B48**
	49	247,78	A	20	–	–	–	–	–	3,28	**PHS 10B-1A49**
			B	–	20	64	100	40	9,17	4,82	**PHS 10B-1B49**
	50	252,82	A	20	–	–	–	–	–	3,43	**PHS 10B-1A50**
			B	–	20	64	100	40	9,17	4,98	**PHS 10B-1B50**
	51	257,87	A	20	–	–	–	–	–	3,57	**PHS 10B-1A51**
			B	–	20	64	100	40	9,17	5,14	**PHS 10B-1B51**
	52	262,92	A	20	–	–	–	–	–	3,72	**PHS 10B-1A52**
			B	–	20	64	100	40	9,17	5,30	**PHS 10B-1B52**
	53	267,97	A	20	–	–	–	–	–	3,87	**PHS 10B-1A53**
			B	–	20	64	100	40	9,17	5,46	**PHS 10B-1B53**
	54	273,03	A	20	–	–	–	–	–	4,02	**PHS 10B-1A54**
			B	–	20	64	100	40	9,17	5,62	**PHS 10B-1B54**
	55	278,08	A	20	–	–	–	–	–	4,16	**PHS 10B-1A55**
			B	–	20	64	100	40	9,17	5,78	**PHS 10B-1B55**
	56	283,13	A	25	–	–	–	–	–	4,31	**PHS 10B-1A56**
			B	–	20	64	100	40	9,17	5,94	**PHS 10B-1B56**
	57	288,18	A	25	–	–	–	–	–	4,46	**PHS 10B-1A57**
			B	–	20	55	100	40	9,17	6,00	**PHS 10B-1B57**
	58	293,23	A	25	–	–	–	–	–	4,64	**PHS 10B-1A58**
			B	–	20	64	100	43	9,17	6,44	**PHS 10B-1B58**
	59	298,27	A	25	–	–	–	–	–	4,83	**PHS 10B-1A59**
			B	–	20	64	100	43	9,17	6,88	**PHS 10B-1B59**
	60	303,32	A	25	–	–	–	–	–	5,01	**PHS 10B-1A60**
			B	–	20	64	100	43	9,17	7,32	**PHS 10B-1B60**
	65	328,58	A	25	–	–	–	–	–	5,92	**PHS 10B-1A65**
			B	–	20	64	100	43	9,17	7,48	**PHS 10B-1B65**
	70	353,84	A	25	–	–	–	–	–	6,83	**PHS 10B-1A70**
			B	–	20	64	100	43	9,17	7,76	**PHS 10B-1B70**
	72	363,95	A	25	–	–	–	–	–	7,20	**PHS 10B-1A72**
			B	–	20	64	100	43	9,17	8,20	**PHS 10B-1B72**
	76	384,16	A	25	–	–	–	–	–	7,93	**PHS 10B-1A76**
			B	–	20	60	100	43	9,17	8,68	**PHS 10B-1B76**
	80	404,35	A	25	–	–	–	–	–	8,89	**PHS 10B-1A80**
			B	–	20	70	100	43	9,17	10,20	**PHS 10B-1B80**
	84	424,57	A	30	–	–	–	–	–	9,85	**PHS 10B-1A84**
			B	–	20	70	100	50	9,17	11,72	**PHS 10B-1B84**
	85	429,62	A	30	–	–	–	–	–	10,09	**PHS 10B-1A85**
			B	–	20	70	100	50	9,17	12,12	**PHS 10B-1B85**
	92	464,98	A	30	–	–	–	–	–	11,76	**PHS 10B-1A92**
			B	–	20	70	100	50	9,17	12,91	**PHS 10B-1B92**
	95	480,14	A	30	–	–	–	–	–	12,48	**PHS 10B-1A95**
			B	–	20	60	100	50	9,17	13,24	**PHS 10B-1B95**

Pitch	Number of teeth	Pitch diameter PD	Type	Dimensions Bore stock	Bore Min.	Bore Max.	Hub H	Hub L	Plate thickness t_1	Mass	Designation
mm	–	mm	–	mm						kg	–
15,88	96	485,19	A	30	–	–	–	–	–	12,72	**PHS 10B-1A96**
			B	–	20	70	100	50	9,17	14,00	**PHS 10B-1B96**
	112	566,03	A	30	–	–	–	–	–	16,55	**PHS 10B-1A112**
			B	–	20	70	100	50	9,17	15,55	**PHS 10B-1B112**
	114	576,13	A	30	–	–	–	–	–	17,03	**PHS 10B-1A114**
			B	–	20	70	100	50	9,17	16,25	**PHS 10B-1B114**
	120	606,45	A	30	–	–	–	–	–	18,50	**PHS 10B-1A120**
			B	–	20	70	100	50	9,17	18,25	**PHS 10B-1B120**
19,05	8	49,78	A	12	–	–	–	–	–	0,13	**PHS 12B-1A8**
			B	–	12	16	31	30	11,10	0,22	**PHS 12B-1BH8**
	9	55,70	A	12	–	–	–	–	–	0,16	**PHS 12B-1A9**
			B	–	12	20	37	30	11,10	0,31	**PHS 12B-1BH9**
	10	61,64	A	12	–	–	–	–	–	0,21	**PHS 12B-1A10**
			B	–	12	23	42	30	11,10	0,39	**PHS 12B-1BH10**
	11	67,61	A	14	–	–	–	–	–	0,25	**PHS 12B-1A11**
			B	–	14	28	46	35	11,10	0,54	**PHS 12B-1BH11**
	12	73,61	A	14	–	–	–	–	–	0,30	**PHS 12B-1A12**
			B	–	14	32	52	35	11,10	0,68	**PHS 12B-1BH12**
	13	79,59	A	14	–	–	–	–	–	0,37	**PHS 12B-1A13**
			B	–	14	36	58	35	11,10	0,84	**PHS 12B-1BH13**
	14	85,61	A	14	–	–	–	–	–	0,43	**PHS 12B-1A14**
			B	–	14	40	64	35	11,10	1,01	**PHS 12B-1BH14**
	15	91,63	A	14	–	–	–	–	–	0,50	**PHS 12B-1A15**
			B	–	14	44	70	35	11,10	1,19	**PHS 12B-1BH15**
	16	97,65	A	14	–	–	–	–	–	0,56	**PHS 12B-1A16**
			B	–	16	48	75	35	11,10	1,36	**PHS 12B-1BH16**
	17	103,67	A	14	–	–	–	–	–	0,65	**PHS 12B-1A17**
			B	–	16	55	80	35	11,10	1,56	**PHS 12B-1BH17**
	18	109,71	A	14	–	–	–	–	–	0,73	**PHS 12B-1A18**
			B	–	16	55	80	35	11,10	1,73	**PHS 12B-1BH18**
	19	115,75	A	14	–	–	–	–	–	0,82	**PHS 12B-1A19**
			B	–	16	55	80	35	11,10	1,73	**PHS 12B-1BH19**
	20	121,78	A	14	–	–	–	–	–	0,90	**PHS 12B-1A20**
			B	–	16	55	80	35	11,10	1,83	**PHS 12B-1BH20**
	21	127,82	A	16	–	–	–	–	–	0,99	**PHS 12B-1A21**
			B	–	20	55	90	40	11,10	2,37	**PHS 12B-1BH21**
	22	133,86	A	16	–	–	–	–	–	1,08	**PHS 12B-1A22**
			B	–	20	55	90	40	11,10	2,48	**PHS 12B-1BH22**
	23	139,90	A	16	–	–	–	–	–	1,21	**PHS 12B-1A23**
			B	–	20	55	90	40	11,10	2,58	**PHS 12B-1BH23**
	24	145,94	A	16	–	–	–	–	–	1,33	**PHS 12B-1A24**
			B	–	20	55	90	40	11,10	2,70	**PHS 12B-1BH24**
	25	152,00	A	16	–	–	–	–	–	1,43	**PHS 12B-1A25**
			B	–	20	55	90	40	11,10	2,81	**PHS 12B-1BH25**

Maximum bores can accommodate standard keyways. Larger bores are available where a shallow keyway is used or no keyway is required.
All Type B or C sprockets, up to and including 25 tooth, are with hardened teeth as standard.
For any additional size sprockets with hardened teeth, add "H" before the number of teeth, e.g. PHS 08B-1AH8.

Metric sprockets, simplex, pilot bore

ISO 12B-1 · 19,05 mm pitch | ISO 16B-1 · 25,40 mm pitch

Pitch	Number of teeth	Pitch diameter PD	Type	Dimensions Bore stock	Bore Min.	Bore Max.	Hub H	Hub L	Plate thickness t_1	Mass	Designation
mm	–	mm	–	mm						kg	–
19,05	26	158,04	A	16	–	–	–	–	–	1,57	**PHS 12B-1A26**
			B	–	20	58	95	40	11,10	3,11	**PHS 12B-1B26**
	27	164,09	A	16	–	–	–	–	–	1,69	**PHS 12B-1A27**
			B	–	20	58	95	40	11,10	3,24	**PHS 12B-1B27**
	28	170,13	A	16	–	–	–	–	–	1,83	**PHS 12B-1A28**
			B	–	20	58	95	40	11,10	3,37	**PHS 12B-1B28**
	29	176,19	A	16	–	–	–	–	–	1,97	**PHS 12B-1A29**
			B	–	20	60	95	40	11,10	3,49	**PHS 12B-1B29**
	30	182,25	A	16	–	–	–	–	–	2,11	**PHS 12B-1A30**
			B	–	20	60	95	40	11,10	3,66	**PHS 12B-1B30**
	31	188,31	A	20	–	–	–	–	–	2,26	**PHS 12B-1A31**
			B	–	20	64	95	40	11,10	3,96	**PHS 12B-1B31**
	32	194,36	A	20	–	–	–	–	–	2,37	**PHS 12B-1A32**
			B	–	20	64	95	40	11,10	4,14	**PHS 12B-1B32**
	33	200,40	A	20	–	–	–	–	–	2,58	**PHS 12B-1A33**
			B	–	20	64	95	40	11,10	4,28	**PHS 12B-1B33**
	34	206,46	A	20	–	–	–	–	–	2,72	**PHS 12B-1A34**
			B	–	20	64	95	40	11,10	4,45	**PHS 12B-1B34**
	35	212,52	A	20	–	–	–	–	–	2,90	**PHS 12B-1A35**
			B	–	20	64	95	40	11,10	4,62	**PHS 12B-1B35**
	36	218,58	A	20	–	–	–	–	–	3,04	**PHS 12B-1A36**
			B	–	20	70	100	40	11,10	4,79	**PHS 12B-1B36**
	37	224,64	A	20	–	–	–	–	–	3,27	**PHS 12B-1A37**
			B	–	20	70	100	40	11,10	4,97	**PHS 12B-1B37**
	38	230,69	A	20	–	–	–	–	–	3,42	**PHS 12B-1A38**
			B	–	20	70	100	40	11,10	5,15	**PHS 12B-1B38**
	39	236,75	A	20	–	–	–	–	–	3,61	**PHS 12B-1A39**
			B	–	20	70	100	40	11,10	5,34	**PHS 12B-1B39**
	40	242,81	A	20	–	–	–	–	–	3,80	**PHS 12B-1A40**
			B	–	20	70	100	40	11,10	5,54	**PHS 12B-1B40**
	41	248,87	A	25	–	–	–	–	–	3,97	**PHS 12B-1A41**
			B	–	20	70	110	56	11,10	5,78	**PHS 12B-1B41**
	42	254,93	A	25	–	–	–	–	–	4,18	**PHS 12B-1A42**
			B	–	20	70	110	56	11,10	6,02	**PHS 12B-1B42**
	43	260,98	A	25	–	–	–	–	–	4,43	**PHS 12B-1A43**
			B	–	20	70	110	56	11,10	6,26	**PHS 12B-1B43**
	44	267,04	A	25	–	–	–	–	–	4,60	**PHS 12B-1A44**
			B	–	20	70	110	56	11,10	6,50	**PHS 12B-1B44**
	45	273,10	A	25	–	–	–	–	–	4,77	**PHS 12B-1A45**
			B	–	20	60	110	56	11,10	6,30	**PHS 12B-1B45**
	46	279,16	A	25	–	–	–	–	–	5,07	**PHS 12B-1A46**
			B	–	20	70	110	56	11,10	6,98	**PHS 12B-1B46**
	47	285,21	A	25	–	–	–	–	–	5,30	**PHS 12B-1A47**
			B	–	20	70	110	56	11,10	7,22	**PHS 12B-1B47**
	48	291,27	A	25	–	–	–	–	–	5,55	**PHS 12B-1A48**
			B	–	20	70	110	56	11,10	7,46	**PHS 12B-1B48**
	49	297,33	A	25	–	–	–	–	–	5,81	**PHS 12B-1A49**
			B	–	20	70	110	56	11,10	7,70	**PHS 12B-1B49**
	50	303,39	A	25	–	–	–	–	–	6,06	**PHS 12B-1A50**
			B	–	20	70	110	56	11,10	7,94	**PHS 12B-1B50**
	54	327,64	A	25	–	–	–	–	–	7,08	**PHS 12B-1A54**
			B	–	20	70	110	56	11,10	8,90	**PHS 12B-1B54**
	57	345,81	A	25	–	–	–	–	–	7,84	**PHS 12B-1A57**
			B	–	20	60	110	56	11,10	7,75	**PHS 12B-1B57**
	60	363,99	A	25	–	–	–	–	–	8,82	**PHS 12B-1A60**
			B	–	20	70	110	56	11,10	10,34	**PHS 12B-1B60**
	65	394,29	A	25	–	–	–	–	–	10,46	**PHS 12B-1A65**
			B	–	20	70	110	56	11,10	11,64	**PHS 12B-1B65**
	68	412,49	A	30	–	–	–	–	–	11,44	**PHS 12B-1A68**
			B	–	20	70	110	56	11,10	12,20	**PHS 12B-1B68**
19,05	70	424,60	A	30	–	–	–	–	–	12,10	**PHS 12B-1A70**
			B	–	20	70	110	56	11,10	12,74	**PHS 12B-1B70**
	72	436,74	A	30	–	–	–	–	–	12,75	**PHS 12B-1A72**
			B	–	20	80	110	56	11,10	13,22	**PHS 12B-1B72**
	76	460,99	A	30	–	–	–	–	–	14,06	**PHS 12B-1A76**
			B	–	20	60	110	56	11,10	12,50	**PHS 12B-1B76**
	80	485,22	A	30	–	–	–	–	–	15,73	**PHS 12B-1A80**
			B	–	20	80	110	56	11,10	15,14	**PHS 12B-1B80**
	84	509,48	A	30	–	–	–	–	–	17,40	**PHS 12B-1A84**
			B	–	20	80	110	56	11,10	16,10	**PHS 12B-1B84**
	90	545,85	A	30	–	–	–	–	–	19,91	**PHS 12B-1A90**
			B	–	20	80	110	56	11,10	17,23	**PHS 12B-1B90**
	92	557,98	A	30	–	–	–	–	–	20,75	**PHS 12B-1A92**
			B	–	20	80	110	56	11,10	18,19	**PHS 12B-1B92**
	95	576,17	A	30	–	–	–	–	–	22,00	**PHS 12B-1A95**
			B	–	20	92	110	56	11,10	18,74	**PHS 12B-1B95**
	96	582,23	A	30	–	–	–	–	–	22,42	**PHS 12B-1A96**
			B	–	20	92	110	56	11,10	18,98	**PHS 12B-1B96**
	114	691,36	A	30	–	–	–	–	–	29,94	**PHS 12B-1A114**
			B	–	20	92	110	56	11,10	23,30	**PHS 12B-1B114**
25,40	8	66,37	A	12	–	–	–	–	–	0,34	**PHS 16B-1A8**
			B	–	16	22	42	35	16,18	0,50	**PHS 16B-1BH8**
	9	74,27	A	12	–	–	–	–	–	0,44	**PHS 16B-1A9**
			B	–	16	28	50	35	16,18	0,68	**PHS 16B-1BH9**
	10	82,19	A	12	–	–	–	–	–	0,96	**PHS 16B-1A10**
			B	–	16	34	55	35	16,18	0,87	**PHS 16B-1BH10**
	11	90,14	A	16	–	–	–	–	–	0,68	**PHS 16B-1A11**
			B	–	16	38	61	40	16,18	1,18	**PHS 16B-1BH11**
	12	98,14	A	16	–	–	–	–	–	0,81	**PHS 16B-1A12**
			B	–	16	44	69	40	16,18	1,48	**PHS 16B-1BH12**
	13	106,12	A	16	–	–	–	–	–	1,00	**PHS 16B-1A13**
			B	–	16	48	78	40	16,18	1,82	**PHS 16B-1BH13**
	14	114,15	A	16	–	–	–	–	–	1,13	**PHS 16B-1A14**
			B	–	16	53	84	40	16,18	2,14	**PHS 16B-1BH14**
	15	122,17	A	16	–	–	–	–	–	1,30	**PHS 16B-1A15**
			B	–	16	58	92	40	16,18	2,52	**PHS 16B-1BH15**
	16	130,20	A	20	–	–	–	–	–	1,49	**PHS 16B-1A16**
			B	–	20	64	100	45	16,18	3,19	**PHS 16B-1BH16**
	17	138,22	A	20	–	–	–	–	–	1,68	**PHS 16B-1A17**
			B	–	20	70	100	45	16,18	3,41	**PHS 16B-1BH17**
	18	146,28	A	20	–	–	–	–	–	1,91	**PHS 16B-1A18**
			B	–	20	70	100	45	16,18	3,62	**PHS 16B-1BH18**
	19	154,33	A	20	–	–	–	–	–	2,12	**PHS 16B-1A19**
			B	–	20	70	100	45	16,18	3,86	**PHS 16B-1BH19**
	20	162,38	A	20	–	–	–	–	–	2,39	**PHS 16B-1A20**
			B	–	20	70	100	45	16,18	4,10	**PHS 16B-1BH20**
	21	170,43	A	20	–	–	–	–	–	2,64	**PHS 16B-1A21**
			B	–	20	70	110	50	16,18	5,09	**PHS 16B-1BH21**
	22	178,48	A	20	–	–	–	–	–	2,91	**PHS 16B-1A22**
			B	–	20	70	110	50	16,18	5,35	**PHS 16B-1BH22**
	23	186,53	A	20	–	–	–	–	–	3,16	**PHS 16B-1A23**
			B	–	20	70	110	50	16,18	5,66	**PHS 16B-1BH23**
	24	194,59	A	20	–	–	–	–	–	3,43	**PHS 16B-1A24**
			B	–	20	70	110	50	16,18	5,94	**PHS 16B-1BH24**
	25	202,66	A	20	–	–	–	–	–	3,72	**PHS 16B-1A25**
			B	–	20	70	110	50	16,18	6,25	**PHS 16B-1BH25**
	26	210,72	A	20	–	–	–	–	–	4,08	**PHS 16B-1A26**
			B	–	20	76	120	50	16,18	7,07	**PHS 16B-1B26**
	27	218,79	A	20	–	–	–	–	–	4,40	**PHS 16B-1A27**
			B	–	20	76	120	50	16,18	7,39	**PHS 16B-1B27**

Maximum bores can accommodate standard keyways. Larger bores are available where a shallow keyway is used or no keyway is required.
All Type B or C sprockets, up to and including 25 tooth, are with hardened teeth as standard.
For any additional size sprockets with hardened teeth, add "H" before the number of teeth, e.g. PHS 08B-1AH8.

Metric sprockets, simplex, pilot bore

ISO 16B-1 · 25,40 mm pitch | ISO 20B-1 · 31,75 mm pitch

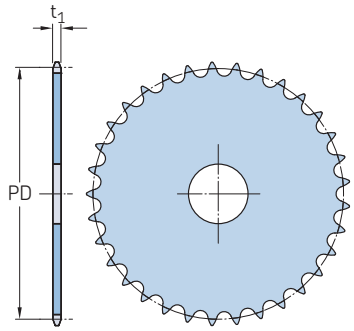

Type A

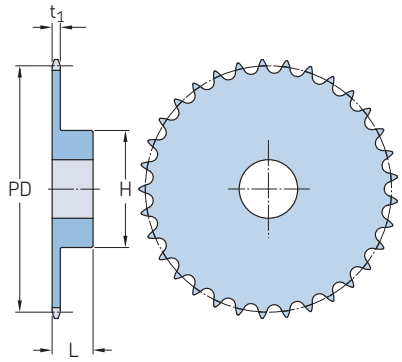

Type B

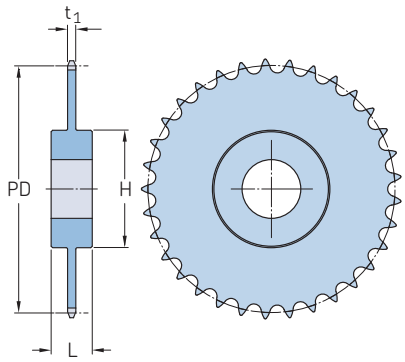

Type C

Pitch	Number of teeth	Pitch diameter PD	Type	Dimensions Bore stock	Bore Min.	Bore Max.	Hub H	Hub L	Plate thickness t_1	Mass	Designation
mm	–	mm	–	mm						kg	–
25,40	28	226,85	A	20	–	–	–	–	–	4,79	**PHS 16B-1A28**
			B	–	20	76	120	50	16,18	7,72	**PHS 16B-1B28**
	29	234,92	A	20	–	–	–	–	–	5,14	**PHS 16B-1A29**
			B	–	20	76	120	50	16,18	8,11	**PHS 16B-1B29**
	30	243,00	A	20	–	–	–	–	–	5,53	**PHS 16B-1A30**
			B	–	20	76	120	50	16,18	8,47	**PHS 16B-1B30**
	31	251,08	A	25	–	–	–	–	–	5,89	**PHS 16B-1A31**
			B	–	25	76	120	50	16,18	8,78	**PHS 16B-1B31**
	32	259,13	A	25	–	–	–	–	–	6,33	**PHS 16B-1A32**
			B	–	25	76	120	50	16,18	9,19	**PHS 16B-1B32**
	33	267,21	A	25	–	–	–	–	–	6,70	**PHS 16B-1A33**
			B	–	25	76	120	50	16,18	9,63	**PHS 16B-1B33**
	34	275,28	A	25	–	–	–	–	–	7,00	**PHS 16B-1A34**
			B	–	25	76	120	50	16,18	10,02	**PHS 16B-1B34**
	35	283,36	A	25	–	–	–	–	–	7,60	**PHS 16B-1A35**
			B	–	25	76	120	50	16,18	10,50	**PHS 16B-1B35**
	36	291,44	A	25	–	–	–	–	–	8,08	**PHS 16B-1A36**
			B	–	25	76	120	50	16,18	10,90	**PHS 16B-1B36**
	37	299,51	A	25	–	–	–	–	–	8,50	**PHS 16B-1A37**
			B	–	25	76	120	50	16,18	11,30	**PHS 16B-1B37**
	38	307,59	A	25	–	–	–	–	–	8,98	**PHS 16B-1A38**
			B	–	25	76	120	50	16,18	11,86	**PHS 16B-1B38**
	39	315,67	A	25	–	–	–	–	–	9,34	**PHS 16B-1A39**
			B	–	25	76	120	50	16,18	12,32	**PHS 16B-1B39**
	40	323,75	A	25	–	–	–	–	–	9,94	**PHS 16B-1A40**
			B	–	25	76	125	50	16,18	12,86	**PHS 16B-1B40**
	41	331,82	A	25	–	–	–	–	–	10,50	**PHS 16B-1A41**
			B	–	25	80	125	68	16,18	13,40	**PHS 16B-1B41**
	42	339,90	A	25	–	–	–	–	–	11,02	**PHS 16B-1A42**
			B	–	25	80	125	68	16,18	13,94	**PHS 16B-1B42**
	43	347,98	A	25	–	–	–	–	–	11,64	**PHS 16B-1A43**
			B	–	25	80	125	68	16,18	14,48	**PHS 16B-1B43**
	44	356,06	A	25	–	–	–	–	–	12,08	**PHS 16B-1A44**
			B	–	25	80	125	68	16,18	15,02	**PHS 16B-1B44**
	45	364,13	A	25	–	–	–	–	–	12,60	**PHS 16B-1A45**
			B	–	25	65	125	68	16,18	13,00	**PHS 16B-1B45**
	46	372,21	A	25	–	–	–	–	–	13,20	**PHS 16B-1A46**
			B	–	25	80	125	68	16,18	16,10	**PHS 16B-1B46**
	47	380,29	A	25	–	–	–	–	–	13,94	**PHS 16B-1A47**
			B	–	25	80	125	68	16,18	16,64	**PHS 16B-1B47**
	48	388,36	A	25	–	–	–	–	–	14,54	**PHS 16B-1A48**
			B	–	25	80	125	68	16,18	17,18	**PHS 16B-1B48**
	50	404,52	A	25	–	–	–	–	–	15,86	**PHS 16B-1A50**
			B	–	25	80	125	68	16,18	18,26	**PHS 16B-1B50**

Pitch	Number of teeth	Pitch diameter PD	Type	Dimensions Bore stock	Bore Min.	Bore Max.	Hub H	Hub L	Plate thickness t_1	Mass	Designation
mm	–	mm	–	mm						kg	–
25,40	54	436,85	A	30	–	–	–	–	–	18,51	**PHS 16B-1A54**
			B	–	25	85	125	68	16,18	20,42	**PHS 16B-1B54**
	57	461,07	A	30	–	–	–	–	–	20,50	**PHS 16B-1A57**
			B	–	25	65	125	68	16,18	15,50	**PHS 16B-1B57**
	60	485,32	A	30	–	–	–	–	–	22,95	**PHS 16B-1A60**
			B	–	25	85	133	68	16,18	23,66	**PHS 16B-1B60**
	65	525,73	A	30	–	–	–	–	–	27,03	**PHS 16B-1A65**
			B	–	25	85	140	68	16,18	26,36	**PHS 16B-1B65**
	70	566,14	A	30	–	–	–	–	–	31,11	**PHS 16B-1A70**
			C	–	25	108	140	68	16,18	29,06	**PHS 16B-1C70**
	72	582,32	A	30	–	–	–	–	–	32,74	**PHS 16B-1A72**
			C	–	25	108	140	68	16,18	30,14	**PHS 16B-1C72**
	76	614,65	A	30	–	–	–	–	–	36,00	**PHS 16B-1A76**
			C	–	25	75	140	68	16,18	28,50	**PHS 16B-1C76**
	80	646,96	A	30	–	–	–	–	–	40,42	**PHS 16B-1A80**
			C	–	25	108	140	68	16,18	34,46	**PHS 16B-1C80**
	84	679,30	A	30	–	–	–	–	–	44,84	**PHS 16B-1A84**
			C	–	25	108	140	78	16,18	36,62	**PHS 16B-1C84**
	90	727,81	A	30	–	–	–	–	–	51,47	**PHS 16B-1A90**
			C	–	25	108	140	78	16,18	39,86	**PHS 16B-1C90**
	95	768,22	A	30	–	–	–	–	–	57,00	**PHS 16B-1A95**
			C	–	25	85	140	78	16,18	42,56	**PHS 16B-1C95**
	96	766,31	A	30	–	–	–	–	–	58,11	**PHS 16B-1A96**
			C	–	25	108	140	78	16,18	43,10	**PHS 16B-1C96**
	114	921,81	A	30	–	–	–	–	–	78,00	**PHS 16B-1A114**
			C	–	25	108	140	78	16,18	52,82	**PHS 16B-1C114**
31,75	8	82,97	A	16	–	–	–	–	–	0,63	**PHS 20B-1A8**
			B	–	20	57	53	40	18,59	1,04	**PHS 20B-1BH8**
	9	92,83	A	16	–	–	–	–	–	0,95	**PHS 20B-1A9**
			B	–	20	57	63	40	18,59	1,45	**PHS 20B-1BH9**
	10	102,75	A	16	–	–	–	–	–	1,27	**PHS 20B-1A10**
			B	–	20	60	70	40	18,59	1,86	**PHS 20B-1BH10**
	11	112,70	A	16	–	–	–	–	–	1,59	**PHS 20B-1A11**
			B	–	20	70	77	45	18,59	2,40	**PHS 20B-1BH11**
	12	122,67	A	20	–	–	–	–	–	1,91	**PHS 20B-1A12**
			B	–	20	76	88	45	18,59	2,95	**PHS 20B-1BH12**
	13	132,67	A	20	–	–	–	–	–	2,18	**PHS 20B-1A13**
			B	–	20	76	98	45	18,59	3,00	**PHS 20B-1BH13**
	14	142,68	A	20	–	–	–	–	–	2,49	**PHS 20B-1A14**
			B	–	20	76	108	45	18,59	3,40	**PHS 20B-1BH14**
	15	152,71	A	20	–	–	–	–	–	2,68	**PHS 20B-1A15**
			B	–	20	76	118	50	18,59	4,31	**PHS 20B-1BH15**
	16	162,75	A	20	–	–	–	–	–	3,08	**PHS 20B-1A16**
			B	–	20	76	120	50	18,59	4,63	**PHS 20B-1BH16**

Maximum bores can accommodate standard keyways. Larger bores are available where a shallow keyway is used or no keyway is required.
All Type B or C sprockets, up to and including 25 tooth, are with hardened teeth as standard.
For any additional size sprockets with hardened teeth, add "H" before the number of teeth, e.g. PHS 08B-1AH8.

Metric sprockets, simplex, pilot bore

ISO 20B-1 · 31,75 mm pitch | ISO 24B-1 · 38,10 mm pitch

Pitch	Number of teeth	Pitch diameter PD	Type	Dimensions Bore stock	Bore Min.	Bore Max.	Hub H	Hub L	Plate thickness t_1	Mass	Designation
mm	–	mm	–	mm						kg	–
31,75	17	172,79	A	20	–	–	–	–	–	3,54	**PHS 20B-1A17**
			B	–	25	76	120	50	18,59	4,99	**PHS 20B-1BH17**
	18	182,84	A	20	–	–	–	–	–	3,81	**PHS 20B-1A18**
			B	–	25	76	120	50	18,59	5,44	**PHS 20B-1BH18**
	19	192,90	A	20	–	–	–	–	–	4,31	**PHS 20B-1A19**
			B	–	25	76	120	50	18,59	5,90	**PHS 20B-1BH19**
	20	202,96	A	20	–	–	–	–	–	4,58	**PHS 20B-1A20**
			B	–	25	76	120	50	18,59	6,35	**PHS 20B-1BH20**
	21	213,03	A	25	–	–	–	–	–	5,17	**PHS 20B-1A21**
			B	–	25	76	140	55	18,59	7,03	**PHS 20B-1BH21**
	22	223,10	A	25	–	–	–	–	–	5,72	**PHS 20B-1A22**
			B	–	25	76	140	55	18,59	7,71	**PHS 20B-1BH22**
	23	233,17	A	25	–	–	–	–	–	5,99	**PHS 20B-1A23**
			B	–	25	84	140	55	18,59	8,16	**PHS 20B-1BH23**
	24	243,25	A	25	–	–	–	–	–	6,62	**PHS 20B-1A24**
			B	–	25	84	140	55	18,59	8,62	**PHS 20B-1BH24**
	25	253,32	A	25	–	–	–	–	–	6,94	**PHS 20B-1A25**
			B	–	25	84	140	55	18,59	9,07	**PHS 20B-1BH25**
	26	263,41	A	25	–	–	–	–	–	7,62	**PHS 20B-1A26**
			B	–	25	84	150	55	18,59	9,53	**PHS 20B-1B26**
	27	273,49	A	25	–	–	–	–	–	8,35	**PHS 20B-1A27**
			B	–	25	84	150	55	18,59	10,43	**PHS 20B-1B27**
	28	283,57	A	25	–	–	–	–	–	8,85	**PHS 20B-1A28**
			B	–	25	84	150	55	18,59	11,34	**PHS 20B-1B28**
	29	293,66	A	25	–	–	–	–	–	9,43	**PHS 20B-1A29**
			B	–	25	84	150	55	18,59	11,76	**PHS 20B-1B29**
	30	303,75	A	25	–	–	–	–	–	9,98	**PHS 20B-1A30**
			B	–	25	84	150	55	18,59	12,02	**PHS 20B-1B30**
	31	313,83	A	25	–	–	–	–	–	10,73	**PHS 20B-1A31**
			B	–	25	84	150	55	18,59	12,77	**PHS 20B-1B31**
	32	323,92	A	25	–	–	–	–	–	11,49	**PHS 20B-1A32**
			B	–	25	84	150	55	18,59	13,52	**PHS 20B-1B32**
	33	334,01	A	25	–	–	–	–	–	12,24	**PHS 20B-1A33**
			B	–	25	84	150	55	18,59	14,59	**PHS 20B-1B33**
	34	344,10	A	25	–	–	–	–	–	13,00	**PHS 20B-1A34**
			B	–	25	84	150	55	18,59	15,66	**PHS 20B-1B34**
	35	354,20	A	25	–	–	–	–	–	13,75	**PHS 20B-1A35**
			B	–	25	84	150	55	18,59	16,74	**PHS 20B-1B35**
	36	364,29	A	25	–	–	–	–	–	14,50	**PHS 20B-1A36**
			B	–	25	84	150	55	18,59	17,51	**PHS 20B-1B36**
	37	374,38	A	25	–	–	–	–	–	15,25	**PHS 20B-1A37**
			B	–	25	84	150	55	18,59	18,17	**PHS 20B-1B37**
	38	384,48	A	25	–	–	–	–	–	16,01	**PHS 20B-1A38**
			B	–	25	84	150	55	18,59	18,82	**PHS 20B-1B38**
	39	394,57	A	25	–	–	–	–	–	16,76	**PHS 20B-1A39**
			B	–	25	84	150	55	18,59	19,78	**PHS 20B-1B39**
	40	404,67	A	25	–	–	–	–	–	17,52	**PHS 20B-1A40**
			B	–	25	84	150	55	18,59	21,27	**PHS 20B-1B40**
	41	414,77	A	30	–	–	–	–	–	18,27	**PHS 20B-1A41**
			B	–	25	84	150	70	18,59	22,07	**PHS 20B-1B41**
	42	424,88	A	30	–	–	–	–	–	19,03	**PHS 20B-1A42**
			B	–	25	84	150	70	18,59	22,86	**PHS 20B-1B42**
	43	434,96	A	30	–	–	–	–	–	19,78	**PHS 20B-1A43**
			B	–	25	84	150	70	18,59	23,40	**PHS 20B-1B43**
	44	445,06	A	30	–	–	–	–	–	20,53	**PHS 20B-1A44**
			B	–	25	84	150	70	18,59	23,95	**PHS 20B-1B44**
	45	455,15	A	30	–	–	–	–	–	21,29	**PHS 20B-1A45**
			B	–	25	84	150	70	18,59	24,49	**PHS 20B-1B45**
	46	465,25	A	30	–	–	–	–	–	22,04	**PHS 20B-1A46**
			B	–	25	84	150	70	18,59	26,31	**PHS 20B-1B46**
31,75	47	475,35	A	30	–	–	–	–	–	22,79	**PHS 20B-1A47**
			B	–	25	84	150	70	18,59	28,12	**PHS 20B-1B47**
	48	485,45	A	30	–	–	–	–	–	23,55	**PHS 20B-1A48**
			B	–	25	102	150	70	18,59	29,94	**PHS 20B-1B48**
	49	495,55	A	30	–	–	–	–	–	24,30	**PHS 20B-1A49**
			B	–	25	102	150	70	18,59	31,76	**PHS 20B-1B49**
	50	505,65	A	30	–	–	–	–	–	25,06	**PHS 20B-1A50**
			B	–	25	102	150	70	18,59	33,57	**PHS 20B-1B50**
	51	515,75	A	30	–	–	–	–	–	24,43	**PHS 20B-1A51**
			B	–	25	102	150	80	18,59	35,39	**PHS 20B-1B51**
	52	525,85	A	30	–	–	–	–	–	25,85	**PHS 20B-1A52**
			B	–	25	102	150	80	18,59	37,21	**PHS 20B-1B52**
	53	535,95	A	30	–	–	–	–	–	27,27	**PHS 20B-1A53**
			B	–	25	102	150	80	18,59	39,02	**PHS 20B-1B53**
	54	546,05	A	30	–	–	–	–	–	25,70	**PHS 20B-1A54**
			C	–	25	102	150	80	18,59	32,90	**PHS 20B-1C54**
	55	556,15	A	30	–	–	–	–	–	30,12	**PHS 20B-1A55**
			C	–	25	102	150	80	18,59	34,77	**PHS 20B-1C55**
	56	566,25	A	30	–	–	–	–	–	31,34	**PHS 20B-1A56**
			C	–	25	102	150	80	18,59	36,63	**PHS 20B-1C56**
	57	576,35	A	30	–	–	–	–	–	32,96	**PHS 20B-1A57**
			C	–	25	102	150	80	18,59	38,50	**PHS 20B-1C57**
	58	586,45	A	30	–	–	–	–	–	35,80	**PHS 20B-1A58**
			C	–	25	102	150	80	18,59	40,37	**PHS 20B-1C58**
	59	596,56	A	30	–	–	–	–	–	37,22	**PHS 20B-1A59**
			C	–	25	102	150	80	18,59	42,24	**PHS 20B-1C59**
	60	606,66	A	30	–	–	–	–	–	38,64	**PHS 20B-1A60**
			C	–	25	102	150	80	18,59	44,10	**PHS 20B-1C60**
	70	707,68	A	30	–	–	–	–	–	52,85	**PHS 20B-1A70**
			C	–	25	133	150	80	18,59	65,36	**PHS 20B-1C70**
	72	727,89	A	30	–	–	–	–	–	55,70	**PHS 20B-1A72**
			C	–	25	133	150	80	18,59	67,23	**PHS 20B-1C72**
	76	768,30	A	30	–	–	–	–	–	61,38	**PHS 20B-1A76**
			C	–	25	133	150	80	18,59	70,98	**PHS 20B-1C76**
	80	808,71	A	30	–	–	–	–	–	67,06	**PHS 20B-1A80**
			C	–	25	133	150	80	18,59	74,70	**PHS 20B-1C80**
	84	849,13	A	30	–	–	–	–	–	72,75	**PHS 20B-1A84**
			C	–	25	133	150	90	18,59	78,43	**PHS 20B-1C84**
	90	909,76	A	30	–	–	–	–	–	81,27	**PHS 20B-1A90**
			C	–	25	133	150	90	18,59	84,03	**PHS 20B-1C90**
	95	960,28	A	30	–	–	–	–	–	102,42	**PHS 20B-1A95**
			C	–	25	133	150	90	18,59	117,18	**PHS 20B-1C95**
	96	970,38	A	30	–	–	–	–	–	103,84	**PHS 20B-1A96**
			C	–	25	133	150	90	18,59	117,56	**PHS 20B-1C96**
	114	1 152,27	A	30	–	–	–	–	–	130,84	**PHS 20B-1A114**
			C	–	25	133	150	90	18,59	124,40	**PHS 20B-1C114**
38,10	9	111,40	A	20	–	–	–	–	–	1,69	**PHS 24B-1A9**
			B	–	20	45	70	45	24,13	2,02	**PHS 24B-1BH9**
	10	123,29	A	20	–	–	–	–	–	1,88	**PHS 24B-1A10**
			B	–	20	52	80	45	24,13	2,61	**PHS 24B-1BH10**
	11	135,23	A	20	–	–	–	–	–	2,06	**PHS 24B-1A11**
			B	–	25	60	90	50	24,13	3,77	**PHS 24B-1BH11**
	12	147,21	A	20	–	–	–	–	–	2,68	**PHS 24B-1A12**
			B	–	25	67	102	50	24,13	4,77	**PHS 24B-1BH12**
	13	159,20	A	20	–	–	–	–	–	3,06	**PHS 24B-1A13**
			B	–	25	76	114	50	24,13	5,91	**PHS 24B-1BH13**
	14	171,22	A	20	–	–	–	–	–	3,72	**PHS 24B-1A14**
			B	–	25	86	128	50	24,13	6,68	**PHS 24B-1BH14**
	15	183,25	A	20	–	–	–	–	–	4,31	**PHS 24B-1A15**
			B	–	25	92	132	50	24,13	7,49	**PHS 24B-1BH15**

Maximum bores can accommodate standard keyways. Larger bores are available where a shallow keyway is used or no keyway is required.
All Type B or C sprockets, up to and including 25 tooth, are with hardened teeth as standard.
For any additional size sprockets with hardened teeth, add "H" before the number of teeth, e.g. PHS 08B-1AH8.

Metric sprockets, simplex, pilot bore

ISO 24B-1 · 38,10 mm pitch | ISO 28B-1 · 44,45 mm pitch

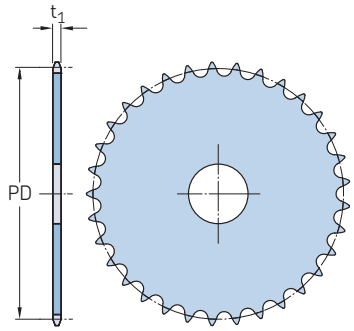

Type A

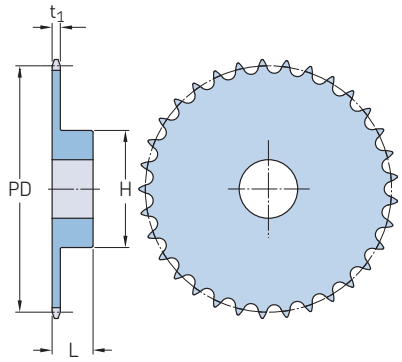

Type B

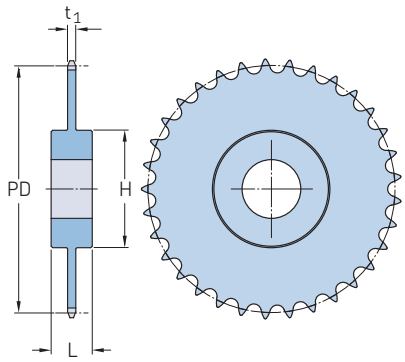

Type C

Pitch	Number of teeth	Pitch diameter PD	Type	Dimensions Bore stock	Bore Min.	Bore Max.	Hub H	Hub L	Plate thickness t_1	Mass	Designation
mm	–	mm	–	mm						kg	–
38,10	16	195,29	A	25	–	–	–	–	–	4,86	**PHS 24B-1A16**
			B	–	25	92	136	55	24,13	9,08	**PHS 24B-1BH16**
	17	207,35	A	25	–	–	–	–	–	5,44	**PHS 24B-1A17**
			B	–	25	92	136	55	24,13	9,76	**PHS 24B-1BH17**
	18	219,41	A	25	–	–	–	–	–	6,13	**PHS 24B-1A18**
			B	–	25	92	136	55	24,13	10,49	**PHS 24B-1BH18**
	19	231,48	A	25	–	–	–	–	–	7,03	**PHS 24B-1A19**
			B	–	25	92	136	55	24,13	11,21	**PHS 24B-1BH19**
	20	243,55	A	25	–	–	–	–	–	7,94	**PHS 24B-1A20**
			B	–	25	92	136	55	24,13	12,26	**PHS 24B-1BH20**
	21	255,63	A	25	–	–	–	–	–	8,62	**PHS 24B-1A21**
			B	–	25	92	150	60	24,13	13,38	**PHS 24B-1BH21**
	22	267,72	A	25	–	–	–	–	–	9,76	**PHS 24B-1A22**
			B	–	25	92	150	60	24,13	13,67	**PHS 24B-1BH22**
	23	179,80	A	25	–	–	–	–	–	10,43	**PHS 24B-1A23**
			B	–	25	92	150	60	24,13	14,74	**PHS 24B-1BH23**
	24	291,90	A	25	–	–	–	–	–	11,35	**PHS 24B-1A24**
			B	–	25	92	150	60	24,13	15,48	**PHS 24B-1BH24**
	25	303,99	A	25	–	–	–	–	–	12,47	**PHS 24B-1A25**
			B	–	25	92	150	60	24,13	16,38	**PHS 24B-1BH25**
	26	316,09	A	30	–	–	–	–	–	13,39	**PHS 24B-1A26**
			B	–	30	102	150	40	24,13	19,43	**PHS 24B-1B26**
	27	328,19	A	30	–	–	–	–	–	14,53	**PHS 24B-1A27**
			B	–	30	102	150	40	24,13	20,39	**PHS 24B-1B27**
	28	340,29	A	30	–	–	–	–	–	15,89	**PHS 24B-1A28**
			B	–	30	102	150	40	24,13	21,34	**PHS 24B-1B28**
	29	352,39	A	30	–	–	–	–	–	17,02	**PHS 24B-1A29**
			B	–	30	102	150	40	24,13	22,79	**PHS 24B-1B29**
	30	364,49	A	30	–	–	–	–	–	18,39	**PHS 24B-1A30**
			B	–	30	102	150	40	24,13	24,25	**PHS 24B-1B30**
	31	376,60	A	30	–	–	–	–	–	20,02	**PHS 24B-1A31**
			B	–	30	102	150	40	24,13	26,19	**PHS 24B-1B31**
	32	388,71	A	30	–	–	–	–	–	21,66	**PHS 24B-1A32**
			B	–	30	102	150	40	24,13	28,12	**PHS 24B-1B32**
	33	400,82	A	30	–	–	–	–	–	23,29	**PHS 24B-1A33**
			B	–	30	102	150	40	24,13	30,05	**PHS 24B-1B33**
	34	412,93	A	30	–	–	–	–	–	24,93	**PHS 24B-1A34**
			B	–	30	102	150	40	24,13	31,99	**PHS 24B-1B34**
	35	425,04	A	30	–	–	–	–	–	26,56	**PHS 24B-1A35**
			B	–	30	102	150	40	24,13	33,93	**PHS 24B-1B35**
	36	437,15	A	30	–	–	–	–	–	28,19	**PHS 24B-1A36**
			B	–	30	102	150	40	24,13	35,86	**PHS 24B-1B36**
	38	461,37	A	30	–	–	–	–	–	31,46	**PHS 24B-1A38**
			B	–	30	102	150	40	24,13	39,73	**PHS 24B-1B38**

Pitch	Number of teeth	Pitch diameter PD	Type	Dimensions Bore stock	Bore Min.	Bore Max.	Hub H	Hub L	Plate thickness t_1	Mass	Designation
mm	–	mm	–	mm						kg	–
38,10	40	485,60	A	30	–	–	–	–	–	36,23	**PHS 24B-1A40**
			B	–	30	102	150	40	24,13	42,52	**PHS 24B-1B40**
	42	509,83	A	30	–	–	–	–	–	40,99	**PHS 24B-1A42**
			C	–	30	102	160	90	24,13	45,31	**PHS 24B-1C42**
	45	546,19	A	30	–	–	–	–	–	48,14	**PHS 24B-1A45**
			C	–	30	102	160	90	24,13	50,71	**PHS 24B-1C45**
	48	482,54	A	30	–	–	–	–	–	55,29	**PHS 24B-1A48**
			C	–	30	102	160	90	24,13	57,43	**PHS 24B-1C48**
	50	606,78	A	30	–	–	–	–	–	60,05	**PHS 24B-1A50**
			C	–	30	102	160	90	24,13	61,57	**PHS 24B-1C50**
	54	655,26	A	30	–	–	–	–	–	69,58	**PHS 24B-1A54**
			C	–	30	102	160	100	24,13	69,84	**PHS 24B-1C54**
	57	691,62	A	30	–	–	–	–	–	76,73	**PHS 24B-1A57**
			C	–	30	133	160	100	24,13	76,05	**PHS 24B-1C57**
	60	727,99	A	30	–	–	–	–	–	85,19	**PHS 24B-1A60**
			C	–	30	133	160	100	24,13	80,05	**PHS 24B-1C60**
	68	824,97	A	40	–	–	–	–	–	107,74	**PHS 24B-1A68**
			C	–	30	133	160	100	24,13	93,39	**PHS 24B-1C68**
	72	873,43	A	40	–	–	–	–	–	119,02	**PHS 24B-1A72**
			C	–	30	133	160	100	24,13	111,51	**PHS 24B-1C72**
	76	921,96	A	40	–	–	–	–	–	130,30	**PHS 24B-1A76**
			C	–	30	133	160	100	24,13	129,62	**PHS 24B-1C76**
	95	921,96	A	40	–	–	–	–	–	183,88	**PHS 24B-1A95**
			C	–	30	133	160	100	24,13	215,67	**PHS 24B-1C95**
	96	921,96	A	40	–	–	–	–	–	186,70	**PHS 24B-1A96**
			C	–	30	133	160	100	24,13	220,20	**PHS 24B-1C96**
	114	921,96	A	40	–	–	–	–	–	237,46	**PHS 24B-1A114**
			C	–	30	133	160	100	24,13	301,71	**PHS 24B-1C114**
44,45	11	157,77	A	20	–	–	–	–	–	3,18	**PHS 28B-1A11**
			B	–	25	73	112	70	29,44	5,27	**PHS 28B-1BH11**
	12	171,74	A	20	–	–	–	–	–	3,95	**PHS 28B-1A12**
			B	–	25	84	125	70	29,44	6,40	**PHS 28B-1BH12**
	13	185,74	A	20	–	–	–	–	–	4,31	**PHS 28B-1A13**
			B	–	25	93	125	70	29,44	8,22	**PHS 28B-1BH13**
	14	199,76	A	20	–	–	–	–	–	4,77	**PHS 28B-1A14**
			B	–	25	93	125	70	29,44	9,13	**PHS 28B-1BH14**
	15	213,79	A	20	–	–	–	–	–	5,45	**PHS 28B-1A15**
			B	–	25	108	125	70	29,44	11,40	**PHS 28B-1BH15**
	16	227,84	A	30	–	–	–	–	–	6,81	**PHS 28B-1A16**
			B	–	30	108	160	75	29,44	12,76	**PHS 28B-1BH16**
	17	241,91	A	30	–	–	–	–	–	7,71	**PHS 28B-1A17**
			B	–	30	108	160	75	29,44	13,65	**PHS 28B-1BH17**
	18	255,98	A	30	–	–	–	–	–	8,63	**PHS 28B-1A18**
			B	–	30	108	160	75	29,44	13,65	**PHS 28B-1BH18**

Maximum bores can accommodate standard keyways. Larger bores are available where a shallow keyway is used or no keyway is required.
All Type B or C sprockets, up to and including 25 tooth, are with hardened teeth as standard.
For any additional size sprockets with hardened teeth, add "H" before the number of teeth, e.g. PHS 08B-1AH8.

Metric sprockets, simplex, pilot bore

ISO 28B-1 · 44,45 mm pitch | ISO 32B-1 · 50,80 mm pitch

Pitch	Number of teeth	Pitch diameter PD	Type	Dimensions Bore stock	Bore Min.	Bore Max.	Hub H	Hub L	Plate thickness t_1	Mass	Designation
mm	–	mm	–	mm						kg	–
44,45	19	270,06	A	30	–	–	–	–	–	9,53	**PHS 28B-1A19**
			B	–	30	108	160	75	29,44	15,01	**PHS 28B-1BH19**
	20	284,14	A	30	–	–	–	–	–	10,44	**PHS 28B-1A20**
			B	–	30	108	160	75	29,44	16,84	**PHS 28B-1BH20**
	21	298,24	A	30	–	–	–	–	–	11,79	**PHS 28B-1A21**
			B	–	30	108	160	75	29,44	18,19	**PHS 28B-1BH21**
	22	312,34	A	30	–	–	–	–	–	13,17	**PHS 28B-1A22**
			B	–	30	108	160	75	29,44	19,11	**PHS 28B-1BH22**
	23	326,44	A	30	–	–	–	–	–	14,06	**PHS 28B-1A23**
			B	–	30	108	160	75	29,44	20,46	**PHS 28B-1BH23**
	24	340,54	A	30	–	–	–	–	–	15,44	**PHS 28B-1A24**
			B	–	30	108	160	75	29,44	21,84	**PHS 28B-1BH24**
	25	354,65	A	30	–	–	–	–	–	16,78	**PHS 28B-1A25**
			B	–	30	108	160	75	29,44	22,73	**PHS 28B-1BH25**
	26	368,77	A	30	–	–	–	–	–	18,61	**PHS 28B-1A26**
			B	–	30	108	160	75	29,44	26,83	**PHS 28B-1B26**
	27	382,88	A	30	–	–	–	–	–	20,43	**PHS 28B-1A27**
			B	–	30	108	160	75	29,44	27,74	**PHS 28B-1B27**
	28	397,00	A	30	–	–	–	–	–	20,88	**PHS 28B-1A28**
			B	–	30	108	160	75	29,44	30,29	**PHS 28B-1B28**
	30	425,24	A	30	–	–	–	–	–	25,17	**PHS 28B-1A30**
			B	–	30	108	160	75	29,44	32,73	**PHS 28B-1B30**
	32	453,49	A	30	–	–	–	–	–	31,02	**PHS 28B-1A32**
			B	–	30	134	180	75	29,44	34,84	**PHS 28B-1B32**
	38	538,27	A	30	–	–	–	–	–	48,58	**PHS 28B-1A38**
			B	–	30	134	180	75	29,44	51,25	**PHS 28B-1B38**
	40	566,54	A	30	–	–	–	–	–	52,80	**PHS 28B-1A40**
			C	–	30	134	180	75	29,44	52,84	**PHS 28B-1C40**
	42	594,81	A	30	–	–	–	–	–	57,02	**PHS 28B-1A42**
			C	–	30	134	180	90	29,44	54,43	**PHS 28B-1C42**
	45	637,22	A	30	–	–	–	–	–	63,35	**PHS 28B-1A45**
			C	–	30	134	180	90	29,44	60,55	**PHS 28B-1C45**
	48	679,63	A	30	–	–	–	–	–	69,68	**PHS 28B-1A48**
			C	–	30	134	180	90	29,44	62,72	**PHS 28B-1C48**
	54	764,47	A	30	–	–	–	–	–	82,34	**PHS 28B-1A54**
			C	–	30	134	180	100	29,44	74,60	**PHS 28B-1C54**
	57	806,89	A	40	–	–	–	–	–	88,67	**PHS 28B-1A57**
			C	–	30	134	180	100	29,44	81,77	**PHS 28B-1C57**
	60	849,32	A	40	–	–	–	–	–	97,97	**PHS 28B-1A60**
			C	–	30	134	180	100	29,44	88,94	**PHS 28B-1C60**
	68	962,47	A	40	–	–	–	–	–	122,79	**PHS 28B-1A68**
			C	–	30	137	180	100	29,44	108,05	**PHS 28B-1C68**
	72	1 019,04	A	40	–	–	–	–	–	135,19	**PHS 28B-1A72**
			C	–	30	137	180	100	29,44	117,61	**PHS 28B-1C72**
	76	1 075,62	A	40	–	–	–	–	–	147,60	**PHS 28B-1A76**
			C	–	30	137	180	100	29,44	127,17	**PHS 28B-1C76**
	95	1 344,39	A	40	–	–	–	–	–	206,53	**PHS 28B-1A95**
			C	–	30	137	180	100	29,44	172,57	**PHS 28B-1C95**
50,80	11	180,31	A	25	–	–	–	–	–	5,00	**PHS 32B-1A11**
			B	–	30	83	120	90	29,44	9,04	**PHS 32B-1BH11**
	12	196,28	A	25	–	–	–	–	–	6,02	**PHS 32B-1A12**
			B	–	30	89	133	90	29,44	11,11	**PHS 32B-1BH12**
	13	212,27	A	25	–	–	–	–	–	7,12	**PHS 32B-1A13**
			B	–	30	102	145	90	29,44	12,61	**PHS 32B-1BH13**
	14	228,29	A	30	–	–	–	–	–	8,32	**PHS 32B-1A14**
			B	–	30	102	145	90	29,44	14,97	**PHS 32B-1BH14**
	15	244,33	A	30	–	–	–	–	–	9,50	**PHS 32B-1A15**
			B	–	30	102	145	90	29,44	17,32	**PHS 32B-1BH15**
	16	260,39	A	30	–	–	–	–	–	11,64	**PHS 32B-1A16**
			B	–	30	103	160	90	29,44	18,78	**PHS 32B-1BH16**

Pitch	Number of teeth	Pitch diameter PD	Type	Dimensions Bore stock	Bore Min.	Bore Max.	Hub H	Hub L	Plate thickness t_1	Mass	Designation
mm	–	mm	–	mm						kg	–
50,80	17	276,46	A	30	–	–	–	–	–	12,35	**PHS 32B-1A17**
			B	–	30	103	160	90	29,44	20,23	**PHS 32B-1BH17**
	18	292,55	A	30	–	–	–	–	–	13,96	**PHS 32B-1A18**
			B	–	30	103	160	90	29,44	21,88	**PHS 32B-1BH18**
	19	308,64	A	30	–	–	–	–	–	15,57	**PHS 32B-1A19**
			B	–	30	103	160	90	29,44	23,53	**PHS 32B-1BH19**
	20	324,74	A	30	–	–	–	–	–	17,36	**PHS 32B-1A20**
			B	–	30	133	180	90	29,44	25,37	**PHS 32B-1BH20**
	21	340,84	A	30	–	–	–	–	–	19,15	**PHS 32B-1A21**
			B	–	30	133	180	90	29,44	27,20	**PHS 32B-1BH21**
	22	356,96	A	30	–	–	–	–	–	21,13	**PHS 32B-1A22**
			B	–	30	133	180	90	29,44	29,23	**PHS 32B-1BH22**
	23	373,07	A	30	–	–	–	–	–	23,10	**PHS 32B-1A23**
			B	–	30	133	180	90	29,44	31,25	**PHS 32B-1BH23**
	24	389,19	A	30	–	–	–	–	–	25,26	**PHS 32B-1A24**
			B	–	30	133	180	90	29,44	35,33	**PHS 32B-1BH24**
	25	405,32	A	30	–	–	–	–	–	27,41	**PHS 32B-1A25**
			B	–	30	133	180	90	29,44	36,80	**PHS 32B-1BH25**
	26	421,45	A	30	–	–	–	–	–	30,25	**PHS 32B-1A26**
			B	–	30	133	180	90	29,44	39,41	**PHS 32B-1B26**
	27	437,58	A	30	–	–	–	–	–	33,10	**PHS 32B-1A27**
			B	–	30	133	180	90	29,44	42,02	**PHS 32B-1B27**
	28	453,72	A	30	–	–	–	–	–	35,94	**PHS 32B-1A28**
			B	–	30	133	180	90	29,44	44,62	**PHS 32B-1B28**
	30	485,99	A	30	–	–	–	–	–	41,63	**PHS 32B-1A30**
			B	–	30	133	180	90	29,44	49,84	**PHS 32B-1B30**
	32	518,28	A	30	–	–	–	–	–	47,31	**PHS 32B-1A32**
			B	–	30	139	180	90	29,44	58,02	**PHS 32B-1B32**
	38	615,17	A	30	–	–	–	–	–	64,37	**PHS 32B-1A38**
			B	–	30	139	180	90	29,44	86,78	**PHS 32B-1B38**
	40	647,47	A	40	–	–	–	–	–	72,98	**PHS 32B-1A40**
			C	–	30	139	180	90	29,44	91,35	**PHS 32B-1C40**
	42	679,78	A	40	–	–	–	–	–	81,60	**PHS 32B-1A42**
			C	–	30	139	180	90	29,44	95,91	**PHS 32B-1C42**
	45	728,25	A	40	–	–	–	–	–	94,52	**PHS 32B-1A45**
			C	–	30	139	180	100	29,44	116,97	**PHS 32B-1C45**
	48	790,72	A	40	–	–	–	–	–	107,44	**PHS 32B-1A48**
			C	–	30	139	180	100	29,44	130,43	**PHS 32B-1C48**
	54	873,68	A	40	–	–	–	–	–	133,29	**PHS 32B-1A54**
			C	–	30	139	180	100	29,44	157,34	**PHS 32B-1C54**
	57	922,16	A	40	–	–	–	–	–	146,21	**PHS 32B-1A57**
			C	–	30	139	180	100	29,44	190,79	**PHS 32B-1C57**
	60	990,65	A	40	–	–	–	–	–	164,35	**PHS 32B-1A60**
			C	–	30	139	200	110	29,44	184,25	**PHS 32B-1C60**
	68	1 099,96	A	40	–	–	–	–	–	212,73	**PHS 32B-1A68**
			C	–	30	139	200	110	29,44	220,13	**PHS 32B-1C68**
	72	1 164,62	A	40	–	–	–	–	–	236,91	**PHS 32B-1A72**
			C	–	30	139	200	110	29,44	282,31	**PHS 32B-1C72**
	90	1 229,28	A	40	–	–	–	–	–	261,10	**PHS 32B-1A90**
			C	–	30	139	200	110	29,44	297,99	**PHS 32B-1C90**

Maximum bores can accommodate standard keyways. Larger bores are available where a shallow keyway is used or no keyway is required.
All Type B or C sprockets, up to and including 25 tooth, are with hardened teeth as standard.
For any additional size sprockets with hardened teeth, add "H" before the number of teeth, e.g. PHS 08B-1AH8.

Metric sprockets, simplex, taper bushed

ISO 06B-1 · 9,525 mm pitch | ISO 08B-1 · 12,70 mm pitch

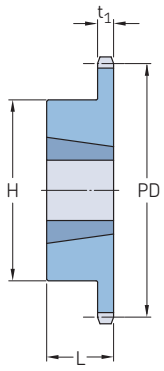

Type B

Pitch	Number of teeth	Pitch diameter	Type	Bushing number	Dimensions Bore				Plate thickness	Mass Rim	Bushing	Designation
		PD			Min.	Max.	L	H	t_1			
mm	–	mm	–	–	mm					kg		–
9,525	**16**	48,82	B	1008	9	25,4	22,0	42,0*	5,31	0,12	0,09	**PHS 06B-1TBH16**
	17	51,83	B	1008	9	25,4	22,0	45,0	5,31	0,13	0,09	**PHS 06B-1TBH17**
	18	54,85	B	1008	9	25,4	22,0	45,0	5,31	0,14	0,09	**PHS 06B-1TBH18**
	19	57,87	B	1008	9	25,4	22,0	45,0	5,31	0,16	0,09	**PHS 06B-1TBH19**
	20	60,89	B	1008	9	25,4	22,0	46,0	5,31	0,18	0,09	**PHS 06B-1TBH20**
	21	63,91	B	1008	9	25,4	22,0	46,0	5,31	0,20	0,09	**PHS 06B-1TBH21**
	22	66,93	B	1108	9	28,0	22,0	52,0	5,31	0,24	0,12	**PHS 06B-1TBH22**
	23	69,95	B	1210	11	31,8	25,0	63,0*	5,31	0,30	0,21	**PHS 06B-1TBH23**
	24	72,97	B	1210	11	31,8	25,0	63,0	5,31	0,32	0,21	**PHS 06B-1TBH24**
	25	76,00	B	1210	11	31,8	25,0	63,0	5,31	0,35	0,21	**PHS 06B-1TBH25**
	26	79,02	B	1210	11	31,8	25,0	63,0	5,31	0,35	0,21	**PHS 06B-1TB26**
	27	82,05	B	1210	11	31,8	25,0	63,0	5,31	0,38	0,21	**PHS 06B-1TB27**
	28	85,07	B	1210	11	31,8	25,0	63,0	5,31	0,38	0,21	**PHS 06B-1TB28**
	29	88,09	B	1210	11	31,8	25,0	63,0	5,31	0,40	0,21	**PHS 06B-1TB29**
	30	91,12	B	1210	11	31,8	25,0	63,0	5,31	0,41	0,21	**PHS 06B-1TB30**
	32	97,18	B	1210	11	31,8	25,0	63,0	5,31	0,58	0,21	**PHS 06B-1TB32**
	35	106,26	B	1210	11	31,8	25,0	63,0	5,31	0,76	0,21	**PHS 06B-1TB35**
	36	109,29	B	1210	11	31,8	25,0	63,0	5,31	0,82	0,21	**PHS 06B-1TB36**
	38	115,35	B	1210	11	31,8	25,0	70,0	5,31	0,94	0,21	**PHS 06B-1TB38**
	40	121,40	B	1210	11	31,8	25,0	70,0	5,31	1,06	0,21	**PHS 06B-1TB40**
	45	136,55	B	1210	11	31,8	25,0	70,0	5,31	1,36	0,21	**PHS 06B-1TB45**
	48	145,65	B	1210	11	31,8	25,0	70,0	5,31	1,54	0,21	**PHS 06B-1TB48**
	54	163,82	B	1210	11	31,8	25,0	70,0	5,31	1,90	0,21	**PHS 06B-1TB54**
	57	172,90	B	1210	11	31,8	25,0	70,0	5,31	1,60	0,21	**PHS 06B-1TB57**
	60	182,00	B	1210	11	31,8	25,0	70,0	5,31	2,26	0,21	**PHS 06B-1TB60**
	70	212,30	B	1210	11	31,8	25,0	70,0	5,31	2,86	0,21	**PHS 06B-1TB70**
	76	230,49	B	1210	11	31,8	25,0	70,0	5,31	2,43	0,21	**PHS 06B-1TB76**
	95	288,08	B	1210	11	31,8	25,0	110,0	5,31	2,72	0,21	**PHS 06B-1TB95**
	114	345,68	B	1215	11	31,8	25,0	110,0	5,31	5,50	0,31	**PHS 06B-1TB114**
12,70	**14**	57,07	B	1008	9	25,4	22,0	46,0*	7,37	0,12	0,14	**PHS 08B-1TBH14**
	15	61,09	B	1008	9	25,4	22,0	45,0	7,37	0,18	0,14	**PHS 08B-1TBH15**
	16	65,10	B	1108	9	28,0	22,0	52,0	7,37	0,24	0,16	**PHS 08B-1TBH16**
	17	69,11	B	1210	11	31,8	25,0	60,0*	7,37	0,24	0,27	**PHS 08B-1TBH17**
	18	73,14	B	1210	11	31,8	25,0	60,0*	7,37	0,30	0,27	**PHS 08B-1TBH18**
	19	77,16	B	1210	11	31,8	25,0	63,0	7,37	0,33	0,27	**PHS 08B-1TBH19**
	20	81,19	B	1610	11	31,8	25,0	71,0	7,37	0,32	0,41	**PHS 08B-1TBH20**
	21	85,22	B	1610	14	41,3	25,0	71,0	7,37	0,37	0,41	**PHS 08B-1TBH21**
	22	89,24	B	1610	14	41,3	25,0	76,0	7,37	0,50	0,41	**PHS 08B-1TBH22**
	23	93,27	B	1610	14	41,3	25,0	76,0	7,37	0,53	0,41	**PHS 08B-1TBH23**
	24	97,29	B	1610	14	41,3	25,0	76,0	7,37	0,54	0,41	**PHS 08B-1TBH24**
	25	101,33	B	1610	14	41,3	25,0	76,0	7,37	0,59	0,41	**PHS 08B-1TBH25**
	26	105,36	B	1610	14	41,3	25,0	76,0	7,37	0,61	0,41	**PHS 08B-1TB26**
	27	109,40	B	1610	14	41,3	25,0	76,0	7,37	0,94	0,41	**PHS 08B-1TB27**
	28	113,42	B	2012	14	50,8	25,0	90,0	7,37	0,86	0,77	**PHS 08B-1TB28**
	29	117,46	B	2012	14	50,8	25,0	90,0	7,37	0,90	0,77	**PHS 08B-1TB29**
	30	121,50	B	2012	14	50,8	32,0	90,0	7,37	0,94	0,59	**PHS 08B-1TB30**
	32	129,57	B	2012	14	50,8	32,0	90,0	7,37	1,12	0,59	**PHS 08B-1TB32**
	35	141,68	B	2012	14	50,8	32,0	90,0	7,37	1,30	0,59	**PHS 08B-1TB35**
	36	145,72	B	2012	14	50,8	32,0	90,0	7,37	1,48	0,59	**PHS 08B-1TB36**
	38	153,80	B	2012	14	50,8	32,0	90,0	7,37	1,67	0,59	**PHS 08B-1TB38**
	40	161,87	B	2012	14	50,8	32,0	90,0	7,37	1,80	0,59	**PHS 08B-1TB40**
	42	169,94	B	2012	14	50,8	32,0	100,0	7,37	1,93	0,59	**PHS 08B-1TB42**
	45	182,07	B	2012	14	50,8	32,0	100,0	7,37	2,06	0,59	**PHS 08B-1TB45**
	48	194,18	B	2012	14	50,8	32,0	100,0	7,37	2,36	0,59	**PHS 08B-1TB48**

* Undercut in hub for chain clearance
All Type B or C sprockets, up to and including 25 tooth, are with hardened teeth as standard.
For any additional size sprockets with hardened teeth, add "H" before the number of teeth, e.g. PHS 08B-1TBH16.

Metric sprockets, simplex, taper bushed

ISO 08B-1 · 12,70 mm pitch | ISO 10B-1 · 15,88 mm pitch | ISO 12B-1 · 19,05 mm pitch

Pitch	Number of teeth	Pitch diameter	Type	Bushing number	Dimensions Bore				Plate thickness	Mass Rim	Bushing	Designation
		PD			Min.	Max.	L	H	t_1			
mm	–	mm	–	–	mm					kg		–
12,70	**54**	218,42	B	2012	14	50,8	32,0	100,0	7,37	2,66	0,59	**PHS 08B-1TB54**
	57	230,53	B	2012	14	50,8	32,0	100,0	7,37	3,07	0,59	**PHS 08B-1TB57**
	60	242,66	B	2012	14	50,8	32,0	100,0	7,37	3,23	0,59	**PHS 08B-1TB60**
	70	283,07	B	2012	14	50,8	32,0	100,0	7,37	3,39	0,59	**PHS 08B-1TB70**
	72	291,15	B	2012	14	50,8	32,0	100,0	7,37	3,55	0,59	**PHS 08B-1TB72**
	76	307,31	B	2012	14	50,8	32,0	100,0	7,37	3,71	0,59	**PHS 08B-1TB76**
	80	323,49	B	2012	14	50,8	32,0	100,0	7,37	4,55	0,59	**PHS 08B-1TB80**
	84	339,65	B	2012	14	50,8	32,0	100,0	7,37	5,39	0,59	**PHS 08B-1TB84**
	95	384,10	B	2012	14	50,8	32,0	100,0	7,37	6,23	0,59	**PHS 08B-1TB95**
	96	388,15	B	2012	14	50,8	32,0	100,0	7,37	7,00	0,59	**PHS 08B-1TB96**
	114	460,90	B	2517	16	63,5	45,0	110,0	7,37	8,10	1,30	**PHS 08B-1TB114**
15,88	**12**	61,34	B	1008	9	25,4	22,0	49,2*	9,17	0,21	0,09	**PHS 10B-1TBH12**
	13	66,32	B	1008	9	25,4	22,0	47,0	9,17	0,25	0,09	**PHS 10B-1TBH13**
	14	71,34	B	1108	9	25,4	22,0	52,0	9,17	0,27	0,12	**PHS 10B-1TBH14**
	15	76,36	B	1210	11	31,8	25,0	60,0	9,17	0,33	0,21	**PHS 10B-1TBH15**
	16	81,37	B	1610	14	41,3	25,0	70,6*	9,17	0,32	0,31	**PHS 10B-1TBH16**
	17	86,39	B	1610	14	41,3	25,0	71,0*	9,17	0,40	0,31	**PHS 10B-1TBH17**
	18	91,42	B	1610	14	41,3	25,0	75,0	9,17	0,50	0,31	**PHS 10B-1TBH18**
	19	96,45	B	1610	14	41,3	25,0	75,0	9,17	0,56	0,31	**PHS 10B-1TBH19**
	20	101,49	B	1610	14	41,3	25,0	76,0	9,17	0,64	0,31	**PHS 10B-1TBH20**
	21	106,52	B	1610	14	41,3	25,0	76,0	9,17	0,69	0,31	**PHS 10B-1TBH21**
	22	111,55	B	1610	14	41,3	25,0	76,0	9,17	0,75	0,31	**PHS 10B-1TBH22**
	23	116,58	B	1610	14	41,3	25,0	76,0	9,17	0,81	0,31	**PHS 10B-1TBH23**
	24	121,62	B	2012	14	50,8	32,0	90,0	9,17	1,00	0,59	**PHS 10B-1TBH24**
	25	126,66	B	2012	14	50,8	32,0	90,0	9,17	1,06	0,59	**PHS 10B-1TBH25**
	26	131,70	B	2012	14	50,8	32,0	90,0	9,17	1,14	0,59	**PHS 10B-1TB26**
	27	136,75	B	2012	14	50,8	32,0	90,0	9,17	1,19	0,59	**PHS 10B-1TB27**
	28	141,78	B	2012	14	50,8	32,0	90,0	9,17	1,28	0,59	**PHS 10B-1TB28**
	29	146,83	B	2012	14	50,8	32,0	90,0	9,17	1,37	0,59	**PHS 10B-1TB29**
	30	151,87	B	2012	14	50,8	32,0	90,0	9,17	1,65	0,59	**PHS 10B-1TB30**
	32	161,96	B	2012	14	50,8	32,0	98,0	9,17	2,21	0,59	**PHS 10B-1TB32**
	35	177,10	B	2012	14	50,8	32,0	98,0	9,17	3,05	0,59	**PHS 10B-1TB35**
	36	182,15	B	2012	14	50,8	32,0	98,0	9,17	3,33	0,59	**PHS 10B-1TB36**
	38	192,24	B	2012	14	50,8	32,0	100,0	9,17	3,89	0,59	**PHS 10B-1TB38**
	40	202,33	B	2012	14	50,8	32,0	100,0	9,17	4,45	0,59	**PHS 10B-1TB40**
	42	212,43	B	2012	14	50,8	32,0	100,0	9,17	5,01	0,59	**PHS 10B-1TB42**
	45	227,58	B	2012	14	50,8	32,0	100,0	9,17	3,97	0,59	**PHS 10B-1TB45**
	48	242,73	B	2012	14	50,8	32,0	100,0	9,17	6,69	0,59	**PHS 10B-1TB48**
	54	273,03	B	2012	14	50,8	32,0	100,0	9,17	8,37	0,59	**PHS 10B-1TB54**
	57	288,19	B	2012	14	50,8	32,0	100,0	9,17	5,45	0,59	**PHS 10B-1TB57**
	60	303,33	B	2012	14	50,8	32,0	100,0	9,17	10,05	0,59	**PHS 10B-1TB60**
	70	353,84	B	2012	16	63,5	45,0	100,0	9,17	12,85	1,30	**PHS 10B-1TB70**
	72	363,95	B	2012	16	63,5	45,0	100,0	9,17	13,41	1,30	**PHS 10B-1TB72**
	76	384,15	B	2012	14	50,8	45,0	100,0	9,17	7,43	0,59	**PHS 10B-1TB76**
	80	404,35	B	2012	16	63,5	45,0	110,0	9,17	15,65	1,30	**PHS 10B-1TB80**
	84	424,70	B	2012	16	63,5	45,0	110,0	9,17	16,77	1,30	**PHS 10B-1TB84**
	95	480,14	B	2517	14	50,8	45,0	110,0	9,17	19,85	0,59	**PHS 10B-1TB95**
	96	485,30	B	2517	16	63,5	45,0	110,0	9,17	20,13	1,30	**PHS 10B-1TB96**
	114	576,13	B	2517	16	63,5	45,0	110,0	9,17	25,17	1,30	**PHS 10B-1TB114**
19,05	**11**	67,61	B	1008	9	25,4	22,0	46,0	11,10	0,22	0,09	**PHS 12B-1TBH11**
	12	73,61	B	1008	9	25,4	22,0	49,2	11,10	0,30	0,09	**PHS 12B-1TBH12**
	13	79,59	B	1210	11	31,8	25,0	60,0	11,10	0,38	0,21	**PHS 12B-1TBH13**
	14	85,61	B	1610	14	41,3	25,0	70,0	11,10	0,46	0,31	**PHS 12B-1TBH14**
	15	91,63	B	1610	14	41,3	25,0	70,0	11,10	0,48	0,31	**PHS 12B-1TBH15**
	16	97,65	B	1610	14	41,3	25,0	75,0	11,10	0,60	0,31	**PHS 12B-1TBH16**
	17	103,67	B	1610	14	41,3	25,0	76,0	11,10	0,70	0,31	**PHS 12B-1TBH17**
	18	109,71	B	2012	14	50,8	32,0	90,0	11,10	0,86	0,59	**PHS 12B-1TBH18**
	19	115,75	B	2012	14	50,8	32,0	90,0	11,10	0,98	0,59	**PHS 12B-1TBH19**
	20	121,78	B	2012	14	50,8	32,0	95,0	11,10	1,25	0,59	**PHS 12B-1TBH20**
	21	127,82	B	2517	16	63,5	45,0	102,0	11,10	1,28	1,30	**PHS 12B-1TBH21**
	22	133,86	B	2517	16	63,5	45,0	102,0	11,10	1,37	1,30	**PHS 12B-1TBH22**
	23	139,90	B	2517	16	63,5	45,0	108,0	11,10	1,75	1,30	**PHS 12B-1TBH23**
	24	145,94	B	2517	16	63,5	45,0	108,0	11,10	1,85	1,30	**PHS 12B-1TBH24**
	25	152,00	B	2517	16	63,5	45,0	108,0	11,10	1,95	1,30	**PHS 12B-1TBH25**
	26	158,04	B	2517	16	63,5	45,0	108,0	11,10	2,09	1,30	**PHS 12B-1TB26**
	27	164,09	B	2517	16	63,5	45,0	108,0	11,10	2,22	1,30	**PHS 12B-1TB27**
	28	170,13	B	2517	16	63,5	45,0	108,0	11,10	2,36	1,30	**PHS 12B-1TB28**
	29	176,19	B	2517	16	63,5	45,0	108,0	11,10	2,75	1,30	**PHS 12B-1TB29**
	30	182,25	B	2517	16	63,5	45,0	108,0	11,10	2,89	1,30	**PHS 12B-1TB30**
	32	194,36	B	2517	16	63,5	45,0	108,0	11,10	3,59	1,30	**PHS 12B-1TB32**
	35	212,52	B	2517	16	63,5	45,0	108,0	11,10	4,41	1,30	**PHS 12B-1TB35**
	36	218,58	B	2517	16	63,5	45,0	108,0	11,10	4,68	1,30	**PHS 12B-1TB36**
	38	230,69	B	2517	16	63,5	45,0	108,0	11,10	4,60	1,30	**PHS 12B-1TB38**

* Undercut in hub for chain clearance
All Type B or C sprockets, up to and including 25 tooth, are with hardened teeth as standard.
For any additional size sprockets with hardened teeth, add "H" before the number of teeth, e.g. PHS 08B-1TBH16.

Metric sprockets, simplex, taper bushed

ISO 12B-1 · 19,05 mm pitch | ISO 16B-1 · 25,40 mm pitch

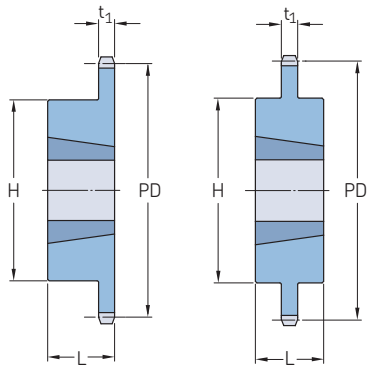

Type B Type C

Pitch	Number of teeth	Pitch diameter	Type	Bushing number	Dimensions Bore				Plate thickness	Mass Rim	Bushing	Designation
		PD			Min.	Max.	L	H	t_1			
mm	–	mm	–	–	mm					kg		–
19,05	**40**	242,81	B	2517	16	63,5	45,0	108,0	11,10	5,78	1,30	**PHS 12B-1TB40**
	42	254,93	B	2517	16	63,5	45,0	108,0	11,10	6,33	1,30	**PHS 12B-1TB42**
	45	273,10	B	2517	16	63,5	45,0	108,0	11,10	5,70	1,30	**PHS 12B-1TB45**
	48	291,27	B	2517	16	63,5	45,0	108,0	11,10	7,97	1,30	**PHS 12B-1TB48**
	54	327,64	B	2517	16	63,5	45,0	108,0	11,10	9,61	1,30	**PHS 12B-1TB54**
	57	345,81	B	2517	16	63,5	45,0	108,0	11,10	6,49	1,30	**PHS 12B-1TB57**
	60	363,99	B	2517	16	63,5	45,0	108,0	11,10	11,25	1,30	**PHS 12B-1TB60**
	68	412,49	B	2517	16	63,5	45,0	108,0	11,10	13,44	1,30	**PHS 12B-1TB68**
	70	424,60	B	2517	16	63,5	45,0	108,0	11,10	13,99	1,30	**PHS 12B-1TB70**
	72	436,74	B	2517	16	63,5	45,0	108,0	11,10	14,54	1,30	**PHS 12B-1TB72**
	76	460,99	B	2517	16	63,5	45,0	108,0	11,10	11,20	1,30	**PHS 12B-1TB76**
	84	509,48	B	2517	16	63,5	45,0	108,0	11,10	17,82	1,30	**PHS 12B-1TB84**
	95	576,17	B	2517	16	63,5	45,0	108,0	11,10	17,64	1,30	**PHS 12B-1TB95**
	96	582,23	B	2517	16	63,5	45,0	108,0	11,10	21,11	1,30	**PHS 12B-1TB96**
	114	691,36	B	2517	16	63,5	64,0	108,0	11,10	26,04	1,30	**PHS 12B-1TB114**
25,40	**10**	82,19	B	1215	11	31,8	38,0	62,7	16,18	0,34	0,30	**PHS 16B-1TBH10**
	11	90,14	B	1215	11	31,8	38,0	62,7	16,18	0,57	0,30	**PHS 16B-1TBH11**
	12	98,14	B	1615	14	41,3	38,0	76,2	16,18	0,81	0,43	**PHS 16B-1TBH12**
	13	106,12	B	1615	14	41,3	38,0	73,0	16,18	1,03	0,43	**PHS 16B-1TBH13**
	14	114,15	B	1615	14	41,3	38,0	78,0	16,18	1,26	0,43	**PHS 16B-1TBH14**
	15	122,17	B	1615	14	41,3	38,0	76,0	16,18	1,40	0,43	**PHS 16B-1TBH15**
	16	130,20	B	2012	14	50,8	32,0	90,0	16,18	1,42	0,59	**PHS 16B-1TBH16**
	17	138,22	B	2012	14	50,8	32,0	90,0	16,18	1,60	0,59	**PHS 16B-1TBH17**
	18	146,28	B	2517	16	63,5	45,0	108,0	16,18	2,09	1,30	**PHS 16B-1TBH18**
	19	154,33	B	2517	16	63,5	45,0	108,0	16,18	2,30	1,30	**PHS 16B-1TBH19**
	20	162,38	B	2517	16	63,5	45,0	110,0	16,18	2,56	1,30	**PHS 16B-1TBH20**
	21	170,43	B	2517	16	63,5	45,0	110,0	16,18	2,80	1,30	**PHS 16B-1TBH21**
	22	178,48	B	2517	16	63,5	45,0	110,0	16,18	3,36	1,30	**PHS 16B-1TBH22**
	23	186,53	B	2517	16	63,5	45,0	110,0	16,18	3,34	1,30	**PHS 16B-1TBH23**
	24	194,59	B	2517	16	63,5	45,0	110,0	16,18	3,66	1,30	**PHS 16B-1TBH24**
	25	202,66	B	2517	16	63,5	45,0	110,0	16,18	3,96	1,30	**PHS 16B-1TBH25**
	26	210,72	B	2517	16	63,5	45,0	110,0	16,18	4,26	1,30	**PHS 16B-1TB26**
	27	218,79	B	2517	16	63,5	45,0	110,0	16,18	4,63	1,30	**PHS 16B-1TB27**
	28	226,85	B	2517	16	63,5	45,0	140,0	16,18	4,97	1,30	**PHS 16B-1TB28**
	29	234,92	B	3020	25	76,2	51,0	140,0	16,18	6,24	2,24	**PHS 16B-1TB29**
	30	243,00	B	3020	25	76,2	51,0	140,0	16,18	6,67	2,24	**PHS 16B-1TB30**
	32	259,13	B	3020	25	76,2	51,0	140,0	16,18	8,37	2,24	**PHS 16B-1TB32**
	35	283,36	B	3020	25	76,2	51,0	140,0	16,18	10,92	2,24	**PHS 16B-1TB35**
	36	291,44	B	3020	25	76,2	51,0	140,0	16,18	11,77	2,24	**PHS 16B-1TB36**
	38	307,59	B	3020	25	76,2	51,0	140,0	16,18	9,49	2,24	**PHS 16B-1TB38**
	40	323,75	B	3020	25	76,2	51,0	140,0	16,18	15,17	2,24	**PHS 16B-1TB40**
	45	364,13	B	3020	25	76,2	51,0	140,0	16,18	11,70	2,24	**PHS 16B-1TB45**
	48	388,36	B	3020	25	76,2	51,0	140,0	16,18	18,91	2,24	**PHS 16B-1TB48**
	54	436,85	B	3020	25	76,2	51,0	140,0	16,18	21,72	2,24	**PHS 16B-1TB54**
	57	461,07	B	3020	25	76,2	51,0	140,0	16,18	15,00	2,24	**PHS 16B-1TB57**
	60	485,32	B	3020	25	76,2	51,0	140,0	16,18	24,52	2,24	**PHS 16B-1TB60**
	64	517,65	B	3020	25	76,2	51,0	140,0	16,18	26,39	2,24	**PHS 16B-1TB64**
	70	566,14	B	3020	25	76,2	51,0	140,0	16,18	29,20	2,24	**PHS 16B-1TB70**
	76	614,65	B	3020	25	76,2	51,0	140,0	16,18	23,00	2,24	**PHS 16B-1TB76**
	80	646,96	B	3020	25	76,2	51,0	140,0	16,18	33,87	2,24	**PHS 16B-1TB80**
	84	679,30	B	3020	25	76,2	51,0	140,0	16,18	35,74	2,24	**PHS 16B-1TB84**
	95	768,22	B	3020	25	76,2	51,0	140,0	16,18	40,88	2,24	**PHS 16B-1TB95**
	114	921,81	B	3020	25	76,2	76,0	140,0	16,18	49,77	2,24	**PHS 16B-1TB114**

* Undercut in hub for chain clearance
All Type B or C sprockets, up to and including 25 tooth, are with hardened teeth as standard.
For any additional size sprockets with hardened teeth, add "H" before the number of teeth, e.g. PHS 08B-1TBH16.

Metric sprockets, simplex, taper bushed

ISO 20B-1 · 31,75 mm pitch | ISO 24B-1 · 38,10 mm pitch | ISO 28B-1 · 44,45 mm pitch

Pitch	Number of teeth	Pitch diameter	Type	Bushing number	Dimensions Bore				Plate thickness	Mass Rim	Bushing	Designation
		PD			Min.	Max.	L	H	t_1			
mm	–	mm	–	–	mm					kg		–
31,75	**11**	112,70	B	1615	14	41,3	38,0	62,7	18,59	1,22	0,43	**PHS 20B-1TBH11**
	12	122,67	B	1615	14	41,3	38,0	70,6	18,59	1,41	0,43	**PHS 20B-1TBH12**
	13	132,67	B	2012	14	50,8	32,0	90,0	18,59	1,45	0,59	**PHS 20B-1TBH13**
	14	142,68	B	2012	14	50,8	32,0	90,5	18,59	1,63	0,59	**PHS 20B-1TBH14**
	15	152,71	B	2517	16	63,5	45,0	108,0	18,59	2,31	1,30	**PHS 20B-1TBH15**
	16	162,75	B	2517	16	63,5	45,0	108,0	18,59	2,72	1,30	**PHS 20B-1TBH16**
	17	172,79	B	2517	16	63,5	45,0	108,0	18,59	3,27	1,30	**PHS 20B-1TBH17**
	18	182,84	B	2517	16	63,5	45,0	108,0	18,59	3,63	1,30	**PHS 20B-1TBH18**
	19	192,90	B	2517	16	63,5	45,0	108,0	18,59	4,09	1,30	**PHS 20B-1TBH19**
	20	202,96	B	2517	16	63,5	45,0	108,0	18,59	4,40	1,30	**PHS 20B-1TBH20**
	21	213,03	B	2517	16	63,5	45,0	108,0	18,59	4,54	1,30	**PHS 20B-1TBH21**
	22	223,10	B	2517	16	63,5	45,0	108,0	18,59	4,77	1,30	**PHS 20B-1TBH22**
	23	233,17	B	2517	16	63,5	45,0	108,0	18,59	5,58	1,30	**PHS 20B-1TBH23**
	24	243,25	B	2517	16	63,5	45,0	108,0	18,59	6,13	1,30	**PHS 20B-1TBH24**
	25	253,32	B	2517	16	63,5	45,0	108,0	18,59	6,95	1,30	**PHS 20B-1TBH25**
	26	263,41	B	2517	16	63,5	51,0	108,0	18,59	7,35	1,30	**PHS 20B-1TB26**
	28	283,57	B	3020	25	76,2	51,0	150,0	18,59	7,90	2,24	**PHS 20B-1TB28**
	30	303,75	B	3020	25	76,2	51,0	150,0	18,59	9,62	2,24	**PHS 20B-1TB30**
	32	323,92	B	3020	25	76,2	51,0	160,0	18,59	11,03	2,24	**PHS 20B-1TB32**
	35	354,20	B	3020	25	76,2	51,0	160,0	18,59	13,15	2,24	**PHS 20B-1TB35**
	36	364,29	B	3020	25	76,2	51,0	160,0	18,59	13,86	2,24	**PHS 20B-1TB36**
	38	384,48	B	3020	25	76,2	51,0	160,0	18,59	15,98	2,24	**PHS 20B-1TB38**
	40	404,67	B	3020	25	76,2	51,0	160,0	18,59	19,43	2,24	**PHS 20B-1TB40**
	45	455,15	B	3020	25	76,2	51,0	160,0	18,59	25,18	2,24	**PHS 20B-1TB45**
	48	485,45	B	3020	25	76,2	51,0	160,0	18,59	28,62	2,24	**PHS 20B-1TB48**
	54	546,05	B	3020	25	76,2	51,0	160,0	18,59	35,52	2,24	**PHS 20B-1TB54**
	57	576,35	B	3020	25	76,2	51,0	160,0	18,59	37,82	2,24	**PHS 20B-1TB57**
	60	606,66	B	3020	25	76,2	51,0	160,0	18,59	41,27	2,24	**PHS 20B-1TB60**
	70	707,68	C	3535	35	88,9	51,0	160,0	24,13	51,56	5,18	**PHS 20B-1TB70**
	72	727,89	C	3535	35	88,9	51,0	160,0	24,13	53,97	5,18	**PHS 20B-1TB72**
	76	768,30	C	3535	35	88,9	51,0	160,0	24,13	60,33	5,18	**PHS 20B-1TB76**
	80	808,71	C	3535	35	88,9	51,0	160,0	24,13	66,23	5,18	**PHS 20B-1TB80**
	84	849,13	C	3535	35	88,9	51,0	160,0	24,13	73,48	5,18	**PHS 20B-1TB84**
	90	909,76	C	3535	35	88,9	51,0	160,0	24,13	94,33	5,18	**PHS 20B-1TB90**
	95	960,28	C	3535	35	88,9	51,0	160,0	24,13	96,16	5,18	**PHS 20B-1TB95**
38,10	**11**	135,23	B	2012	14	50,8	31,8	90,5	24,13	2,28	0,59	**PHS 24B-1TBH11**
	12	147,21	B	2012	14	50,8	31,8	90,5	24,13	2,49	0,59	**PHS 24B-1TBH12**
	13	159,20	B	2517	16	63,5	44,5	107,9	24,13	2,77	1,30	**PHS 24B-1TBH13**
	14	171,22	B	2517	16	63,5	44,5	107,9	24,13	3,54	1,30	**PHS 24B-1TBH14**
	15	183,25	B	2517	16	63,5	44,5	107,9	24,13	4,31	1,30	**PHS 24B-1TBH15**
	16	195,29	B	3020	25	76,2	50,8	133,4	24,13	4,77	2,24	**PHS 24B-1TBH16**
	17	207,35	B	3020	25	76,2	50,8	133,4	24,13	5,45	2,24	**PHS 24B-1TBH17**
	18	219,41	B	3020	25	76,2	50,8	133,4	24,13	6,13	2,24	**PHS 24B-1TBH18**
	19	231,48	B	3020	25	76,2	50,8	133,4	24,13	6,81	2,24	**PHS 24B-1TBH19**
	20	243,55	B	3020	25	76,2	50,8	133,4	24,13	7,49	2,24	**PHS 24B-1TBH20**
	21	255,63	B	3020	25	76,2	50,8	133,4	24,13	7,94	2,24	**PHS 24B-1TBH21**
	22	267,72	B	3020	25	76,2	50,8	133,4	24,13	8,75	2,24	**PHS 24B-1TBH22**
	23	279,80	B	3020	25	76,2	50,8	133,4	24,13	9,53	2,24	**PHS 24B-1TBH23**
	24	291,90	B	3020	25	76,2	50,8	133,4	24,13	10,67	2,24	**PHS 24B-1TBH24**
	25	303,99	B	3020	25	76,2	50,8	133,4	24,13	11,80	2,24	**PHS 24B-1TBH25**
	26	316,09	B	3020	25	76,2	50,8	133,4	24,13	12,93	2,24	**PHS 24B-1TB26**
	27	328,19	B	3020	25	76,2	50,8	133,4	24,13	13,50	2,24	**PHS 24B-1TB27**
	28	340,29	B	3020	25	76,2	50,8	133,4	24,13	14,70	2,24	**PHS 24B-1TB28**
	29	352,29	B	3020	25	76,2	50,8	133,4	24,13	14,75	2,24	**PHS 24B-1TB29**
	30	364,49	B	3020	25	76,2	50,8	133,4	24,13	15,20	2,24	**PHS 24B-1TB30**
	32	388,71	B	3020	25	76,2	50,8	133,4	24,13	15,76	2,24	**PHS 24B-1TB32**
	38	461,37	B	3030	35	76,2	76,2	139,7	24,13	24,97	3,04	**PHS 24B-1TB38**
	40	485,60	C	3030	35	76,2	76,2	139,7	24,13	28,46	3,04	**PHS 24B-1TB40**
	42	509,83	C	3030	35	76,2	76,2	139,7	24,13	31,95	3,04	**PHS 24B-1TB42**
	45	546,19	C	3030	35	76,2	76,2	139,7	24,13	37,19	3,04	**PHS 24B-1TB45**
	48	582,54	C	3030	35	76,2	76,2	139,7	24,13	42,43	3,04	**PHS 24B-1TB48**
	50	606,78	C	3030	35	76,2	76,2	139,7	24,13	45,92	3,04	**PHS 24B-1TB50**
	54	655,26	C	3535	35	88,9	88,9	165,1	24,13	63,32	5,18	**PHS 24B-1TB54**
	57	691,62	C	3535	35	88,9	88,9	165,1	24,13	71,46	5,18	**PHS 24B-1TB57**
	60	727,99	C	3535	35	88,9	88,9	165,1	24,13	79,60	5,18	**PHS 24B-1TB60**
	68	824,97	C	3535	35	88,9	88,9	165,1	24,13	101,31	5,18	**PHS 24B-1TB68**
	72	873,46	C	3535	35	88,9	88,9	165,1	24,13	112,17	5,18	**PHS 24B-1TB72**
	76	921,96	C	3535	35	88,9	88,9	165,1	24,13	123,02	5,18	**PHS 24B-1TB76**
	95	1 152,33	C	4040	40	101,6	101,6	196,9	24,13	196,67	8,27	**PHS 24B-1TB95**
	96	1 164,46	C	4040	40	101,6	101,6	196,9	24,13	201,03	8,27	**PHS 24B-1TB96**
	114	1 382,72	C	4040	40	101,6	101,6	196,9	24,13	279,50	8,27	**PHS 24B-1TB114**
44,45	**11**	157,77	B	2517	16	63,5	44,5	107,9	29,44	3,53	1,30	**PHS 28B-1TBH11**
	12	171,74	B	2517	16	63,5	44,5	107,9	29,44	3,86	1,30	**PHS 28B-1TBH12**

* Undercut in hub for chain clearance
All Type B or C sprockets, up to and including 25 tooth, are with hardened teeth as standard.
For any additional size sprockets with hardened teeth, add "H" before the number of teeth, e.g. PHS 08B-1TBH16.

Metric sprockets, simplex, taper bushed

ISO 28B-1 · 44,45 mm pitch | ISO 32B-1 · 50,80 mm pitch

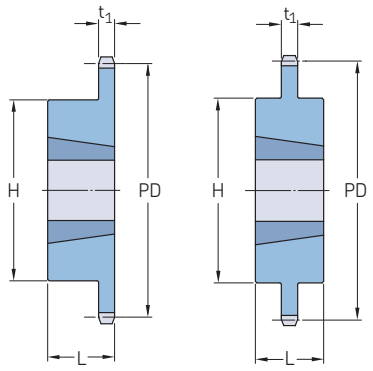

Type B Type C

Pitch	Number of teeth	Pitch diameter	Type	Bushing number	Dimensions Bore				Plate thickness	Mass Rim	Bushing	Designation
		PD			Min.	Max.	L	H	t_1			
mm	–	mm	–	–	mm					kg		–
44,45	**13**	185,75	B	3020	25	76,2	50,8	133,4	29,44	5,90	2,24	**PHS 28B-1TBH13**
	14	199,76	B	3020	25	76,2	50,8	133,4	29,44	7,04	2,24	**PHS 28B-1TBH14**
	15	213,79	B	3020	25	76,2	50,8	133,4	29,44	8,17	2,24	**PHS 28B-1TBH15**
	16	227,84	B	3020	25	76,2	50,8	133,4	29,44	9,76	2,24	**PHS 28B-1TBH16**
	17	241,91	B	3020	25	76,2	50,8	133,4	29,44	11,35	2,24	**PHS 28B-1TBH17**
	18	255,98	B	3020	25	76,2	50,8	133,4	29,44	12,49	2,24	**PHS 28B-1TBH18**
	19	270,06	B	3020	25	76,2	50,8	133,4	29,44	13,62	2,24	**PHS 28B-1TBH19**
	20	284,15	B	3020	25	76,2	50,8	133,4	29,44	14,30	2,24	**PHS 28B-1TBH20**
	21	298,24	B	3020	25	76,2	50,8	133,4	29,44	14,98	2,24	**PHS 28B-1TBH21**
	22	312,34	B	3020	25	76,2	50,8	133,4	29,44	16,91	2,24	**PHS 28B-1TBH22**
	23	326,44	B	3020	25	76,2	50,8	133,4	29,44	18,84	2,24	**PHS 28B-1TBH23**
	24	340,55	B	3020	25	76,2	50,8	133,4	29,44	20,77	2,24	**PHS 28B-1TBH24**
	25	354,66	B	3020	25	76,2	50,8	133,4	29,44	22,70	2,24	**PHS 28B-1TBH25**
	26	368,77	B	3020	25	76,2	50,8	133,4	29,44	24,63	2,24	**PHS 28B-1TB26**
	27	382,88	B	3020	25	76,2	50,8	133,4	29,44	26,56	2,24	**PHS 28B-1TB27**
	28	397,00	B	3020	25	76,2	50,8	133,4	29,44	28,49	2,24	**PHS 28B-1TB28**
	30	425,24	B	3020	25	76,2	50,8	133,4	29,44	32,35	2,24	**PHS 28B-1TB30**
	32	453,49	B	3020	25	76,2	50,8	133,4	29,44	36,21	2,24	**PHS 28B-1TB32**
	38	538,27	B	3535	35	88,9	88,9	165,1	29,44	45,40	3,56	**PHS 28B-1TB38**
	40	566,54	C	3535	35	88,9	88,9	165,1	29,44	47,79	3,56	**PHS 28B-1TB40**
	42	594,82	C	3535	35	88,9	88,9	165,1	29,44	50,18	3,56	**PHS 28B-1TB42**
	45	637,22	C	4040	40	101,6	101,6	219,1	29,44	57,35	8,27	**PHS 28B-1TB45**
	48	679,63	C	4040	40	101,6	101,6	219,1	29,44	61,17	8,27	**PHS 28B-1TB48**
	54	764,46	C	4040	40	101,6	101,6	219,1	29,44	68,82	8,27	**PHS 28B-1TB54**
	57	806,90	C	4040	40	101,6	101,6	219,1	29,44	72,64	8,27	**PHS 28B-1TB57**
	60	849,32	C	4040	40	101,6	101,6	219,1	29,44	76,44	8,27	**PHS 28B-1TB60**
	68	962,46	C	4040	40	101,6	101,6	219,1	29,44	86,63	8,27	**PHS 28B-1TB68**
	72	1 019,05	C	4040	40	101,6	101,6	219,1	29,44	91,73	8,27	**PHS 28B-1TB72**
	76	1 075,62	C	4040	40	101,6	101,6	219,1	29,44	96,83	8,27	**PHS 28B-1TB76**
	95	1 344,37	C	4040	40	101,6	101,6	219,1	29,44	121,03	8,27	**PHS 28B-1TB95**
50,80	**11**	180,34	B	2517	16	63,5	44,5	107,9	29,44	4,51	1,30	**PHS 32B-1TBH11**
	12	196,29	B	3020	25	76,2	50,8	133,4	29,44	5,27	2,24	**PHS 32B-1TBH12**
	13	212,29	B	3020	25	76,2	50,8	133,4	29,44	6,38	2,24	**PHS 32B-1TBH13**
	14	228,29	B	3020	25	76,2	50,8	133,4	29,44	6,87	2,24	**PHS 32B-1TBH14**
	15	244,30	B	3535	35	88,9	88,9	165,1	29,44	11,80	5,18	**PHS 32B-1TBH15**
	16	260,40	B	3535	35	88,9	88,9	165,1	29,44	13,38	5,18	**PHS 32B-1TBH16**
	17	276,40	B	3535	35	88,9	88,9	165,1	29,44	14,98	5,18	**PHS 32B-1TBH17**
	18	292,55	B	3535	35	88,9	88,9	165,1	29,44	16,12	5,18	**PHS 32B-1TBH18**
	19	308,66	B	3535	35	88,9	88,9	165,1	29,44	17,25	5,18	**PHS 32B-1TBH19**
	20	324,71	B	3535	35	88,9	88,9	165,1	29,44	21,10	5,18	**PHS 32B-1TBH20**
	21	340,82	B	3535	35	88,9	88,9	165,1	29,44	24,94	5,18	**PHS 32B-1TBH21**
	22	356,98	B	3535	35	88,9	88,9	165,1	29,44	27,79	5,18	**PHS 32B-1TBH22**
	23	373,08	B	3535	35	88,9	88,9	165,1	29,44	30,64	5,18	**PHS 32B-1TBH23**
	24	389,18	B	3535	35	88,9	88,9	165,1	29,44	33,48	5,18	**PHS 32B-1TBH24**
	25	405,33	B	3535	35	88,9	88,9	165,1	29,44	36,32	5,18	**PHS 32B-1TBH25**
	26	421,44	B	3535	35	88,9	88,9	165,1	29,44	39,16	5,18	**PHS 32B-1TB26**
	27	437,59	B	3535	35	88,9	88,9	165,1	29,44	42,00	5,18	**PHS 32B-1TB27**
	28	453,69	B	3535	35	88,9	88,9	165,1	29,44	44,84	5,18	**PHS 32B-1TB28**
	30	486,00	B	3535	35	88,9	88,9	165,1	29,44	50,52	5,18	**PHS 32B-1TB30**
	32	518,26	B	3535	35	88,9	88,9	165,1	29,44	56,20	5,18	**PHS 32B-1TB32**
	38	615,14	B	4040	40	101,6	101,6	219,1	29,44	68,10	8,27	**PHS 32B-1TB38**
	40	647,49	C	4040	40	101,6	101,6	219,1	29,44	77,08	8,27	**PHS 32B-1TB40**
	45	728,26	C	4040	40	101,6	101,6	219,1	29,44	99,53	8,27	**PHS 32B-1TB45**
	48	776,72	C	4040	40	101,6	101,6	219,1	29,44	113,01	8,27	**PHS 32B-1TB48**

* Undercut in hub for chain clearance
All Type B or C sprockets, up to and including 25 tooth, are with hardened teeth as standard.
For any additional size sprockets with hardened teeth, add "H" before the number of teeth, e.g. PHS 08B-1TBH16.

Metric sprockets, simplex, taper bushed

ISO 32B-1 · 50,80 mm pitch

Pitch	Number of teeth	Pitch diameter	Type	Bushing number	Dimensions Bore				Plate thickness	Mass Rim	Bushing	Designation
		PD			Min.	Max.	L	H	t_1			
mm	–	mm	–	–	mm					kg		–
50,80	**54**	873,68	C	4040	40	101,6	114,3	219,1	29,44	139,95	8,27	**PHS 32B-1TB54**
	57	922,17	C	4545	55	114,3	114,3	247,7	29,44	136,20	9,99	**PHS 32B-1TB57**
	60	970,63	C	4545	55	114,3	114,3	247,7	29,44	158,84	9,99	**PHS 32B-1TB60**
	64	1 035,30	C	4545	55	114,3	114,3	247,7	29,44	189,03	9,99	**PHS 32B-1TB64**
	70	1 132,29	C	4545	55	114,3	114,3	247,7	29,44	234,32	9,99	**PHS 32B-1TB70**

* Undercut in hub for chain clearance
All Type B or C sprockets, up to and including 25 tooth, are with hardened teeth as standard.
For any additional size sprockets with hardened teeth, add "H" before the number of teeth, e.g. PHS 08B-1TBH16.

Metric sprockets, double simplex, pilot bore

ISO 06B-1 · 9,525 mm pitch | ISO 08B-1 · 12,70 mm pitch | ISO 10B-1 · 15,88 mm pitch | ISO 12B-1 · 19,05 mm pitch

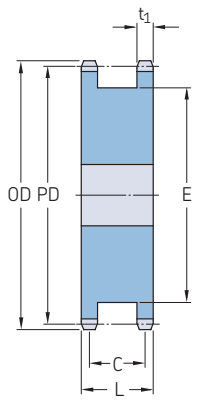

Type A

Pitch	Number of teeth	Diameters Outside OD	Pitch PD	Type	Dimensions Bore Min.	Max.	L	C	E	Plate thickness t_1	Mass	Designation
mm	–	mm		–	mm						kg	–
9,525	**14**	46,30	42,80	A	10	20,00	25,5	20,3	31	9,52	0,17	**PHS 06B-1DSA14**
	15	49,30	45,81	A	10	23,00	25,5	20,3	34	9,52	0,20	**PHS 06B-1DSA15**
	16	52,30	48,82	A	10	25,00	25,5	20,3	37	9,52	0,23	**PHS 06B-1DSA16**
	17	55,30	51,83	A	12	27,00	25,5	20,3	40	9,52	0,27	**PHS 06B-1DSA17**
	18	58,30	54,85	A	12	29,00	25,5	20,3	43	9,52	0,30	**PHS 06B-1DSA18**
	19	61,30	57,87	A	12	31,00	25,5	20,3	46	9,52	0,35	**PHS 06B-1DSA19**
	20	64,30	60,89	A	12	33,00	25,5	20,3	48	9,52	0,39	**PHS 06B-1DSA20**
	21	68,00	63,91	A	15	35,00	25,5	20,3	52	9,52	0,44	**PHS 06B-1DSA21**
	22	71,00	66,93	A	15	36,00	25,5	20,3	55	9,52	0,50	**PHS 06B-1DSA22**
	23	73,50	69,95	A	15	38,00	25,5	20,3	59	9,52	0,55	**PHS 06B-1DSA23**
	24	77,00	72,97	A	15	40,00	25,5	20,3	61	9,52	0,61	**PHS 06B-1DSA24**
	25	80,00	76,02	A	15	43,00	25,5	20,3	65	9,52	0,67	**PHS 06B-1DSA25**
12,70	**12**	53,00	49,07	A	10	24,00	32,0	24,8	35	12,70	0,35	**PHS 08B-1DSA12**
	13	57,40	53,06	A	10	26,00	32,0	24,8	37	12,70	0,41	**PHS 08B-1DSA13**
	14	61,80	57,07	A	10	27,00	32,0	24,8	41	12,70	0,49	**PHS 08B-1DSA14**
	15	65,50	61,09	A	10	30,00	32,0	24,8	45	12,70	0,55	**PHS 08B-1DSA15**
	16	69,50	65,10	A	12	34,00	32,0	24,8	50	12,70	0,64	**PHS 08B-1DSA16**
	17	73,60	69,11	A	12	36,00	32,0	24,8	53	12,70	0,73	**PHS 08B-1DSA17**
	18	77,80	73,14	A	12	38,00	32,0	24,8	58	12,70	0,82	**PHS 08B-1DSA18**
	19	81,70	77,16	A	12	41,00	32,0	24,8	62	12,70	1,00	**PHS 08B-1DSA19**
	20	85,80	81,18	A	12	44,00	32,0	24,8	66	12,70	1,18	**PHS 08B-1DSA20**
	21	89,70	85,22	A	15	46,00	32,0	24,8	70	12,70	1,32	**PHS 08B-1DSA21**
	22	93,80	89,24	A	15	48,00	32,0	24,8	74	12,70	1,36	**PHS 08B-1DSA22**
	23	98,20	93,27	A	15	52,00	32,0	24,8	78	12,70	1,59	**PHS 08B-1DSA23**
	24	101,80	97,29	A	15	54,00	32,0	24,8	82	12,70	1,70	**PHS 08B-1DSA24**
	25	105,80	101,33	A	15	57,00	32,0	24,8	86	12,70	1,82	**PHS 08B-1DSA25**
15,88	**12**	68,00	61,34	A	15	30,00	42,0	27,9	45	0,59	0,59	**PHS 10B-1DSA12**
	13	73,00	66,32	A	15	34,00	42,0	27,9	48	0,70	0,70	**PHS 10B-1DSA13**
	14	78,00	71,34	A	15	36,00	42,0	27,9	55	0,83	0,83	**PHS 10B-1DSA14**
	15	83,00	76,36	A	15	40,00	42,0	27,9	58	0,95	0,95	**PHS 10B-1DSA15**
	16	88,00	81,37	A	15	42,00	42,0	27,9	64	1,09	1,09	**PHS 10B-1DSA16**
	17	93,00	86,39	A	15	44,00	42,0	27,9	68	1,32	1,32	**PHS 10B-1DSA17**
	18	98,00	91,42	A	15	47,00	42,0	27,9	73	1,50	1,50	**PHS 10B-1DSA18**
	19	103,30	96,45	A	19	52,00	42,0	27,9	79	1,68	1,68	**PHS 10B-1DSA19**
	20	108,40	101,49	A	19	57,00	42,0	27,9	83	1,91	1,91	**PHS 10B-1DSA20**
	21	113,40	106,52	A	19	57,00	42,0	27,9	89	2,18	2,18	**PHS 10B-1DSA21**
	22	118,00	111,55	A	19	61,00	42,0	27,9	93	2,41	2,41	**PHS 10B-1DSA22**
	23	123,40	116,58	A	19	65,00	42,0	27,9	99	2,64	2,64	**PHS 10B-1DSA23**
	24	128,30	121,62	A	19	69,00	42,0	27,9	103	2,86	2,86	**PHS 10B-1DSA24**
	25	134,00	126,66	A	19	72,00	42,0	27,9	109	3,16	3,16	**PHS 10B-1DSA25**
19,05	**12**	81,50	73,61	A	20	35,00	45,0	33,9	53	19,05	1,08	**PHS 12B-1DSA12**
	13	87,50	79,59	A	20	38,00	45,0	33,9	59	19,05	1,29	**PHS 12B-1DSA13**
	14	93,60	85,62	A	20	42,00	45,0	33,9	65	19,05	1,52	**PHS 12B-1DSA14**
	15	99,80	91,61	A	20	38,00	45,0	33,9	71	19,05	1,73	**PHS 12B-1DSA15**
	16	105,50	97,63	A	20	46,00	45,0	33,9	77	19,05	2,09	**PHS 12B-1DSA16**
	17	111,50	103,67	A	20	55,00	45,0	33,9	71	19,05	2,41	**PHS 12B-1DSA17**
	18	118,00	109,71	A	20	58,00	45,0	33,9	88	19,05	2,95	**PHS 12B-1DSA18**
	19	124,20	115,75	A	20	62,00	45,0	33,9	71	19,05	3,09	**PHS 12B-1DSA19**
	20	129,70	121,78	A	24	65,00	45,0	33,9	100	19,05	3,30	**PHS 12B-1DSA20**
	21	136,00	127,82	A	24	70,00	45,0	33,9	71	19,05	3,62	**PHS 12B-1DSA21**
	22	141,80	133,86	A	24	73,00	45,0	33,9	112	19,05	4,00	**PHS 12B-1DSA22**
	23	149,00	139,90	A	24	77,00	45,0	33,9	71	19,05	4,60	**PHS 12B-1DSA23**
	24	153,90	145,94	A	24	81,00	45,0	33,9	124	19,05	4,95	**PHS 12B-1DSA24**

All Type B or C sprockets, up to and including 25 tooth, are with hardened teeth as standard.
For any additional size sprockets with hardened teeth, add "H" before the number of teeth, e.g. PHS 06B-1DSAH14.

Metric sprockets, double simplex, pilot bore

ISO 12B-1 · 19,05 mm pitch | ISO 16B-1 · 25,40 mm pitch | ISO 20B-1 · 31,75 mm pitch

Pitch	Number of teeth	Diameters Outside OD	Pitch PD	Type	Dimensions Bore Min.	Max.	L	C	E	Plate thickness t_1	Mass	Designation
mm	–	mm		–	mm						kg	–
19,05	**25**	160,30	151,94	A	24	85,00	45,0	33,9	71	19,05	5,30	**PHS 12B-1DSA25**
25,40	**12**	109,00	98,14	A	24	46,00	64,0	47,8	72	25,40	2,48	**PHS 16B-1DSA12**
	13	117,00	106,12	A	24	50,00	64,0	47,8	78	25,40	3,09	**PHS 16B-1DSA13**
	14	125,00	114,15	A	24	57,00	64,0	47,8	84	25,40	3,70	**PHS 16B-1DSA14**
	15	133,00	122,17	A	24	60,00	64,0	47,8	95	25,40	4,35	**PHS 16B-1DSA15**
	16	141,00	130,20	A	24	68,00	64,0	47,8	101	25,40	5,00	**PHS 16B-1DSA16**
	17	149,00	138,22	A	24	71,00	64,0	47,8	111	25,40	5,75	**PHS 16B-1DSA17**
	18	157,00	146,28	A	24	79,00	64,0	47,8	117	25,40	6,50	**PHS 16B-1DSA18**
	19	165,20	154,33	A	24	82,00	64,0	47,8	127	25,40	7,40	**PHS 16B-1DSA19**
	20	173,20	162,38	A	24	88,00	64,0	47,8	134	25,40	8,30	**PHS 16B-1DSA20**
	21	181,20	170,43	A	24	95,00	64,0	47,8	143	25,40	9,20	**PHS 16B-1DSA21**
	22	189,30	178,48	A	24	100,00	64,0	47,8	151	25,40	10,15	**PHS 16B-1DSA22**
	23	197,50	186,59	A	24	107,00	64,0	47,8	160	25,40	11,20	**PHS 16B-1DSA23**
	24	205,50	194,59	A	24	111,00	64,0	47,8	168	25,40	12,80	**PHS 16B-1DSA24**
	25	213,50	178,49	A	24	115,00	64,0	47,8	176	25,40	14,40	**PHS 16B-1DSA25**
31,75	**13**	147,83	132,66	A	25	63,50	68,3	49,8	96	31,75	5,09	**PHS 20B-1DSA13**
	14	158,24	142,67	A	25	69,85	68,3	49,8	106	31,75	6,14	**PHS 20B-1DSA14**
	15	168,40	152,70	A	32	77,79	68,3	49,8	116	31,75	7,64	**PHS 20B-1DSA15**
	16	178,56	162,74	A	32	82,55	68,3	49,8	114	31,75	8,77	**PHS 20B-1DSA16**
	17	188,98	172,80	A	32	92,08	68,3	49,8	124	31,75	9,77	**PHS 20B-1DSA17**
	18	199,14	182,83	A	32	95,25	68,3	49,8	134	31,75	10,45	**PHS 20B-1DSA18**
	19	209,30	192,91	A	32	106,36	68,3	49,8	157	31,75	11,36	**PHS 20B-1DSA19**
	20	219,46	202,97	A	32	106,36	68,3	49,8	167	31,75	12,05	**PHS 20B-1DSA20**
	21	229,62	213,03	A	32	133,35	68,3	49,8	177	31,75	13,18	**PHS 20B-1DSA21**

All Type B or C sprockets, up to and including 25 tooth, are with hardened teeth as standard.
For any additional size sprockets with hardened teeth, add "H" before the number of teeth, e.g. PHS 06B-1DSAH14.

Metric sprockets, double simplex, taper bushed

ISO 06B-1 · 9,525 mm pitch | ISO 08B-1 · 12,70 mm pitch | ISO 10B-1 · 15,88 mm pitch | ISO 12B-1 · 19,05 mm pitch | ISO 16B-1 · 25,40 mm pitch

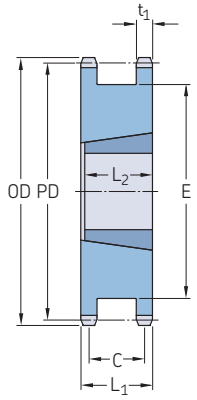

Type A

Pitch	Number of teeth	Diameters Outside OD	Pitch PD	Type	Bushing number	Dimensions Bore Min.	Max.	L_1	C	E	L_2	Plate thickness t_1	Mass*	Designation
mm	–	mm		–	–	mm							kg	–
9,525	**18**	58,30	54,85	A	1008	9	25	23,5	18,17	43	22,2	5,31	0,19	**PHS 06B-1DSTBH18**
	19	61,30	57,87	A	1008	9	25	23,5	18,17	46	22,2	5,31	0,23	**PHS 06B-1DSTBH19**
	20	64,30	60,89	A	1108	9	28	23,5	18,17	48	22,2	5,31	0,25	**PHS 06B-1DSTBH20**
	21	68,00	63,91	A	1108	9	28	23,5	18,17	52	22,2	5,31	0,31	**PHS 06B-1DSTBH21**
	22	71,00	66,93	A	1108	9	28	23,5	18,17	55	22,2	5,31	0,36	**PHS 06B-1DSTBH22**
	23	73,50	69,95	A	1108	9	28	23,5	18,17	58	22,2	5,31	0,41	**PHS 06B-1DSTBH23**
	24	77,00	72,97	A	1108	9	28	23,5	18,17	61	22,2	5,31	0,47	**PHS 06B-1DSTBH24**
	25	80,00	76,02	A	1108	9	28	23,5	18,17	64	22,2	5,31	0,53	**PHS 06B-1DSTBH25**
12,70	**14**	61,80	57,07	A	1008	9	25	35,7	28,58	41	22,2	7,20	0,32	**PHS 08B-1DSTBH14**
	15	65,30	61,09	A	1008	9	25	35,7	28,58	45	22,2	7,20	0,40	**PHS 08B-1DSTBH15**
	16	69,50	65,10	A	1108	9	28	35,7	28,58	49	22,2	7,20	0,44	**PHS 08B-1DSTBH16**
	17	73,60	69,11	A	1215	11	32	35,7	28,58	53	38,1	7,20	0,43	**PHS 08B-1DSTBH17**
	18	77,80	73,14	A	1215	11	32	35,7	28,58	58	38,1	7,20	0,46	**PHS 08B-1DSTBH18**
	19	81,70	77,15	A	1215	11	32	35,7	28,58	63	38,1	7,20	0,50	**PHS 08B-1DSTBH19**
	20	85,80	81,18	A	1215	11	32	35,7	28,58	66	38,1	7,20	0,59	**PHS 08B-1DSTBH20**
	21	89,70	85,22	A	1615	14	42	35,7	28,58	70	38,1	7,20	0,59	**PHS 08B-1DSTBH21**
	22	93,80	89,24	A	1615	14	42	35,7	28,58	74	38,1	7,20	0,64	**PHS 08B-1DSTBH22**
	23	98,20	93,27	A	1615	14	42	35,7	28,58	78	38,1	7,20	0,68	**PHS 08B-1DSTBH23**
	24	101,80	97,29	A	1615	14	42	35,7	28,58	82	38,1	7,20	0,77	**PHS 08B-1DSTBH24**
	25	105,80	101,33	A	2012	14	50	35,7	28,58	86	31,8	7,20	0,86	**PHS 08B-1DSTBH25**
15,88	**12**	68,00	61,34	A	1108	9	28	42,0	33,34	15.88	9,0	9,10	28,00	**PHS 10B-1DSTBH12**
	13	73,00	66,32	A	1108	9	28	42,0	33,34	15.88	9,0	9,10	28,00	**PHS 10B-1DSTBH13**
	14	78,00	71,34	A	1108	9	28	42,0	33,34	15.88	9,0	9,10	28,00	**PHS 10B-1DSTBH14**
	15	83,00	76,36	A	1215	11	32	42,0	33,34	15.88	11,0	9,10	32,00	**PHS 10B-1DSTBH15**
	16	88,00	81,37	A	1215	11	32	42,0	33,34	15.88	11,0	9,10	32,00	**PHS 10B-1DSTBH16**
	17	93,00	86,39	A	1615	14	42	42,0	33,34	15.88	14,0	9,10	42,00	**PHS 10B-1DSTBH17**
	18	98,30	91,42	A	1615	14	42	42,0	33,34	15.88	14,0	9,10	42,00	**PHS 10B-1DSTBH18**
	19	103,30	96,42	A	1615	14	42	42,0	33,34	15.88	14,0	9,10	42,00	**PHS 10B-1DSTBH19**
	20	108,40	101,49	A	1615	14	42	42,0	33,34	15.88	14,0	9,10	42,00	**PHS 10B-1DSTBH20**
	21	113,40	106,52	A	2012	14	50	42,0	33,34	15.88	14,0	9,10	50,00	**PHS 10B-1DSTBH21**
	22	118,00	111,55	A	2012	14	50	42,0	33,34	15.88	14,0	9,10	50,00	**PHS 10B-1DSTBH22**
	23	123,40	116,58	A	2012	14	50	42,0	33,34	15.88	14,0	9,10	50,00	**PHS 10B-1DSTBH23**
	24	128,30	121,62	A	2012	14	50	42,0	33,34	15.88	14,0	9,10	50,00	**PHS 10B-1DSTBH24**
	25	134,00	126,66	A	2012	14	50	42,0	33,34	15.88	14,0	9,10	50,00	**PHS 10B-1DSTBH25**
19,05	**12**	81,50	73,61	A	1215	11	32	49,2	38,10	19.05	11,0	11,10	32,00	**PHS 12B-1DSTBH12**
	13	87,50	79,59	A	1215	11	32	49,2	38,10	19.05	11,0	11,10	32,00	**PHS 12B-1DSTBH13**
	14	93,60	85,62	A	1215	11	32	49,2	38,10	19.05	11,0	11,10	32,00	**PHS 12B-1DSTBH14**
	15	99,80	91,61	A	1615	14	42	49,2	38,10	19.05	14,0	11,10	42,00	**PHS 12B-1DSTBH15**
	16	105,50	97,63	A	1615	14	42	49,2	38,10	19.05	14,0	11,10	42,00	**PHS 12B-1DSTBH16**
	17	111,50	103,67	A	1615	14	42	49,2	38,10	19.05	14,0	11,10	42,00	**PHS 12B-1DSTBH17**
	18	118,00	109,71	A	2012	14	50	49,2	38,10	19.05	14,0	11,10	50,00	**PHS 12B-1DSTBH18**
	19	124,20	115,75	A	2012	14	50	49,2	38,10	19.05	14,0	11,10	50,00	**PHS 12B-1DSTBH19**
	20	129,70	121,78	A	2517	16	65	49,2	38,10	19.05	16,0	11,10	65,00	**PHS 12B-1DSTBH20**
	21	136,00	127,82	A	2517	16	65	49,2	38,10	19.05	16,0	11,10	65,00	**PHS 12B-1DSTBH21**
	22	141,80	133,86	A	2517	16	65	49,2	38,10	19.05	16,0	11,10	65,00	**PHS 12B-1DSTBH22**
	23	149,00	139,90	A	2517	16	65	49,2	38,10	19.05	16,0	11,10	65,00	**PHS 12B-1DSTBH23**
	24	153,90	145,94	A	2517	16	65	49,2	38,10	19.05	16,0	11,10	65,00	**PHS 12B-1DSTBH24**
	25	160,30	151,94	A	2517	16	65	49,2	38,10	19.05	16,0	11,10	65,00	**PHS 12B-1DSTBH25**
25,40	**12**	109,00	98,14	A	1615	14	42	63,5	46,50	72	38,1	16,20	1,92	**PHS 16B-1DSTBH12**
	13	117,00	106,12	A	1615	14	42	63,5	46,50	80	38,1	16,20	2,53	**PHS 16B-1DSTBH13**
	14	125,00	114,15	A	2012	14	50	63,5	46,50	88	31,8	16,20	2,53	**PHS 16B-1DSTBH14**
	15	133,00	122,17	A	2012	14	50	63,5	46,50	96	31,8	16,20	3,10	**PHS 16B-1DSTBH15**
	16	141,00	130,20	A	2012	14	50	63,5	46,50	104	31,8	16,20	3,68	**PHS 16B-1DSTBH16**

* Mass for rim only
All Type B or C sprockets, up to and including 25 tooth, are with hardened teeth as standard.
For any additional size sprockets with hardened teeth, add "H" before the number of teeth, e.g. PHS 06B-1DSTBH18.

Metric sprockets, double simplex, taper bushed

ISO 16B-1 · 25,40 mm pitch | ISO 20B-1 · 31,75 mm pitch

Pitch	Number of teeth	Diameters Outside OD	Pitch PD	Type	Bushing number	Dimensions Bore Min.	Max.	L_1	C	E	L_2	Plate thickness t_1	Mass*	Designation
mm	–	mm		–	–	mm							kg	–
25,40	**17**	149,00	138,22	A	2517	16	65	63,5	46,50	112	44,5	16,20	3,89	**PHS 16B-1DSTBH17**
	18	157,00	146,28	A	2517	16	65	63,5	46,50	120	44,5	16,20	4,65	**PHS 16B-1DSTBH18**
	19	165,20	154,33	A	3020	25	75	63,5	46,50	128	50,8	16,20	4,50	**PHS 16B-1DSTBH19**
	20	173,20	162,38	A	3020	25	75	63,5	46,50	135	50,8	16,20	5,10	**PHS 16B-1DSTBH20**
	21	181,20	170,43	A	3020	25	75	63,5	46,50	142	50,8	16,20	6,00	**PHS 16B-1DSTBH21**
	22	189,30	178,48	A	3020	25	75	63,5	46,50	151	50,8	16,20	6,20	**PHS 16B-1DSTBH22**
	23	197,50	186,59	A	3525	35	90	63,5	46,50	160	63,5	16,20	7,15	**PHS 16B-1DSTBH23**
	24	205,50	194,59	A	3525	35	90	63,5	46,50	167	63,5	16,20	8,10	**PHS 16B-1DSTBH24**
	25	213,50	178,49	A	3525	35	90	63,5	46,50	175	63,5	16,20	9,00	**PHS 16B-1DSTBH25**
31,75	**15**	167,90	152,72	A	2517	16	60	68,3	49,80	115	44,5	18,50	4,20	**PHS 20B-1DSTBH15**
	16	177,90	162,75	A	2517	16	60	68,3	49,80	127	44,5	18,50	5,91	**PHS 20B-1DSTBH16**
	17	172,80	172,78	A	3020	25	75	68,3	49,80	137	50,8	18,50	6,36	**PHS 20B-1DSTBH17**
	18	182,83	182,85	A	3020	25	75	68,3	49,80	147	50,8	18,50	7,27	**PHS 20B-1DSTBH18**
	19	192,91	192,91	A	3020	25	75	68,3	49,80	157	50,8	18,50	9,09	**PHS 20B-1DSTBH19**
	20	218,10	202,98	A	3020	25	75	68,3	49,80	167	50,8	18,50	10,85	**PHS 20B-1DSTBH20**
	21	228,28	213,03	A	3020	25	75	68,3	49,80	177	50,8	18,50	12,50	**PHS 20B-1DSTBH21**

* Mass for rim only
All Type B or C sprockets, up to and including 25 tooth, are with hardened teeth as standard.
For any additional size sprockets with hardened teeth, add "H" before the number of teeth, e.g. PHS 06B-1DSTBH18.

Metric sprockets, duplex, standard

ISO 06B-2 · 9,525 mm pitch | ISO 08B-2 · 12,70 mm pitch

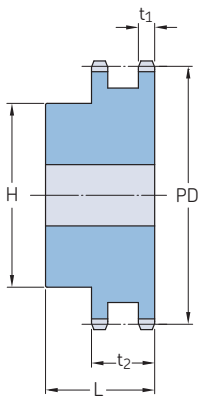

Type B

Pitch	Number of teeth	Pitch diameter	Type	Dimensions Bore		Hub		Plate thickness		Mass	Designation
		PD		Min.	Max.	H	L	t_1	t_2		
mm	–	mm	–	mm						kg	–
9,525	**12**	36,80	B	10	12	25	25	5,20	15,44	0,11	**PHS 06B-2BH12**
	13	39,79	B	10	12	28	25	5,20	15,44	0,14	**PHS 06B-2BH13**
	14	42,80	B	10	18	31	25	5,20	15,44	0,17	**PHS 06B-2BH14**
	15	45,81	B	10	18	34	25	5,20	15,44	0,20	**PHS 06B-2BH15**
	16	48,82	B	12	20	37	30	5,20	15,44	0,26	**PHS 06B-2BH16**
	17	51,83	B	12	23	40	30	5,20	15,44	0,32	**PHS 06B-2BH17**
	18	54,85	B	12	25	43	30	5,20	15,44	0,37	**PHS 06B-2BH18**
	19	57,87	B	12	28	46	30	5,20	15,44	0,42	**PHS 06B-2BH19**
	20	60,89	B	12	25	49	30	5,20	15,44	0,48	**PHS 06B-2BH20**
	21	63,91	B	12	30	52	30	5,20	15,44	0,54	**PHS 06B-2BH21**
	22	66,93	B	12	28	55	30	5,20	15,44	0,61	**PHS 06B-2BH22**
	23	69,95	B	12	35	58	30	5,20	15,44	0,67	**PHS 06B-2BH23**
	24	72,97	B	12	32	61	30	5,20	15,44	0,74	**PHS 06B-2BH24**
	25	76,00	B	12	40	64	30	5,20	15,44	0,81	**PHS 06B-2BH25**
	26	79,02	B	12	32	67	30	5,20	15,44	0,92	**PHS 06B-2B26**
	27	82,05	B	12	40	70	30	5,20	15,44	0,97	**PHS 06B-2B27**
	28	85,07	B	12	32	73	30	5,20	15,44	1,08	**PHS 06B-2B28**
	29	88,09	B	12	32	76	30	5,20	15,44	1,15	**PHS 06B-2B29**
	30	91,12	B	12	40	79	30	5,20	15,44	1,23	**PHS 06B-2B30**
	32	97,17	B	16	52	80	30	5,20	15,44	1,38	**PHS 06B-2B32**
	35	106,26	B	16	52	80	30	5,20	15,44	1,61	**PHS 06B-2B35**
	36	109,29	B	16	60	90	30	5,20	15,44	1,69	**PHS 06B-2B36**
	38	115,35	B	16	50	90	30	5,20	15,44	1,84	**PHS 06B-2B38**
	40	121,40	B	16	52	90	30	5,20	15,44	2,00	**PHS 06B-2B40**
	42	127,46	B	16	60	90	40	5,20	15,44	2,15	**PHS 06B-2B42**
	45	136,55	B	16	50	90	40	5,20	15,44	2,01	**PHS 06B-2B45**
	48	145,64	B	16	60	90	40	5,20	15,44	2,61	**PHS 06B-2B48**
	52	157,75	B	16	60	90	40	5,20	15,44	2,92	**PHS 06B-2B52**
	57	172,91	B	16	50	90	40	5,20	15,44	2,34	**PHS 06B-2B57**
	60	182,00	B	16	60	90	40	5,20	15,44	3,53	**PHS 06B-2B60**
	68	206,24	B	16	60	90	40	5,20	15,44	4,14	**PHS 06B-2B68**
	70	212,30	B	16	60	90	40	5,20	15,44	4,30	**PHS 06B-2B70**
	72	218,37	B	16	60	90	40	5,20	15,44	4,45	**PHS 06B-2B72**
	76	230,49	B	16	50	90	40	5,20	15,44	3,35	**PHS 06B-2B76**
	84	254,74	B	16	60	90	40	5,20	15,44	5,37	**PHS 06B-2B84**
	95	288,08	B	16	62	90	40	5,20	15,44	6,21	**PHS 06B-2B95**
	96	291,11	B	16	62	90	40	5,20	15,44	6,29	**PHS 06B-2B96**
	114	345,68	B	16	62	90	40	5,20	15,44	7,67	**PHS 06B-2B114**
12,70	**10**	41,10	B	10	18	28	32	7,24	21,13	0,15	**PHS 08B-2BH10**
	11	45,07	B	12	21	32	35	7,24	21,13	0,22	**PHS 08B-2BH11**
	12	49,07	B	12	19	35	35	7,24	21,13	0,29	**PHS 08B-2BH12**
	13	53,06	B	12	21	38	35	7,24	21,13	0,36	**PHS 08B-2BH13**
	14	57,07	B	12	28	42	35	7,24	21,13	0,44	**PHS 08B-2BH14**
	15	61,09	B	12	28	46	35	7,24	21,13	0,52	**PHS 08B-2BH15**
	16	65,10	B	14	33	50	35	7,24	21,13	0,61	**PHS 08B-2BH16**
	17	69,11	B	14	30	54	35	7,24	21,13	0,70	**PHS 08B-2BH17**
	18	73,14	B	14	38	58	35	7,24	21,13	0,81	**PHS 08B-2BH18**
	19	77,16	B	14	40	62	35	7,24	21,13	0,91	**PHS 08B-2BH19**
	20	81,19	B	14	40	66	35	7,24	21,13	1,10	**PHS 08B-2BH20**
	21	85,22	B	16	40	70	40	7,24	21,13	1,29	**PHS 08B-2BH21**
	22	89,24	B	16	45	70	40	7,24	21,13	1,37	**PHS 08B-2BH22**
	23	93,27	B	16	50	70	40	7,24	21,13	1,46	**PHS 08B-2BH23**
	24	97,29	B	16	50	75	40	7,24	21,13	1,64	**PHS 08B-2BH24**

Maximum bores can accommodate standard keyways. Larger bores are available.
All Type B or C sprockets, up to and including 25 tooth, are with hardened teeth as standard.
For any additional size sprockets with hardened teeth, add "H" before the number of teeth, e.g. PHS 06B-2BH12.

Metric sprockets, duplex, standard

ISO 08B-2 · 12,70 mm pitch | ISO 10B-2 · 15,88 mm pitch | ISO 12B-2 · 19,05 mm pitch

Pitch	Number of teeth	Pitch diameter	Type	Dimensions Bore		Hub		Plate thickness		Mass	Designation
		PD		Min.	Max.	H	L	t_1	t_2		
mm	–	mm	–	mm						kg	–
12,70	**25**	101,33	B	16	50	80	40	7,24	21,13	1,83	**PHS 08B-2BH25**
	26	105,36	B	16	56	85	40	7,24	21,13	1,96	**PHS 08B-2B26**
	27	109,40	B	16	50	85	40	7,24	21,13	2,09	**PHS 08B-2B27**
	28	113,42	B	16	60	90	40	7,24	21,13	2,31	**PHS 08B-2B28**
	29	117,46	B	16	62	95	40	7,24	21,13	2,53	**PHS 08B-2B29**
	30	121,50	B	16	50	100	40	7,24	21,13	2,75	**PHS 08B-2B30**
	32	129,56	B	20	64	100	40	7,24	21,13	3,08	**PHS 08B-2B32**
	34	137,64	B	20	64	100	40	7,24	21,13	3,24	**PHS 08B-2B34**
	35	141,68	B	20	64	100	40	7,24	21,13	3,41	**PHS 08B-2B35**
	36	145,72	B	20	73	100	40	7,24	21,13	3,74	**PHS 08B-2B36**
	38	153,80	B	20	55	100	40	7,24	21,13	4,08	**PHS 08B-2B38**
	40	161,87	B	20	73	100	50	7,24	21,13	4,00	**PHS 08B-2B40**
	42	169,95	B	20	73	108	50	7,24	21,13	3,90	**PHS 08B-2B42**
	45	182,07	B	20	55	108	50	7,24	21,13	3,70	**PHS 08B-2B45**
	48	194,18	B	20	73	108	50	7,24	21,13	4,10	**PHS 08B-2B48**
	54	218,43	B	20	73	108	50	7,24	21,13	4,70	**PHS 08B-2B54**
	57	230,54	B	20	55	108	50	7,24	21,13	5,01	**PHS 08B-2B57**
	60	242,66	B	20	73	108	50	7,24	21,13	5,34	**PHS 08B-2B60**
	68	274,99	B	20	73	108	55	7,24	21,13	5,68	**PHS 08B-2B68**
	72	291,16	B	20	73	108	55	7,24	21,13	6,02	**PHS 08B-2B72**
	76	307,33	B	20	60	108	55	7,24	21,13	6,36	**PHS 08B-2B76**
	84	339,65	B	20	80	120	55	7,24	21,13	8,31	**PHS 08B-2B84**
	95	384,10	B	20	60	110	55	7,24	21,13	10,26	**PHS 08B-2B95**
	96	388,15	B	20	80	110	55	7,24	21,13	11,00	**PHS 08B-2B96**
	114	460,90	B	20	80	110	55	7,24	21,13	12,45	**PHS 08B-2B114**
15,88	**11**	56,34	B	14	24	39	40	8,97	25,55	0,45	**PHS 10B-2BH11**
	12	61,34	B	14	25	44	40	8,97	25,55	0,57	**PHS 10B-2BH12**
	13	66,32	B	14	29	49	40	8,97	25,55	0,70	**PHS 10B-2BH13**
	14	71,34	B	14	35	54	40	8,97	25,55	0,84	**PHS 10B-2BH14**
	15	76,36	B	14	35	59	40	8,97	25,55	0,99	**PHS 10B-2BH15**
	16	81,37	B	16	40	64	45	8,97	25,55	1,23	**PHS 10B-2BH16**
	17	86,39	B	16	40	69	45	8,97	25,55	1,47	**PHS 10B-2BH17**
	18	91,42	B	16	48	74	45	8,97	25,55	1,68	**PHS 10B-2BH18**
	19	96,45	B	16	46	79	45	8,97	25,55	1,90	**PHS 10B-2BH19**
	20	101,49	B	16	56	84	45	8,97	25,55	2,10	**PHS 10B-2BH20**
	21	106,52	B	16	55	85	45	8,97	25,55	2,31	**PHS 10B-2BH21**
	22	111,55	B	16	60	90	45	8,97	25,55	2,58	**PHS 10B-2BH22**
	23	116,58	B	16	55	95	45	8,97	25,55	2,85	**PHS 10B-2BH23**
	24	121,62	B	16	64	100	45	8,97	25,55	3,14	**PHS 10B-2BH24**
	25	126,66	B	16	55	105	45	8,97	25,55	3,44	**PHS 10B-2BH25**
	26	131,70	B	20	73	110	45	8,97	25,55	3,69	**PHS 10B-2B26**
	27	136,75	B	20	55	110	45	8,97	25,55	3,95	**PHS 10B-2B27**
	28	141,78	B	20	76	115	45	8,97	25,55	4,25	**PHS 10B-2B28**
	29	146,83	B	20	76	115	45	8,97	25,55	4,55	**PHS 10B-2B29**
	30	151,87	B	20	58	120	45	8,97	25,55	4,87	**PHS 10B-2B30**
	32	161,95	B	20	80	120	45	8,97	25,55	4,95	**PHS 10B-2B32**
	35	177,10	B	20	80	120	45	8,97	25,55	5,08	**PHS 10B-2B35**
	36	182,15	B	20	80	120	45	8,97	25,55	5,11	**PHS 10B-2B36**
	38	192,24	B	20	58	120	45	8,97	25,55	5,20	**PHS 10B-2B38**
	40	202,34	B	20	80	120	45	8,97	25,55	5,41	**PHS 10B-2B40**
	45	227,58	B	20	60	120	50	8,97	25,55	5,94	**PHS 10B-2B45**
	48	242,73	B	20	80	120	50	8,97	25,55	7,27	**PHS 10B-2B48**
	57	288,18	B	20	60	120	50	8,97	25,55	8,61	**PHS 10B-2B57**
	60	303,32	B	20	85	120	57	8,97	25,55	9,30	**PHS 10B-2B60**
	70	353,84	B	20	85	120	57	8,97	25,55	9,99	**PHS 10B-2B70**
	76	384,16	B	20	85	120	57	8,97	25,55	10,68	**PHS 10B-2B76**
	80	404,35	B	20	85	130	58	8,97	25,55	11,00	**PHS 10B-2B80**
	95	480,14	B	20	85	130	58	8,97	25,55	12,00	**PHS 10B-2B95**
	114	576,13	B	20	85	130	58	8,97	25,55	13,00	**PHS 10B-2B114**
19,05	**10**	61,65	B	12	32	42	45	10,87	30,33	0,57	**PHS 12B-2BH10**
	11	67,61	B	16	32	47	50	10,87	30,33	0,80	**PHS 12B-2BH11**
	12	73,61	B	16	32	53	50	10,87	30,33	1,03	**PHS 12B-2BH12**
	13	79,59	B	16	36	59	50	10,87	30,33	1,26	**PHS 12B-2BH13**
	14	85,61	B	16	42	65	50	10,87	30,33	1,52	**PHS 12B-2BH14**
	15	91,63	B	16	44	71	50	10,87	30,33	1,78	**PHS 12B-2BH15**
	16	97,65	B	20	51	77	50	10,87	30,33	2,08	**PHS 12B-2BH16**
	17	103,67	B	20	55	83	50	10,87	30,33	2,37	**PHS 12B-2BH17**
	18	109,71	B	20	60	89	50	10,87	30,33	2,72	**PHS 12B-2BH18**
	19	115,75	B	20	55	95	50	10,87	30,33	3,07	**PHS 12B-2BH19**
	20	121,78	B	20	64	100	50	10,87	30,33	3,39	**PHS 12B-2BH20**
	21	127,82	B	20	60	100	50	10,87	30,33	3,70	**PHS 12B-2BH21**
	22	133,86	B	20	64	100	50	10,87	30,33	4,11	**PHS 12B-2BH22**
	23	139,90	B	20	60	110	50	10,87	30,33	4,52	**PHS 12B-2BH23**
	24	145,94	B	20	73	110	50	10,87	30,33	4,96	**PHS 12B-2BH24**

Maximum bores can accommodate standard keyways. Larger bores are available.
All Type B or C sprockets, up to and including 25 tooth, are with hardened teeth as standard.
For any additional size sprockets with hardened teeth, add "H" before the number of teeth, e.g. PHS 06B-2BH12.

Metric sprockets, duplex, standard

ISO 12B-2 · 19,05 mm pitch | ISO 16B-2 · 25,40 mm pitch

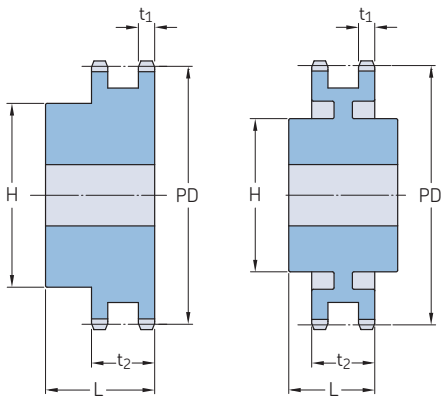

Pitch	Number of teeth	Pitch diameter	Type	Dimensions Bore		Hub		Plate thickness		Mass	Designation
		PD		Min.	Max.	H	L	t_1	t_2		
mm	–	mm	–	mm						kg	–
19,05	**25**	152,00	B	20	60	120	50	10,87	30,33	5,39	**PHS 12B-2BH25**
	26	158,04	B	20	80	120	50	10,87	30,33	5,74	**PHS 12B-2B26**
	27	164,09	B	20	60	120	50	10,87	30,33	6,09	**PHS 12B-2B27**
	28	170,13	B	20	80	120	50	10,87	30,33	6,45	**PHS 12B-2B28**
	30	182,25	B	20	60	120	50	10,87	30,33	7,17	**PHS 12B-2B30**
	32	194,36	B	20	85	120	50	10,87	30,33	8,41	**PHS 12B-2B32**
	35	212,52	B	20	85	120	50	10,87	30,33	9,70	**PHS 12B-2B35**
	36	218,58	B	25	85	120	50	10,87	30,33	10,12	**PHS 12B-2B36**
	38	230,69	B	25	65	120	50	10,87	30,33	10,98	**PHS 12B-2B38**
	40	242,81	B	25	85	120	50	10,87	30,33	11,84	**PHS 12B-2B40**
	45	273,10	B	25	65	136	62	10,87	30,33	10,58	**PHS 12B-2B45**
	48	291,27	B	25	85	136	62	10,87	30,33	15,26	**PHS 12B-2B48**
	57	345,81	B	25	70	136	62	10,87	30,33	11,72	**PHS 12B-2B57**
	60	363,99	B	25	85	136	62	10,87	30,33	20,40	**PHS 12B-2B60**
	68	412,49	C	25	85	140	63	10,87	30,33	23,83	**PHS 12B-2C68**
	76	460,99	C	25	80	140	63	10,87	30,33	18,50	**PHS 12B-2C76**
	80	485,22	C	25	85	140	63	10,87	30,33	28,97	**PHS 12B-2C80**
	95	576,17	C	25	93	140	63	10,87	30,33	35,39	**PHS 12B-2C95**
	96	582,23	C	25	93	140	63	10,87	30,33	35,82	**PHS 12B-2C96**
	114	691,36	C	25	93	140	63	10,87	30,33	43,53	**PHS 12B-2C114**
25,40	**11**	90,14	B	20	42	64	70	15,83	47,71	1,86	**PHS 16B-2BH11**
	12	98,14	B	20	45	72	70	15,83	47,71	2,54	**PHS 16B-2BH12**
	13	106,12	B	20	48	80	70	15,83	47,71	3,22	**PHS 16B-2BH13**
	14	114,15	B	20	53	88	70	15,83	47,71	3,90	**PHS 16B-2BH14**
	15	122,17	B	20	58	96	70	15,83	47,71	4,58	**PHS 16B-2BH15**
	16	130,20	B	20	66	104	70	15,83	47,71	5,35	**PHS 16B-2BH16**
	17	138,22	B	20	70	112	70	15,83	47,71	6,12	**PHS 16B-2BH17**
	18	146,28	B	20	80	120	70	15,83	47,71	7,02	**PHS 16B-2BH18**
	19	154,33	B	20	70	128	70	15,83	47,71	7,91	**PHS 16B-2BH19**
	20	162,38	B	20	85	130	70	15,83	47,71	8,59	**PHS 16B-2BH20**
	21	170,43	B	25	75	130	70	15,83	47,71	9,26	**PHS 16B-2BH21**
	22	178,48	B	25	85	130	70	15,83	47,71	10,05	**PHS 16B-2BH22**
	23	186,53	B	25	75	130	70	15,83	47,71	10,84	**PHS 16B-2BH23**
	24	194,59	B	25	85	130	70	15,83	47,71	11,70	**PHS 16B-2BH24**
	25	202,66	B	25	75	130	70	15,83	47,71	12,56	**PHS 16B-2BH25**
	26	210,72	B	25	85	130	70	15,83	47,71	13,52	**PHS 16B-2B26**
	27	218,79	B	25	75	130	70	15,83	47,71	14,48	**PHS 16B-2B27**
	28	226,85	B	25	85	130	70	15,83	47,71	15,49	**PHS 16B-2B28**
	29	234,92	B	25	85	130	70	15,83	47,71	16,51	**PHS 16B-2B29**
	30	243,00	B	25	75	130	70	15,83	47,71	17,52	**PHS 16B-2B30**
	32	259,13	B	25	95	140	70	15,83	47,71	20,13	**PHS 16B-2B32**
	35	283,36	B	25	95	140	70	15,83	47,71	24,04	**PHS 16B-2B35**
	36	291,44	B	25	95	140	70	15,83	47,71	25,34	**PHS 16B-2B36**
	38	307,59	B	25	75	140	70	15,83	47,71	27,95	**PHS 16B-2B38**
	42	339,90	B	25	95	140	70	15,83	47,71	32,35	**PHS 16B-2B42**
	45	364,13	C	25	85	140	70	15,83	47,71	22,00	**PHS 16B-2C45**
	57	461,07	C	25	85	150	85	15,83	47,71	34,50	**PHS 16B-2C57**
	60	485,32	C	25	95	150	85	15,83	47,71	52,14	**PHS 16B-2C60**
	68	549,98	C	25	96	160	90	15,83	47,71	60,93	**PHS 16B-2C68**
	76	614,65	C	25	100	160	90	15,83	47,71	51,50	**PHS 16B-2C76**
	80	646,96	C	25	102	160	90	15,83	47,71	74,13	**PHS 16B-2C80**
	95	768,22	C	25	100	160	90	15,83	47,71	90,62	**PHS 16B-2C95**
	114	921,81	C	25	102	160	90	15,83	47,71	111,51	**PHS 16B-2C114**

Maximum bores can accommodate standard keyways. Larger bores are available.
All Type B or C sprockets, up to and including 25 tooth, are with hardened teeth as standard.
For any additional size sprockets with hardened teeth, add "H" before the number of teeth, e.g. PHS 06B-2BH12.

Metric sprockets, duplex, standard

ISO 20B-2 · 31,75 mm pitch | ISO 24B-2 · 38,10 mm pitch | ISO 28B-2 · 44,45 mm pitch

Pitch	Number of teeth	Pitch diameter	Type	Dimensions Bore		Hub		Plate thickness		Mass	Designation
		PD		Min.	Max.	H	L	t_1	t_2		
mm	–	mm	–	mm						kg	–
31,75	**10**	102,75	B	20	45	70	75	18,19	54,64	2,90	**PHS 20B-2BH10**
	11	112,70	B	20	52	80	80	18,19	54,64	3,67	**PHS 20B-2BH11**
	12	122,67	B	20	60	90	80	18,19	54,64	4,31	**PHS 20B-2BH12**
	13	132,67	B	20	64	100	80	18,19	54,64	5,53	**PHS 20B-2BH13**
	14	142,68	B	20	73	110	80	18,19	54,64	6,62	**PHS 20B-2BH14**
	15	152,71	B	20	80	120	80	18,19	54,64	7,76	**PHS 20B-2BH15**
	16	162,75	B	25	80	120	80	18,19	54,64	9,12	**PHS 20B-2BH16**
	17	172,79	B	25	80	120	80	18,19	54,64	10,44	**PHS 20B-2BH17**
	18	182,84	B	25	80	120	80	18,19	54,64	11,71	**PHS 20B-2BH18**
	19	192,90	B	25	80	120	80	18,19	54,64	12,92	**PHS 20B-2BH19**
	20	202,96	B	25	80	120	80	18,19	54,64	15,43	**PHS 20B-2BH20**
	21	213,03	B	25	92	140	80	18,19	54,64	16,55	**PHS 20B-2BH21**
	22	223,10	B	25	92	140	80	18,19	54,64	17,70	**PHS 20B-2BH22**
	23	233,17	B	25	92	140	80	18,19	54,64	19,05	**PHS 20B-2BH23**
	24	243,25	B	25	96	140	80	18,19	54,64	20,43	**PHS 20B-2BH24**
	25	253,32	B	25	96	140	80	18,19	54,64	21,77	**PHS 20B-2BH25**
	26	263,41	B	25	96	150	80	18,19	54,64	23,15	**PHS 20B-2B26**
	27	273,49	B	25	96	150	80	18,19	54,64	24,97	**PHS 20B-2B27**
	28	283,57	B	25	96	150	80	18,19	54,64	26,78	**PHS 20B-2B28**
	30	303,75	B	25	96	150	80	18,19	54,64	30,41	**PHS 20B-2B30**
	32	323,92	B	25	96	150	80	18,19	54,64	32,22	**PHS 20B-2B32**
	35	354,20	C	25	100	150	80	18,19	54,64	34,02	**PHS 20B-2C35**
	36	364,29	C	30	100	150	80	18,19	54,64	34,70	**PHS 20B-2C36**
	38	384,48	C	30	100	150	80	18,19	54,64	43,72	**PHS 20B-2C38**
	42	424,86	C	30	100	160	90	18,19	54,64	43,55	**PHS 20B-2C42**
	45	455,15	C	30	100	160	90	18,19	54,64	46,72	**PHS 20B-2C45**
	57	576,35	C	30	100	160	100	18,19	54,64	64,10	**PHS 20B-2C57**
	60	606,66	C	30	125	160	100	18,19	54,64	79,38	**PHS 20B-2C60**
	68	687,48	C	30	125	180	100	18,19	54,64	87,74	**PHS 20B-2C68**
	76	768,30	C	30	125	180	100	18,19	54,64	96,11	**PHS 20B-2C76**
	80	808,71	C	30	125	180	100	18,19	54,64	100,30	**PHS 20B-2C80**
	95	960,28	C	30	125	180	100	18,19	54,64	115,98	**PHS 20B-2C95**
	114	1 152,26	C	30	125	180	100	18,19	54,64	135,85	**PHS 20B-2C114**
38,10	**11**	135,23	B	25	60	90	100	23,62	71,98	6,50	**PHS 24B-2BH11**
	12	147,21	B	25	67	102	100	23,62	71,98	8,13	**PHS 24B-2BH12**
	13	159,20	B	25	76	114	100	23,62	71,98	9,92	**PHS 24B-2BH13**
	14	171,22	B	25	84	128	100	23,62	71,98	11,98	**PHS 24B-2BH14**
	15	183,25	B	25	93	132	100	23,62	71,98	14,13	**PHS 24B-2BH15**
	16	195,29	B	25	100	136	100	23,62	71,98	16,35	**PHS 24B-2BH16**
	17	207,35	B	25	100	136	100	23,62	71,98	17,85	**PHS 24B-2BH17**
	18	219,41	B	25	108	150	100	23,62	71,98	20,35	**PHS 24B-2BH18**
	19	231,48	B	25	108	160	100	23,62	71,98	22,56	**PHS 24B-2BH19**
	20	243,55	B	25	108	160	100	23,62	71,98	24,78	**PHS 24B-2BH20**
	21	255,63	B	25	108	160	100	23,62	71,98	26,99	**PHS 24B-2BH21**
	22	267,72	B	25	108	160	100	23,62	71,98	29,74	**PHS 24B-2BH22**
	23	279,80	B	25	108	160	100	23,62	71,98	32,87	**PHS 24B-2BH23**
	24	291,90	B	25	108	160	100	23,62	71,98	36,00	**PHS 24B-2BH24**
	25	303,99	B	25	108	160	100	23,62	71,98	39,13	**PHS 24B-2BH25**
	26	316,09	B	30	108	160	100	23,62	71,98	42,26	**PHS 24B-2B26**
	27	328,19	B	30	108	160	100	23,62	71,98	45,40	**PHS 24B-2B27**
	28	340,29	B	30	108	160	100	23,62	71,98	48,53	**PHS 24B-2B28**
	29	352,39	B	30	108	160	100	23,62	71,98	51,66	**PHS 24B-2B29**
	30	364,49	B	30	108	160	100	23,62	71,98	54,79	**PHS 24B-2B30**
	32	388,71	B	30	108	160	100	23,62	71,98	61,05	**PHS 24B-2B32**
	38	461,37	B	30	137	160	100	23,62	71,98	72,01	**PHS 24B-2B38**
	40	485,60	C	30	137	160	100	23,62	71,98	75,80	**PHS 24B-2C40**
	42	509,83	C	30	137	180	100	23,62	71,98	79,59	**PHS 24B-2C42**
	45	546,19	C	30	137	180	100	23,62	71,98	85,28	**PHS 24B-2C45**
	48	582,54	C	30	137	180	100	23,62	71,98	90,97	**PHS 24B-2C48**
	50	606,78	C	30	137	180	100	23,62	71,98	94,76	**PHS 24B-2C50**
	54	655,26	C	30	161	180	110	23,62	71,98	127,46	**PHS 24B-2C54**
	57	691,62	C	30	161	180	110	23,62	71,98	140,74	**PHS 24B-2C57**
	60	727,99	C	30	161	180	120	23,62	71,98	154,02	**PHS 24B-2C60**
	68	824,97	C	30	161	200	120	23,62	71,98	189,45	**PHS 24B-2C68**
	72	873,46	C	30	161	200	120	23,62	71,98	207,16	**PHS 24B-2C72**
	76	921,96	C	30	161	200	120	23,62	71,98	224,87	**PHS 24B-2C76**
	95	1 152,33	C	30	161	200	120	23,62	71,98	309,00	**PHS 24B-2C95**
	96	1 164,46	C	30	161	200	120	23,62	71,98	313,43	**PHS 24B-2C96**
	114	1 382,72	C	30	161	200	120	23,62	71,98	393,13	**PHS 24B-2C114**
44,45	**11**	157,77	B	25	73	112	120	29,36	88,90	10,21	**PHS 28B-2BH11**
	12	171,74	B	25	84	125	120	29,36	88,90	13,02	**PHS 28B-2BH12**
	13	185,75	B	25	84	125	120	29,36	88,90	16,00	**PHS 28B-2BH13**
	14	199,76	B	25	87	125	120	29,36	88,90	19,28	**PHS 28B-2BH14**

Maximum bores can accommodate standard keyways. Larger bores are available.
All Type B or C sprockets, up to and including 25 tooth, are with hardened teeth as standard.
For any additional size sprockets with hardened teeth, add "H" before the number of teeth, e.g. PHS 06B-2BH12.

Metric sprockets, duplex, standard

ISO 28B-2 · 44,45 mm pitch | ISO 32B-2 · 50,80 mm pitch

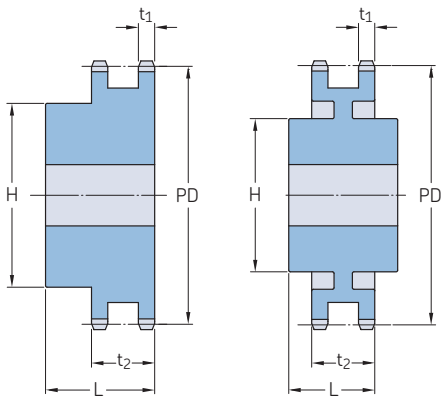

Pitch	Number of teeth	Pitch diameter	Type	Dimensions Bore		Hub		Plate thickness		Mass	Designation
		PD		Min.	Max.	H	L	t_1	t_2		
mm	–	mm	–	mm						kg	–
44,45	**15**	213,79	B	25	96	145	120	29,36	88,90	22,91	**PHS 28B-2BH15**
	16	227,84	B	30	108	160	120	29,36	88,90	26,92	**PHS 28B-2BH16**
	17	241,91	B	30	114	160	120	29,36	88,90	30,83	**PHS 28B-2BH17**
	18	255,98	B	30	114	160	120	29,36	88,90	34,74	**PHS 28B-2BH18**
	19	270,06	B	30	133	180	120	29,36	88,90	38,93	**PHS 28B-2BH19**
	20	284,15	B	30	133	180	120	29,36	88,90	44,27	**PHS 28B-2BH20**
	21	298,24	B	30	133	180	120	29,36	88,90	45,08	**PHS 28B-2BH21**
	22	312,34	B	30	133	180	120	29,36	88,90	48,15	**PHS 28B-2BH22**
	23	326,44	B	30	133	180	120	29,36	88,90	51,59	**PHS 28B-2BH23**
	24	340,55	B	30	133	180	120	29,36	88,90	55,03	**PHS 28B-2BH24**
	25	354,66	B	30	133	180	120	29,36	88,90	58,47	**PHS 28B-2BH25**
	26	368,77	B	30	133	180	120	29,36	88,90	64,06	**PHS 28B-2B26**
	28	397,00	B	30	133	180	120	29,36	88,90	76,05	**PHS 28B-2B28**
	30	425,24	B	30	133	180	120	29,36	88,90	89,16	**PHS 28B-2B30**
	32	453,49	B	30	133	180	120	29,36	88,90	103,38	**PHS 28B-2B32**
	38	538,27	B	30	133	200	120	29,36	88,90	97,53	**PHS 28B-2B38**
	40	566,54	C	30	137	200	120	29,36	88,90	109,47	**PHS 28B-2C40**
	45	637,22	C	30	137	200	120	29,36	88,90	137,32	**PHS 28B-2C45**
	48	679,63	C	30	137	200	120	29,36	88,90	153,61	**PHS 28B-2C48**
	54	764,46	C	30	162	200	120	29,36	88,90	204,44	**PHS 28B-2C54**
	57	806,90	C	30	162	200	120	29,36	88,90	210,02	**PHS 28B-2C57**
	60	849,32	C	30	162	200	130	29,36	88,90	230,82	**PHS 28B-2C60**
	68	962,46	C	30	162	200	130	29,36	88,90	273,98	**PHS 28B-2C68**
	72	1 019,05	C	30	162	200	130	29,36	88,90	305,70	**PHS 28B-2C72**
	76	1 075,62	C	30	162	200	130	29,36	88,90	323,56	**PHS 28B-2C76**
50,80	**11**	180,34	B	30	80	120	120	28,83	87,38	10,42	**PHS 32B-2BH11**
	12	196,29	B	30	89	133	120	28,83	87,38	16,32	**PHS 32B-2BH12**
	13	212,29	B	30	96	145	120	28,83	87,38	21,77	**PHS 32B-2BH13**
	14	228,29	B	30	103	145	120	28,83	87,38	26,31	**PHS 32B-2BH14**
	15	244,30	B	30	106	160	120	28,83	87,38	30,84	**PHS 32B-2BH15**
	16	260,40	B	30	120	160	120	28,83	87,38	34,02	**PHS 32B-2BH16**
	17	276,40	B	30	120	180	120	28,83	87,38	41,28	**PHS 32B-2BH17**
	18	292,55	B	30	120	180	120	28,83	87,38	43,55	**PHS 32B-2BH18**
	19	308,66	B	30	120	200	120	28,83	87,38	48,53	**PHS 32B-2BH19**
	20	324,71	B	30	130	200	120	28,83	87,38	53,98	**PHS 32B-2BH20**
	21	340,82	B	30	130	200	120	28,83	87,38	58,97	**PHS 32B-2BH21**
	22	356,98	B	30	130	200	120	28,83	87,38	63,96	**PHS 32B-2BH22**
	23	373,08	B	30	130	200	120	28,83	87,38	71,21	**PHS 32B-2BH23**
	24	389,18	B	30	130	200	120	28,83	87,38	77,57	**PHS 32B-2BH24**
	25	405,33	B	30	130	200	120	28,83	87,38	84,82	**PHS 32B-2BH25**
	26	421,44	B	30	130	200	120	28,83	87,38	91,17	**PHS 32B-2B26**
	28	453,69	B	30	130	200	120	28,83	87,38	101,13	**PHS 32B-2B28**
	30	486,00	B	30	130	200	120	28,83	87,38	116,57	**PHS 32B-2B30**
	38	615,14	B	30	178	200	120	28,83	87,38	170,25	**PHS 32B-2B38**
	40	647,49	C	30	178	200	120	28,83	87,38	177,46	**PHS 32B-2C40**
	45	728,26	C	30	178	200	120	28,83	87,38	195,50	**PHS 32B-2C45**
	48	776,72	C	30	178	200	120	28,83	87,38	204,51	**PHS 32B-2C48**
	54	873,68	C	30	178	220	120	28,83	87,38	222,53	**PHS 32B-2C54**
	57	922,16	C	30	178	220	120	28,83	87,38	231,54	**PHS 32B-2C57**
	68	1 099,96	C	30	178	220	130	28,83	87,38	255,83	**PHS 32B-2C68**
	76	1 229,28	C	30	178	220	130	28,83	87,38	292,83	**PHS 32B-2C76**

Maximum bores can accommodate standard keyways. Larger bores are available.
All Type B or C sprockets, up to and including 25 tooth, are with hardened teeth as standard.
For any additional size sprockets with hardened teeth, add "H" before the number of teeth, e.g. PHS 06B-2BH12.

Metric sprockets, duplex, taper bushed

ISO 06B-2 · 9,525 mm pitch | ISO 08B-2 · 12,70 mm pitch

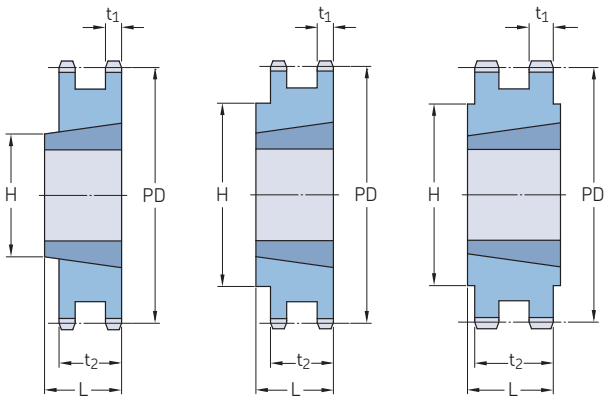

Type A Type B Type C

Pitch	Number of teeth	Pitch diameter	Type	Bushing number	Dimensions Bore				Plate thickness		Mass Rim	Bushing	Designation
		PD			Min.	Max.	L	H	t_1	t_2			
mm	–	mm	–	–	mm						kg		–
9,525	**16**	48,82	B	1108	9	25,4	22,0	41	5,20	15,44	0,06	0,12	**PHS 06B-2TBH16**
	17	51,83	B	1008	9	25,4	22,0	41	5,20	15,44	0,12	0,09	**PHS 06B-2TBH17**
	18	54,85	B	1008	9	25,4	22,0	45	5,20	15,44	0,18	0,09	**PHS 06B-2TBH18**
	19	57,87	B	1008	9	25,4	22,0	46	5,20	15,44	0,20	0,09	**PHS 06B-2TBH19**
	20	60,89	B	1008	9	25,4	22,0	48	5,20	15,44	0,24	0,09	**PHS 06B-2TBH20**
	21	63,91	B	1008	9	25,4	22,0	49	5,20	15,44	0,29	0,09	**PHS 06B-2TBH21**
	22	66,93	B	1108	9	25,4	22,0	52	5,20	15,44	0,30	0,12	**PHS 06B-2TBH22**
	23	69,95	B	1210	11	31,8	25,0	59	5,20	15,44	0,26	0,21	**PHS 06B-2TBH23**
	24	72,97	B	1210	11	31,8	25,0	63	5,20	15,44	0,34	0,21	**PHS 06B-2TBH24**
	25	76,00	B	1210	11	31,8	25,0	64	5,20	15,44	0,41	0,21	**PHS 06B-2TBH25**
	26	79,02	B	1210	11	31,8	25,0	65	5,20	15,44	0,45	0,21	**PHS 06B-2TB26**
	27	82,05	B	1210	11	31,8	25,0	70	5,20	15,44	0,50	0,21	**PHS 06B-2TB27**
	28	85,07	B	1210	11	31,8	25,0	70	5,20	15,44	0,54	0,21	**PHS 06B-2TB28**
	29	88,09	B	1210	11	31,8	25,0	70	5,20	15,44	0,51	0,21	**PHS 06B-2TB29**
	30	91,12	B	1210	11	31,8	25,0	75	5,20	15,44	0,61	0,21	**PHS 06B-2TB30**
	32	97,17	B	1610	14	41,3	25,0	80	5,20	15,44	0,75	0,31	**PHS 06B-2TB32**
	35	106,26	B	1610	14	41,3	25,0	80	5,20	15,44	0,95	0,31	**PHS 06B-2TB35**
	38	115,35	B	1610	14	41,3	25,0	80	5,20	15,44	1,16	0,31	**PHS 06B-2TB38**
	40	121,40	B	1610	14	41,3	25,0	80	5,20	15,44	1,30	0,31	**PHS 06B-2TB40**
	45	136,55	B	1610	14	41,3	25,0	80	5,20	15,44	1,64	0,31	**PHS 06B-2TB45**
	48	145,64	B	1610	14	41,3	25,0	80	5,20	15,44	1,85	0,31	**PHS 06B-2TB48**
	54	163,82	B	1610	14	41,3	25,0	80	5,20	15,44	2,26	0,31	**PHS 06B-2TB54**
	57	172,91	B	1610	14	41,3	25,0	80	5,20	15,44	1,75	0,31	**PHS 06B-2TB57**
	60	182,00	B	1610	14	41,3	25,0	80	5,20	15,44	2,67	0,31	**PHS 06B-2TB60**
	70	212,30	B	1610	14	41,3	25,0	80	5,20	15,44	3,36	0,31	**PHS 06B-2TB70**
	76	230,49	B	1610	14	41,3	25,0	80	5,20	15,44	3,19	0,31	**PHS 06B-2TB76**
	95	288,08	B	1610	14	41,3	25,0	90	5,20	15,44	5,08	0,31	**PHS 06B-2TB95**
	114	345,68	B	1615	14	50,8	38,0	95	5,20	15,44	6,39	0,59	**PHS 06B-2TB114**
12,70	**15**	61,09	A	1008	9	25,4	22,0	46	7,24	21,13	0,23	0,09	**PHS 08B-2TBH15**
	16	65,10	A	1108	9	28,0	22,0	50	7,24	21,13	0,25	0,12	**PHS 08B-2TBH16**
	17	69,11	A	1210	11	31,8	25,0	56	7,24	21,13	0,26	0,21	**PHS 08B-2TBH17**
	18	73,14	B	1210	11	31,8	25,0	60	7,24	21,13	0,31	0,21	**PHS 08B-2TBH18**
	19	77,16	B	1210	11	31,8	25,0	62	7,24	21,13	0,43	0,21	**PHS 08B-2TBH19**
	20	81,19	B	1610	14	41,3	25,0	68	7,24	21,13	0,45	0,31	**PHS 08B-2TBH20**
	21	85,22	B	1610	14	41,3	25,0	70	7,24	21,13	0,48	0,31	**PHS 08B-2TBH21**
	22	89,24	B	1610	14	41,3	25,0	76	7,24	21,13	0,54	0,31	**PHS 08B-2TBH22**
	23	93,27	B	1610	14	41,3	25,0	79	7,24	21,13	0,66	0,31	**PHS 08B-2TBH23**
	24	97,29	B	1610	14	50,8	32,0	84	7,24	21,13	0,60	0,59	**PHS 08B-2TBH24**
	25	101,33	B	2012	14	50,8	32,0	87	7,24	21,13	0,74	0,59	**PHS 08B-2TBH25**
	26	105,36	B	2012	14	50,8	32,0	87	7,24	21,13	0,81	0,59	**PHS 08B-2TB26**
	27	109,40	B	2012	14	50,8	32,0	87	7,24	21,13	0,92	0,59	**PHS 08B-2TB27**
	28	113,42	B	2012	14	50,8	32,0	87	7,24	21,13	1,03	0,59	**PHS 08B-2TB28**
	29	117,46	B	2012	14	50,8	32,0	87	7,24	21,13	1,16	0,59	**PHS 08B-2TB29**
	30	121,50	B	2012	14	50,8	32,0	87	7,24	21,13	1,25	0,59	**PHS 08B-2TB30**
	35	141,68	B	2012	14	50,8	32,0	100	7,24	21,13	1,65	0,59	**PHS 08B-2TB35**
	36	145,72	B	2012	14	50,8	32,0	100	7,24	21,13	2,05	0,59	**PHS 08B-2TB36**
	38	153,80	B	2012	14	50,8	32,0	100	7,24	21,13	2,53	0,59	**PHS 08B-2TB38**
	42	169,94	C	2517	16	63,5	32,0	100	7,24	21,13	3,13	1,30	**PHS 08B-2TB42**
	45	182,07	C	2012	14	50,8	32,0	100	7,24	21,13	3,73	0,59	**PHS 08B-2TB45**
	48	194,18	C	2517	16	63,5	32,0	100	7,24	21,13	3,84	1,30	**PHS 08B-2TB48**
	54	218,42	C	2517	16	63,5	32,0	100	7,24	21,13	3,95	1,30	**PHS 08B-2TB54**
	57	230,53	C	2012	14	50,8	32,0	100	7,24	21,13	4,07	0,59	**PHS 08B-2TB57**
	60	242,66	C	2517	16	63,5	32,0	100	7,24	21,13	4,20	1,30	**PHS 08B-2TB60**

All Type B or C sprockets, up to and including 25 tooth, are with hardened teeth as standard.
For any additional size sprockets with hardened teeth, add "H" before the number of teeth, e.g. PHS 06B-2TBH16.

Metric sprockets, duplex, taper bushed

ISO 08B-2 · 12,70 mm pitch | ISO 10B-2 · 15,88 mm pitch | ISO 12B-2 · 19,05 mm pitch

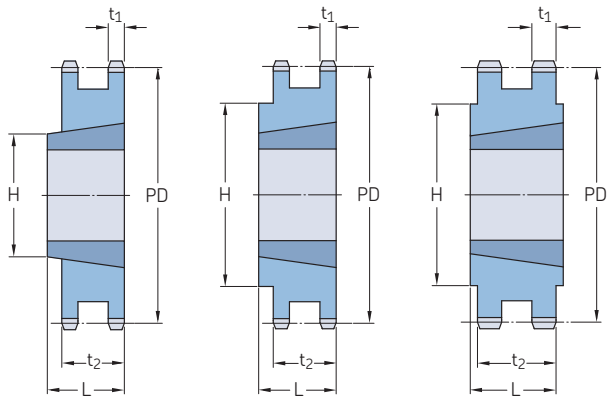

Type A Type B Type C

Pitch	Number of teeth	Pitch diameter	Type	Bushing number	Dimensions Bore				Plate thickness		Mass Rim	Bushing	Designation
		PD			Min.	Max.	L	H	t_1	t_2			
mm	–	mm	–	–	mm						kg		–
12,70	**68**	274,99	C	2517	16	63,5	32,0	100	7,24	21,13	4,33	1,30	**PHS 08B-2TB68**
	70	283,07	C	2517	16	63,5	32,0	100	7,24	21,13	4,46	1,30	**PHS 08B-2TB70**
	72	291,15	C	2517	16	63,5	32,0	100	7,24	21,13	4,59	1,30	**PHS 08B-2TB72**
	76	307,31	C	2012	14	50,8	32,0	100	7,24	21,13	4,72	0,59	**PHS 08B-2TB76**
	84	339,65	C	2517	16	63,5	32,0	100	7,24	21,13	6,45	1,30	**PHS 08B-2TB84**
	95	384,10	C	2012	14	50,8	32,0	100	7,24	21,13	8,18	0,59	**PHS 08B-2TB95**
	96	388,15	C	2517	16	63,5	32,0	110	7,24	21,13	9,00	1,30	**PHS 08B-2TB96**
	114	460,90	C	2517	16	63,5	45,0	110	7,24	21,13	10,50	1,30	**PHS 08B-2TB114**
15,88	**14**	71,34	A	1008	9	25,4	25,5	–	8,97	25,22	0,43	0,09	**PHS 10B-2TBH14**
	15	76,36	A	1210	11	31,8	25,5	–	8,97	25,22	0,39	0,21	**PHS 10B-2TBH15**
	16	81,37	A	1610	14	41,3	25,5	–	8,97	25,22	0,35	0,31	**PHS 10B-2TBH16**
	17	86,39	A	1610	14	41,3	25,5	–	8,97	25,22	0,46	0,31	**PHS 10B-2TBH17**
	18	91,42	A	1610	14	41,3	25,5	–	8,97	25,22	0,62	0,31	**PHS 10B-2TBH18**
	19	96,45	A	1610	14	41,3	25,5	–	8,97	25,22	0,75	0,31	**PHS 10B-2TBH19**
	20	101,49	B	1610	14	41,3	25,5	–	8,97	25,55	0,87	0,31	**PHS 10B-2TBH20**
	21	106,52	B	1610	14	41,3	25,5	–	8,97	25,55	1,05	0,31	**PHS 10B-2TBH21**
	22	111,55	B	1610	14	41,3	25,5	–	8,97	25,55	1,20	0,31	**PHS 10B-2TBH22**
	23	116,58	B	1610	14	41,3	25,5	–	8,97	25,55	1,38	0,31	**PHS 10B-2TBH23**
	24	121,62	B	2012	14	50,8	32,0	90	8,97	25,55	1,43	0,59	**PHS 10B-2TBH24**
	25	126,66	B	2012	14	50,8	32,0	90	8,97	25,55	1,62	0,59	**PHS 10B-2TBH25**
	26	131,70	B	2012	14	50,8	32,0	90	8,97	25,55	1,79	0,59	**PHS 10B-2TB26**
	27	136,75	B	2012	14	50,8	32,0	90	8,97	25,55	2,00	0,59	**PHS 10B-2TB27**
	28	141,78	B	2012	14	50,8	32,0	90	8,97	25,55	2,20	0,59	**PHS 10B-2TB28**
	29	146,83	B	2012	14	50,8	32,0	90	8,97	25,55	2,43	0,59	**PHS 10B-2TB29**
	30	151,87	B	2012	14	50,8	32,0	90	8,97	25,55	2,66	0,59	**PHS 10B-2TB30**
	36	182,15	C	2517	16	63,5	45,0	110	8,97	25,55	4,33	1,30	**PHS 10B-2TB36**
	38	192,24	C	2517	14	50,8	45,0	110	8,97	25,55	4,88	0,59	**PHS 10B-2TB38**
	42	212,44	C	2517	16	63,5	45,0	110	8,97	25,55	5,99	1,30	**PHS 10B-2TB42**
	45	227,58	C	2517	16	63,5	45,0	110	8,97	25,55	6,83	1,30	**PHS 10B-2TB45**
	48	242,73	C	2517	16	63,5	45,0	110	8,97	25,55	7,66	1,30	**PHS 10B-2TB48**
	57	288,18	C	2517	16	63,5	45,0	110	8,97	25,55	10,15	1,30	**PHS 10B-2TB57**
	60	303,32	C	2517	16	63,5	45,0	110	8,97	25,55	10,99	1,30	**PHS 10B-2TB60**
	68	343,74	C	2517	16	63,5	45,0	110	8,97	25,55	13,21	1,30	**PHS 10B-2TB68**
	76	384,16	C	2517	16	63,5	45,0	110	8,97	25,55	15,43	1,30	**PHS 10B-2TB76**
	84	424,57	C	2517	16	63,5	45,0	110	8,97	25,55	17,65	1,30	**PHS 10B-2TB84**
	95	480,14	C	2517	16	63,5	45,0	110	8,97	25,55	20,70	1,30	**PHS 10B-2TB95**
	114	576,13	C	2517	16	63,5	45,0	110	8,97	25,55	25,97	1,30	**PHS 10B-2TB114**
19,05	**12**	73,61	A	1215	11	31,8	30,3	–	10,87	30,33	0,19	0,30	**PHS 12B-2TBH12**
	13	79,59	A	1215	14	41,3	30,3	–	10,87	30,33	0,36	0,30	**PHS 12B-2TBH13**
	14	85,61	A	1215	14	41,3	30,3	–	10,87	30,33	0,53	0,30	**PHS 12B-2TBH14**
	15	91,63	A	1610	14	41,3	30,3	–	10,87	30,33	0,70	0,31	**PHS 12B-2TBH15**
	16	97,65	A	1610	14	41,3	30,3	–	10,87	30,33	0,87	0,31	**PHS 12B-2TBH16**
	17	103,67	A	1610	14	41,3	30,3	–	10,87	30,33	1,10	0,31	**PHS 12B-2TBH17**
	18	109,71	B	2012	14	50,8	31,8	90	10,87	30,33	1,05	0,59	**PHS 12B-2TBH18**
	19	115,75	B	2012	14	50,8	32,0	90	10,87	30,33	1,29	0,59	**PHS 12B-2TBH19**
	20	121,78	B	2517	16	63,5	45,0	102	10,87	30,33	1,34	1,30	**PHS 12B-2TBH20**
	21	127,82	B	2517	16	63,5	45,0	108	10,87	30,33	1,71	1,30	**PHS 12B-2TBH21**
	22	133,86	B	2517	16	63,5	45,0	108	10,87	30,33	2,03	1,30	**PHS 12B-2TBH22**
	23	139,90	B	2517	16	63,5	45,0	108	10,87	30,33	2,51	1,30	**PHS 12B-2TBH23**
	24	145,94	B	2517	16	63,5	45,0	108	10,87	30,33	2,58	1,30	**PHS 12B-2TBH24**
	25	152,00	B	2517	16	63,5	45,0	108	10,87	30,33	3,38	1,30	**PHS 12B-2TBH25**
	26	158,04	B	2517	16	63,5	45,0	108	10,87	30,33	3,24	1,30	**PHS 12B-2TB26**
	27	164,09	B	2517	16	63,5	45,0	108	10,87	30,33	4,00	1,30	**PHS 12B-2TB27**

All Type B or C sprockets, up to and including 25 tooth, are with hardened teeth as standard.
For any additional size sprockets with hardened teeth, add "H" before the number of teeth, e.g. PHS 06B-2TBH16.

Metric sprockets, duplex, taper bushed

ISO 12B-2 · 19,05 mm pitch | ISO 16B-2 · 25,40 mm pitch

Pitch	Number of teeth	Pitch diameter	Type	Bushing number	Dimensions Bore				Plate thickness		Mass Rim	Bushing	Designation
		PD			Min.	Max.	L	H	t_1	t_2			
mm	–	mm	–	–	mm						kg		–
19,05	**28**	170,13	B	2517	16	63,5	45,0	108	10,87	30,33	3,92	1,30	**PHS 12B-2TB28**
	30	182,25	B	2517	16	63,5	45,0	108	10,87	30,33	5,14	1,30	**PHS 12B-2TB30**
	32	194,36	B	2517	16	63,5	44,5	130	10,87	30,33	5,92	1,30	**PHS 12B-2TB32**
	35	212,52	B	2517	16	63,5	44,5	130	10,87	30,33	7,08	1,30	**PHS 12B-2TB35**
	38	230,69	B	3020	25	76,2	51,0	140	10,87	30,33	6,95	2,24	**PHS 12B-2TB38**
	40	242,81	C	3020	25	76,2	51,0	140	10,87	30,33	9,03	2,24	**PHS 12B-2TB40**
	42	254,93	C	3020	25	76,2	51,0	140	10,87	30,33	9,81	2,24	**PHS 12B-2TB42**
	45	273,10	C	3020	25	76,2	51,0	140	10,87	30,33	9,33	2,24	**PHS 12B-2TB45**
	54	327,64	C	3020	25	76,2	51,0	140	10,87	30,33	14,47	2,24	**PHS 12B-2TB54**
	57	345,81	C	3020	25	76,2	51,0	140	10,87	30,33	10,50	2,24	**PHS 12B-2TB57**
	60	363,99	C	3020	25	76,2	51,0	140	10,87	30,33	16,80	2,24	**PHS 12B-2TB60**
	65	394,29	C	3020	25	76,2	51,0	140	10,87	30,33	18,75	2,24	**PHS 12B-2TB65**
	70	424,60	C	3020	25	76,2	51,0	140	10,87	30,33	20,69	2,24	**PHS 12B-2TB70**
	76	460,99	C	3020	25	76,2	51,0	140	10,87	30,33	17,06	2,24	**PHS 12B-2TB76**
	84	509,48	C	3020	25	76,2	51,0	140	10,87	30,33	26,13	2,24	**PHS 12B-2TB84**
	95	576,17	C	3020	25	76,2	51,0	140	10,87	30,33	28,50	2,24	**PHS 12B-2TB95**
	114	691,36	C	3020	25	76,2	76,0	140	10,87	30,33	37,80	2,24	**PHS 12B-2TB114**
25,40	**13**	106,12	A	1615	14	42,0	47,7	–	15,83	47,71	0,51	0,59	**PHS 16B-2TBH13**
	14	114,15	A	2012	14	50,8	47,7	–	15,83	47,71	1,01	0,59	**PHS 16B-2TBH14**
	15	122,17	A	2012	14	50,8	47,7	–	15,83	47,71	2,12	0,59	**PHS 16B-2TBH15**
	16	130,20	A	2517	16	63,5	47,7	–	15,83	47,71	2,01	1,30	**PHS 16B-2TBH16**
	17	138,22	A	2517	16	63,5	47,7	–	15,83	47,71	2,51	1,30	**PHS 16B-2TBH17**
	18	146,28	A	2517	16	63,5	47,7	–	15,83	47,71	3,13	1,30	**PHS 16B-2TBH18**
	19	154,33	A	2517	16	63,5	47,7	–	15,83	47,71	3,76	1,30	**PHS 16B-2TBH19**
	20	162,38	B	2517	16	63,5	47,7	140	15,83	47,71	4,43	1,30	**PHS 16B-2TBH20**
	21	170,43	B	3020	25	76,2	51,0	140	15,83	47,71	4,13	2,24	**PHS 16B-2TBH21**
	22	178,48	B	3020	25	76,2	51,0	140	15,83	47,71	4,95	2,24	**PHS 16B-2TBH22**
	23	186,53	B	3020	25	76,2	51,0	140	15,83	47,71	5,80	2,24	**PHS 16B-2TBH23**
	24	194,59	B	3020	25	76,2	51,0	140	15,83	47,71	6,68	2,24	**PHS 16B-2TBH24**
	25	202,66	B	3020	25	76,2	51,0	140	15,83	47,71	7,65	2,24	**PHS 16B-2TBH25**
	26	210,72	B	3020	25	76,2	51,0	140	15,83	47,71	8,50	2,24	**PHS 16B-2TB26**
	27	218,79	B	3020	25	76,2	51,0	140	15,83	47,71	9,47	2,24	**PHS 16B-2TB27**
	28	226,85	B	3020	25	76,2	51,0	140	15,83	47,71	10,46	2,24	**PHS 16B-2TB28**
	29	234,92	B	3020	25	76,2	51,0	140	15,83	47,71	11,48	2,24	**PHS 16B-2TB29**
	30	243,00	B	3020	25	76,2	51,0	140	15,83	47,71	12,50	3,04	**PHS 16B-2TB30**
	35	283,36	C	3030	35	76,2	76,0	140	15,83	47,71	16,36	3,04	**PHS 16B-2TB35**
	38	307,59	C	3030	25	63,5	51,0	140	15,83	47,71	13,48	3,04	**PHS 16B-2TB38**
	42	339,90	C	3030	35	76,2	76,0	140	15,83	47,71	22,52	2,24	**PHS 16B-2TB42**
	45	364,13	C	3030	35	76,2	76,0	140	15,83	47,71	18,30	3,04	**PHS 16B-2TB45**
	57	461,07	C	3525	35	100,0	63,5	175	15,83	47,71	27,00	3,56	**PHS 16B-2TB57**
	76	614,65	C	3525	35	100,0	63,5	175	15,83	47,71	43,50	3,56	**PHS 16B-2TB76**
	95	768,22	C	4040	40	101,6	102,0	215	15,83	47,71	67,00	5,54	**PHS 16B-2TB95**
	114	921,81	C	4040	40	101,6	102,0	215	15,83	47,71	85,88	5,54	**PHS 16B-2TB114**

All Type B or C sprockets, up to and including 25 tooth, are with hardened teeth as standard.
For any additional size sprockets with hardened teeth, add "H" before the number of teeth, e.g. PHS 06B-2TBH16.

Metric sprockets, triplex, standard

ISO 06B-3 · 9,525 mm pitch | ISO 08B-3 · 12,70 mm pitch

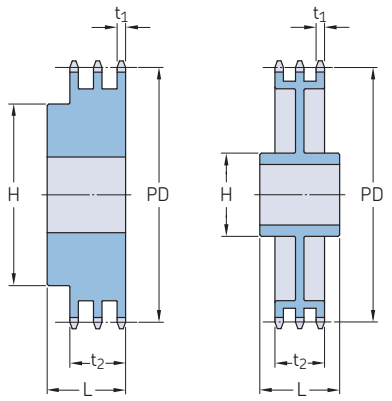

Type B Type C

Pitch	Number of teeth	Pitch diameter	Type	Dimensions Bore		Hub		Plate thickness		Mass	Designation
		PD		Min.	Max.	H	L	t_1	t_2		
mm	–	mm	–	mm						kg	–
9,525	**12**	36,80	B	10	16	25	35	5,20	25,70	0,23	**PHS 06B-3BH12**
	13	39,79	B	10	18	28	35	5,20	25,70	0,27	**PHS 06B-3BH13**
	14	42,80	B	12	18	31	35	5,20	25,70	0,32	**PHS 06B-3BH14**
	15	45,81	B	12	20	34	35	5,20	25,70	0,36	**PHS 06B-3BH15**
	16	48,82	B	12	20	37	35	5,20	25,70	0,45	**PHS 06B-3BH16**
	17	51,83	B	12	24	40	35	5,20	25,70	0,54	**PHS 06B-3BH17**
	18	54,85	B	12	25	43	35	5,20	25,70	0,64	**PHS 06B-3BH18**
	19	57,87	B	12	28	46	35	5,20	25,70	0,72	**PHS 06B-3BH19**
	20	60,89	B	12	30	49	35	5,20	25,70	0,77	**PHS 06B-3BH20**
	21	63,91	B	14	30	52	40	5,20	25,70	0,86	**PHS 06B-3BH21**
	22	66,93	B	14	35	55	40	5,20	25,70	0,95	**PHS 06B-3BH22**
	23	69,95	B	14	38	58	40	5,20	25,70	1,04	**PHS 06B-3BH23**
	24	72,97	B	14	39	61	40	5,20	25,70	1,18	**PHS 06B-3BH24**
	25	76,02	B	14	40	64	40	5,20	25,70	1,27	**PHS 06B-3BH25**
	26	79,02	B	14	42	67	40	5,20	25,70	1,31	**PHS 06B-3B26**
	27	82,02	B	14	45	70	40	5,20	25,70	1,36	**PHS 06B-3B27**
	28	85,07	B	14	48	73	40	5,20	25,70	1,50	**PHS 06B-3B28**
	29	88,09	B	14	50	76	40	5,20	25,70	1,68	**PHS 06B-3B29**
	30	91,12	B	14	52	79	40	5,20	25,70	1,72	**PHS 06B-3B30**
	32	97,17	B	16	52	80	40	5,20	25,70	2,00	**PHS 06B-3B32**
	35	106,26	B	16	52	85	40	5,20	25,70	2,25	**PHS 06B-3B35**
	36	109,29	B	16	60	90	40	5,20	25,70	2,33	**PHS 06B-3B36**
	38	115,35	B	16	60	90	40	5,20	25,70	2,49	**PHS 06B-3B38**
	40	121,40	B	16	60	90	40	5,20	25,70	2,65	**PHS 06B-3B40**
	42	127,46	B	16	60	90	56	5,20	25,70	2,81	**PHS 06B-3B42**
	45	136,55	B	16	60	90	56	5,20	25,70	3,00	**PHS 06B-3B45**
	48	145,64	B	16	60	90	56	5,20	25,70	3,20	**PHS 06B-3B48**
	52	157,75	B	16	60	90	56	5,20	25,70	3,46	**PHS 06B-3B52**
	57	172,91	B	16	60	90	56	5,20	25,70	4,77	**PHS 06B-3B57**
	60	181,99	B	16	60	90	56	5,20	25,70	5,02	**PHS 06B-3B60**
	68	206,24	B	16	60	90	56	5,20	25,70	5,69	**PHS 06B-3B68**
	70	212,30	B	16	60	90	56	5,20	25,70	5,86	**PHS 06B-3B70**
	72	218,37	B	16	60	90	56	5,20	25,70	6,02	**PHS 06B-3B72**
	76	230,49	B	16	64	90	56	5,20	25,70	8,48	**PHS 06B-3B76**
	84	254,74	B	16	64	90	56	5,20	25,70	9,37	**PHS 06B-3B84**
	95	288,08	B	16	64	90	56	5,20	25,70	13,61	**PHS 06B-3B95**
	96	291,11	B	16	64	90	56	5,20	25,70	13,75	**PHS 06B-3B96**
	114	345,69	B	16	64	90	56	5,20	25,70	17,48	**PHS 06B-3B114**
12,70	**11**	45,07	B	14	22	32	50	7,24	35,05	0,32	**PHS 08B-3BH11**
	12	49,07	B	14	24	35	50	7,24	35,05	0,45	**PHS 08B-3BH12**
	13	53,06	B	14	25	38	50	7,24	35,05	0,59	**PHS 08B-3BH13**
	14	57,07	B	14	28	42	50	7,24	35,05	0,72	**PHS 08B-3BH14**
	15	61,09	B	14	31	46	50	7,24	35,05	0,81	**PHS 08B-3BH15**
	16	65,10	B	16	35	50	50	7,24	35,05	0,90	**PHS 08B-3BH16**
	17	69,11	B	16	36	54	50	7,24	35,05	1,04	**PHS 08B-3BH17**
	18	73,14	B	16	38	58	50	7,24	35,05	1,22	**PHS 08B-3BH18**
	19	77,16	B	16	40	62	50	7,24	35,05	1,41	**PHS 08B-3BH19**
	20	81,19	B	16	40	66	50	7,24	35,05	1,58	**PHS 08B-3BH20**
	21	85,22	B	16	45	70	55	7,24	35,05	1,81	**PHS 08B-3BH21**
	22	89,24	B	16	45	70	55	7,24	35,05	2,03	**PHS 08B-3BH22**
	23	93,27	B	16	45	70	55	7,24	35,05	2,27	**PHS 08B-3BH23**
	24	97,29	B	16	50	75	55	7,24	35,05	2,44	**PHS 08B-3BH24**
	25	101,33	B	16	52	80	55	7,24	35,05	2,54	**PHS 08B-3BH25**

Maximum bores can accommodate standard keyways. Larger bores are available where a shallow keyway is used or no keyway is required.
All Type B or C sprockets, up to and including 25 tooth, are with hardened teeth as standard.
For any additional size sprockets with hardened teeth, add "H" before the number of teeth, e.g. PHS 06B-3BH12.

Metric sprockets, triplex, standard

ISO 08B-3 · 12,70 mm pitch | ISO 10B-3 · 15,88 mm pitch | ISO 12B-3 · 19,05 mm pitch

Pitch	Number of teeth	Pitch diameter	Type	Dimensions Bore		Hub		Plate thickness		Mass	Designation
		PD		Min.	Max.	H	L	t_1	t_2		
mm	–	mm	–	mm						kg	–
12,70	**26**	105,36	B	20	56	85	55	7,24	35,05	2,85	**PHS 08B-3B26**
	27	109,40	B	20	56	85	55	7,24	35,05	2,85	**PHS 08B-3B27**
	28	113,42	B	20	60	90	55	7,24	35,05	3,16	**PHS 08B-3B28**
	29	117,46	B	20	62	95	55	7,24	35,05	3,34	**PHS 08B-3B29**
	30	121,50	B	20	64	100	55	7,24	35,05	3,48	**PHS 08B-3B30**
	35	141,68	B	20	73	110	55	7,24	35,05	4,79	**PHS 08B-3B35**
	36	145,72	B	25	80	120	55	7,24	35,05	5,43	**PHS 08B-3B36**
	38	153,80	B	25	80	120	55	7,24	35,05	6,49	**PHS 08B-3B38**
	42	169,95	B	25	80	120	60	7,24	35,05	7,17	**PHS 08B-3B42**
	45	182,07	B	25	80	120	60	7,24	35,05	7,69	**PHS 08B-3B45**
	48	194,18	B	25	80	120	60	7,24	35,05	8,20	**PHS 08B-3B48**
	52	210,34	B	25	80	120	60	7,24	35,05	8,88	**PHS 08B-3B52**
	54	218,43	B	25	80	120	60	7,24	35,05	9,22	**PHS 08B-3B54**
	57	230,54	B	25	80	120	60	7,24	35,05	12,62	**PHS 08B-3B57**
	60	242,66	B	25	85	120	60	7,24	35,05	13,84	**PHS 08B-3B60**
	68	274,99	B	25	85	120	60	7,24	35,05	15,69	**PHS 08B-3B68**
	72	291,16	B	25	85	120	60	7,24	35,05	16,61	**PHS 08B-3B72**
	76	307,33	B	25	85	120	60	7,24	35,05	22,23	**PHS 08B-3B76**
	84	339,65	B	25	85	120	60	7,24	35,05	24,57	**PHS 08B-3B84**
	95	384,11	B	25	85	120	60	7,24	35,05	33,11	**PHS 08B-3B95**
	114	460,90	B	25	85	120	60	7,24	35,05	41,90	**PHS 08B-3B114**
15,88	**11**	56,34	B	16	24	39	55	8,97	42,14	0,68	**PHS 10B-3BH11**
	12	61,34	B	16	29	44	55	8,97	42,14	0,82	**PHS 10B-3BH12**
	13	66,32	B	16	34	49	55	8,97	42,14	1,05	**PHS 10B-3BH13**
	14	71,34	B	16	35	54	55	8,97	42,14	1,23	**PHS 10B-3BH14**
	15	76,36	B	16	38	59	55	8,97	42,14	1,36	**PHS 10B-3BH15**
	16	81,37	B	16	42	64	60	8,97	42,14	1,55	**PHS 10B-3BH16**
	17	86,38	B	16	45	69	60	8,97	42,14	1,81	**PHS 10B-3BH17**
	18	91,42	B	16	48	74	60	8,97	42,14	2,09	**PHS 10B-3BH18**
	19	96,45	B	16	52	79	60	8,97	42,14	2,40	**PHS 10B-3BH19**
	20	101,49	B	16	56	84	60	8,97	42,14	2,72	**PHS 10B-3BH20**
	21	106,52	B	20	56	85	60	8,97	42,14	3,04	**PHS 10B-3BH21**
	22	111,55	B	20	60	90	60	8,97	42,14	3,36	**PHS 10B-3BH22**
	23	116,58	B	20	62	95	60	8,97	42,14	3,67	**PHS 10B-3BH23**
	24	121,62	B	20	64	100	60	8,97	42,14	4,00	**PHS 10B-3BH24**
	25	126,66	B	20	68	105	60	8,97	42,14	4,31	**PHS 10B-3BH25**
	26	131,70	B	20	73	110	60	8,97	42,14	5,18	**PHS 10B-3B26**
	27	136,75	B	20	73	110	60	8,97	42,14	5,63	**PHS 10B-3B27**
	28	141,78	B	20	76	115	60	8,97	42,14	6,04	**PHS 10B-3B28**
	29	146,83	B	20	76	115	60	8,97	42,14	6,22	**PHS 10B-3B29**
	30	151,87	B	20	80	120	60	8,97	42,14	6,36	**PHS 10B-3B30**
	32	161,95	B	20	80	120	60	8,97	42,14	7,26	**PHS 10B-3B32**
	35	177,10	B	20	80	120	60	8,97	42,14	8,60	**PHS 10B-3B35**
	36	182,15	B	25	80	120	60	8,97	42,14	9,34	**PHS 10B-3B36**
	38	192,24	B	25	80	120	60	8,97	42,14	11,03	**PHS 10B-3B38**
	45	227,58	B	25	80	130	60	8,97	42,14	14,94	**PHS 10B-3B45**
	48	242,73	B	25	80	130	60	8,97	42,14	16,62	**PHS 10B-3B48**
	57	288,18	B	25	80	130	64	8,97	42,14	21,77	**PHS 10B-3B57**
	60	303,32	B	25	80	130	67	8,97	42,14	22,22	**PHS 10B-3B60**
	76	384,16	C	25	80	130	67	8,97	42,14	23,13	**PHS 10B-3C76**
	80	404,35	C	25	80	130	67	8,97	42,14	25,14	**PHS 10B-3C80**
	95	480,14	C	25	80	130	67	8,97	42,14	32,66	**PHS 10B-3C95**
	114	576,13	C	25	80	130	67	8,97	42,14	44,76	**PHS 10B-3C114**
19,05	**11**	67,61	B	20	32	47	70	10,87	49,78	1,13	**PHS 12B-3BH11**
	12	73,61	B	20	36	53	70	10,87	49,78	1,50	**PHS 12B-3BH12**
	13	79,59	B	20	38	59	70	10,87	49,78	1,77	**PHS 12B-3BH13**
	14	85,61	B	20	42	65	70	10,87	49,78	2,04	**PHS 12B-3BH14**
	15	91,63	B	20	45	71	70	10,87	49,78	2,45	**PHS 12B-3BH15**
	16	97,65	B	20	51	77	70	10,87	49,78	2,95	**PHS 12B-3BH16**
	17	103,67	B	20	54	83	70	10,87	49,78	3,49	**PHS 12B-3BH17**
	18	109,71	B	20	60	89	70	10,87	49,78	3,86	**PHS 12B-3BH18**
	19	115,75	B	20	62	95	70	10,87	49,78	4,54	**PHS 12B-3BH19**
	20	121,78	B	20	64	100	70	10,87	49,78	5,08	**PHS 12B-3BH20**
	21	127,82	B	20	64	100	70	10,87	49,78	5,67	**PHS 12B-3BH21**
	22	133,86	B	20	64	100	70	10,87	49,78	5,99	**PHS 12B-3BH22**
	23	139,90	B	20	73	110	70	10,87	49,78	6,62	**PHS 12B-3BH23**
	24	145,94	B	20	73	110	70	10,87	49,78	7,17	**PHS 12B-3BH24**
	25	152,00	B	20	80	120	70	10,87	49,78	7,71	**PHS 12B-3BH25**
	26	158,04	B	20	80	120	70	10,87	49,78	8,44	**PHS 12B-3B26**
	27	164,09	B	20	80	120	70	10,87	49,78	8,99	**PHS 12B-3B27**
	28	170,13	B	20	80	120	70	10,87	49,78	9,49	**PHS 12B-3B28**
	29	176,19	B	20	80	120	70	10,87	49,78	9,99	**PHS 12B-3B29**
	30	182,25	B	20	80	120	70	10,87	49,78	10,53	**PHS 12B-3B30**

Maximum bores can accommodate standard keyways. Larger bores are available where a shallow keyway is used or no keyway is required.
All Type B or C sprockets, up to and including 25 tooth, are with hardened teeth as standard.
For any additional size sprockets with hardened teeth, add "H" before the number of teeth, e.g. PHS 06B-3BH12.

Metric sprockets, triplex, standard

ISO 12B-3 · 19,05 mm pitch | ISO 16B-3 · 25,40 mm pitch | ISO 20B-3 · 31,75 mm pitch

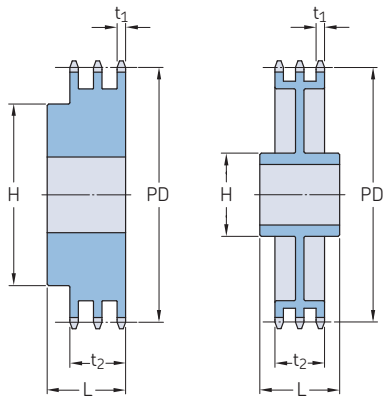

Pitch	Number of teeth	Pitch diameter	Type	Dimensions Bore		Hub		Plate thickness		Mass	Designation
		PD		Min.	Max.	H	L	t_1	t_2		
mm	–	mm	–	mm						kg	–
19,05	**35**	212,52	B	25	85	130	70	10,87	49,78	18,95	**PHS 12B-3B35**
	36	218,58	B	25	85	130	70	10,87	49,78	19,49	**PHS 12B-3B36**
	38	230,69	B	25	85	130	70	10,87	49,78	20,57	**PHS 12B-3B38**
	45	273,10	B	25	85	140	70	10,87	49,78	24,36	**PHS 12B-3B45**
	48	291,27	B	25	85	140	70	10,87	49,78	25,98	**PHS 12B-3B48**
	57	345,81	B	25	82	140	70	10,87	49,78	33,73	**PHS 12B-3B57**
	60	363,99	C	25	82	140	70	10,87	49,78	35,51	**PHS 12B-3C60**
	68	412,49	C	25	82	140	70	10,87	49,78	40,24	**PHS 12B-3C68**
	76	460,99	C	25	95	140	70	10,87	49,78	37,19	**PHS 12B-3C76**
	80	485,22	C	25	95	140	70	10,87	49,78	39,15	**PHS 12B-3C80**
	95	576,17	C	25	95	140	70	10,87	49,78	47,63	**PHS 12B-3C95**
25,40	**10**	90,14	B	20	42	56	95	15,82	79,58	1,85	**PHS 16B-3BH10**
	11	90,14	B	25	42	64	100	15,82	79,58	3,59	**PHS 16B-3BH11**
	12	98,14	B	25	45	72	100	15,82	79,58	3,59	**PHS 16B-3BH12**
	13	106,12	B	25	52	80	100	15,82	79,58	4,13	**PHS 16B-3BH13**
	14	114,15	B	25	58	88	100	15,82	79,58	4,68	**PHS 16B-3BH14**
	15	122,17	B	25	62	96	100	15,82	79,58	5,54	**PHS 16B-3BH15**
	16	130,20	B	25	66	104	100	15,82	79,58	6,81	**PHS 16B-3BH16**
	17	138,22	B	25	74	112	100	15,82	79,58	8,07	**PHS 16B-3BH17**
	18	146,28	B	25	80	120	100	15,82	79,58	9,99	**PHS 16B-3BH18**
	19	154,33	B	25	84	128	100	15,82	79,58	10,89	**PHS 16B-3BH19**
	20	162,38	B	25	85	130	100	15,82	79,58	11,80	**PHS 16B-3BH20**
	21	170,43	B	25	85	130	100	15,82	79,58	13,61	**PHS 16B-3BH21**
	22	178,48	B	25	85	130	100	15,82	79,58	14,07	**PHS 16B-3BH22**
	23	186,53	B	25	85	130	100	15,82	79,58	14,97	**PHS 16B-3BH23**
	24	194,59	B	25	85	130	100	15,82	79,58	16,34	**PHS 16B-3BH24**
	25	202,66	B	25	85	130	100	15,82	79,58	17,70	**PHS 16B-3BH25**
	26	210,72	B	30	85	130	100	15,82	79,58	19,98	**PHS 16B-3B26**
	27	218,79	B	30	85	130	100	15,82	79,58	21,57	**PHS 16B-3B27**
	28	226,85	B	30	85	130	100	15,82	79,58	23,15	**PHS 16B-3B28**
	29	234,92	B	30	85	130	100	15,82	79,58	24,74	**PHS 16B-3B29**
	30	243,00	B	30	95	136	100	15,82	79,58	26,33	**PHS 16B-3B30**
	35	283,36	B	30	95	140	100	15,82	79,58	36,06	**PHS 16B-3B35**
	36	291,44	B	30	95	140	100	15,82	79,58	38,06	**PHS 16B-3B36**
	38	307,59	C	30	97	140	100	15,82	79,58	38,22	**PHS 16B-3C38**
	42	339,89	C	30	97	160	100	15,82	79,58	38,51	**PHS 16B-3C42**
	45	364,13	C	30	97	160	100	15,82	79,58	41,77	**PHS 16B-3C45**
	57	461,07	C	30	107	180	110	15,82	79,58	54,80	**PHS 16B-3C57**
	60	485,32	C	30	107	180	110	15,82	79,58	58,06	**PHS 16B-3C60**
	68	549,98	C	30	107	180	110	15,82	79,58	63,50	**PHS 16B-3C68**
	76	614,65	C	30	107	180	110	15,82	79,58	74,52	**PHS 16B-3C76**
	95	768,22	C	30	114	180	110	15,82	79,58	100,70	**PHS 16B-3C95**
	114	921,81	C	30	114	180	110	15,82	79,58	120,84	**PHS 16B-3C114**
31,75	**10**	102,75	B	20	47	70	110	18,19	91,08	3,95	**PHS 20B-3BH10**
	11	112,70	B	20	52	80	115	18,19	91,08	5,26	**PHS 20B-3BH11**
	12	122,67	B	20	60	90	115	18,19	91,08	6,21	**PHS 20B-3BH12**
	13	132,67	B	20	64	100	115	18,19	91,08	9,26	**PHS 20B-3BH13**
	14	142,68	B	20	73	110	115	18,19	91,08	9,76	**PHS 20B-3BH14**
	15	152,71	B	20	80	120	115	18,19	91,08	10,81	**PHS 20B-3BH15**
	16	162,75	B	25	80	120	115	18,19	91,08	12,76	**PHS 20B-3BH16**
	17	172,79	B	25	80	120	115	18,19	91,08	14,76	**PHS 20B-3BH17**
	18	182,84	B	25	80	120	115	18,19	91,08	16,71	**PHS 20B-3BH18**
	19	192,90	B	25	80	120	115	18,19	91,08	19,13	**PHS 20B-3BH19**

Maximum bores can accommodate standard keyways. Larger bores are available where a shallow keyway is used or no keyway is required.
All Type B or C sprockets, up to and including 25 tooth, are with hardened teeth as standard.
For any additional size sprockets with hardened teeth, add "H" before the number of teeth, e.g. PHS 06B-3BH12.

Metric sprockets, triplex, standard

ISO 20B-3 · 31,75 mm pitch

Pitch	Number of teeth	Pitch diameter	Type	Dimensions Bore		Hub		Plate thickness		Mass	Designation
		PD		Min.	Max.	H	L	t_1	t_2		
mm	–	mm	–	mm						kg	–
31,75	**20**	202,96	B	25	80	120	115	18,19	91,08	21,57	**PHS 20B-3BH20**
	21	213,03	B	25	92	140	115	18,19	91,08	23,36	**PHS 20B-3BH21**
	22	223,10	B	25	92	140	115	18,19	91,08	25,65	**PHS 20B-3BH22**
	23	233,17	B	25	92	140	115	18,19	91,08	27,90	**PHS 20B-3BH23**
	24	243,25	B	25	95	140	115	18,19	91,08	27,19	**PHS 20B-3BH24**
	25	253,32	B	25	95	140	115	18,19	91,08	27,90	**PHS 20B-3BH25**
	26	263,41	B	25	95	150	115	18,19	91,08	31,90	**PHS 20B-3B26**
	27	273,49	B	25	95	150	115	18,19	91,08	35,90	**PHS 20B-3B27**
	28	283,57	B	25	95	150	115	18,19	91,08	39,90	**PHS 20B-3B28**
	30	303,75	B	25	95	150	115	18,19	91,08	47,90	**PHS 20B-3B30**
	32	323,92	B	30	95	150	115	18,19	91,08	51,57	**PHS 20B-3B32**
	35	354,20	C	30	97	150	115	18,19	91,08	57,29	**PHS 20B-3C35**
	36	364,29	C	30	97	150	115	18,19	91,08	59,35	**PHS 20B-3C36**
	38	384,48	C	30	97	150	115	18,19	91,08	62,56	**PHS 20B-3C38**
	42	424,86	C	30	97	160	110	18,19	91,08	70,12	**PHS 20B-3C42**
	45	455,15	C	30	97	160	110	18,19	91,08	75,84	**PHS 20B-3C45**
	57	576,35	C	30	102	180	123	18,19	91,08	100,11	**PHS 20B-3C57**
	60	606,66	C	30	102	180	123	18,19	91,08	104,86	**PHS 20B-3C60**
	68	687,48	C	30	102	200	123	18,19	91,08	117,54	**PHS 20B-3C68**
	76	768,30	C	30	102	200	123	18,19	91,08	130,21	**PHS 20B-3C76**
	80	808,71	C	30	102	200	123	18,19	91,08	136,55	**PHS 20B-3C80**
	95	960,28	C	30	102	200	123	18,19	91,08	160,31	**PHS 20B-3C95**
	114	1 152,27	C	30	102	200	126	18,19	91,08	190,41	**PHS 20B-3C114**

Maximum bores can accommodate standard keyways. Larger bores are available where a shallow keyway is used or no keyway is required.
All Type B or C sprockets, up to and including 25 tooth, are with hardened teeth as standard.
For any additional size sprockets with hardened teeth, add "H" before the number of teeth, e.g. PHS 06B-3BH12.

Metric sprockets, triplex, taper bushed

ISO 12B-3 · 19,05 mm pitch | ISO 16B-3 · 25,40 mm pitch

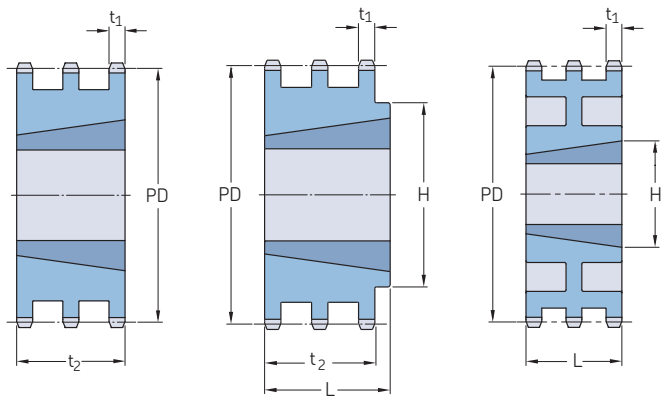

Type A Type B Type C

Pitch	Number of teeth	Pitch diameter	Type	Bushing number	Dimensions Bore				Plate thickness		Mass	Designation
		PD			Min.	Max.	L	H	t_1	t_2		
mm	–	mm	–	–	mm						kg	–
19,05	**17**	103,67	A	2012	14	50	–	–	10,87	49,78	1,28	**PHS 12B-3TBH17**
	19	115,75	A	2517	16	65	–	–	10,87	49,78	2,02	**PHS 12B-3TBH19**
	21	127,82	A	2517	16	65	–	–	10,87	49,78	2,09	**PHS 12B-3TBH21**
	23	139,90	A	2517	16	65	–	–	10,87	49,78	3,00	**PHS 12B-3TBH23**
	25	152,00	A	3020	25	75	–	–	10,87	49,78	3,97	**PHS 12B-3TBH25**
	27	164,09	B	3020	25	75	140	51,0	10,87	49,78	3,83	**PHS 12B-3TB27**
	30	182,25	B	3020	25	75	140	51,0	10,87	49,78	5,72	**PHS 12B-3TB30**
	38	230,69	B	3020	25	75	140	51,0	10,87	49,78	7,76	**PHS 12B-3TB38**
	45	273,10	C	3020	25	75	140	51,0	10,87	49,78	10,04	**PHS 12B-3TB45**
	57	345,81	C	3020	25	75	140	51,0	10,87	49,78	14,42	**PHS 12B-3TB57**
	76	460,99	C	3020	25	75	140	51,0	10,87	49,78	25,50	**PHS 12B-3TB76**
	95	576,17	C	3030	25	75	140	76,0	10,87	49,78	36,58	**PHS 12B-3TB95**
	114	691,36	C	3030	25	75	140	76,0	10,87	49,78	47,66	**PHS 12B-3TB114**
25,40	**17**	138,22	A	2517	16	65	–	–	15,82	79,58	4,20	**PHS 16B-3TBH17**
	19	154,33	B	3020	35	75	–	76,2	15,82	79,58	4,30	**PHS 16B-3TBH19**
	21	170,43	B	3020	35	75	–	76,2	15,82	79,58	6,60	**PHS 16B-3TBH21**
	23	186,53	B	3525	35	100	–	65,0	15,82	79,58	7,00	**PHS 16B-3TBH23**
	25	202,66	B	3525	35	100	–	65,0	15,82	79,58	9,80	**PHS 16B-3TBH25**
	27	218,79	B	3525	35	100	–	65,0	15,82	79,58	12,80	**PHS 16B-3TB27**
	30	243,00	B	3525	35	100	–	65,0	15,82	79,58	18,00	**PHS 16B-3TB30**
	38	307,59	B	3535	35	100	178	89,0	15,82	79,58	21,50	**PHS 16B-3TB38**
	45	364,13	C	4040	40	115	216	102,0	15,82	79,58	33,50	**PHS 16B-3TB45**
	57	461,07	C	4040	40	115	216	102,0	15,82	79,58	39,50	**PHS 16B-3TB57**
	76	614,65	C	4040	40	115	216	102,0	15,82	79,58	59,50	**PHS 16B-3TB76**

Maximum bores can accommodate standard keyways. Larger bores are available where a shallow keyway is used or no keyway is required.
All Type B or C sprockets, up to and including 25 tooth, are with hardened teeth as standard.
For any additional size sprockets with hardened teeth, add "H" before the number of teeth, e.g. PHS 12B-3TBH17.

ANSI sprockets, simplex, pilot bore

ANSI 25-1 · 6,35 mm (1/4") pitch

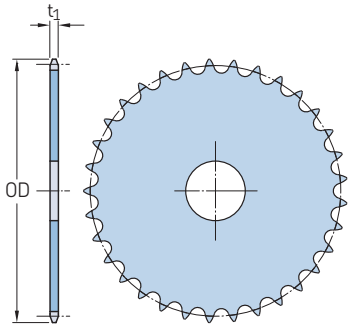

Type A

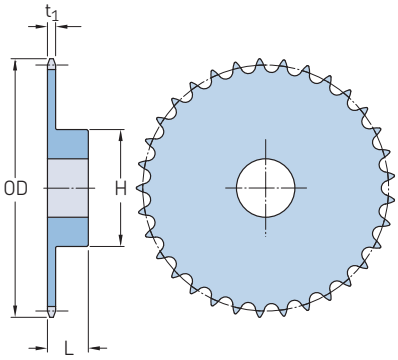

Type B

Pitch		Number of teeth	Outside diameter	Type	Dimensions Bore stock	Bore		Hub		Plate thickness	Mass	Designation
			OD			Min.	Max.	H	L	t_1		
mm	in.	–	mm	–	mm						kg	–
6,35	1/4	**9**	21,34	B	–	6,35	6,35	11,11	12,70	2,790	0,01	**PHS 25-1B9**
		10	23,37	B	–	6,35	6,35	12,70	12,70	2,790	0,01	**PHS 25-1B10**
		11	25,40	B	–	6,35	7,94	14,29	12,70	2,790	0,02	**PHS 25-1B11**
		12	27,43	B	–	6,35	9,53	15,88	12,70	2,790	0,03	**PHS 25-1B12**
		13	29,72	B	–	6,35	11,11	18,26	12,70	2,790	0,03	**PHS 25-1B13**
		14	31,75	B	–	6,35	14,29	20,64	12,70	2,790	0,04	**PHS 25-1B14**
		15	33,78	B	–	6,35	14,29	22,62	12,70	2,790	0,05	**PHS 25-1B15**
		16	35,81	B	–	6,35	14,29	24,61	12,70	2,790	0,05	**PHS 25-1B16**
		17	37,85	B	–	6,35	15,88	26,19	12,70	2,790	0,06	**PHS 25-1B17**
		18	39,88	A	6,35	–	–	–	–	2,790	0,02	**PHS 25-1A18**
			39,88	B	–	6,35	19,05	28,58	12,70	2,790	0,07	**PHS 25-1B18**
		19	41,91	A	6,35	–	–	–	–	2,790	0,02	**PHS 25-1A19**
			41,91	B	–	6,35	20,64	30,96	12,70	2,790	0,09	**PHS 25-1B19**
		20	43,94	A	6,35	–	–	–	–	2,790	0,02	**PHS 25-1A20**
			43,94	B	–	6,35	22,23	32,54	15,88	2,790	0,11	**PHS 25-1B20**
		21	45,97	A	9,53	–	–	–	–	2,790	0,02	**PHS 25-1A21**
			45,97	B	–	6,35	22,23	34,93	15,88	2,790	0,13	**PHS 25-1B21**
		22	48,01	A	9,53	–	–	–	–	2,790	0,03	**PHS 25-1A22**
			48,01	B	–	6,35	23,81	36,51	15,88	2,790	0,14	**PHS 25-1B22**
		23	50,04	A	9,53	–	–	–	–	2,790	0,03	**PHS 25-1A23**
			50,04	B	–	6,35	25,40	38,10	15,88	2,790	0,15	**PHS 25-1B23**
		24	52,07	A	9,53	–	–	–	–	2,790	0,04	**PHS 25-1A24**
			52,07	B	–	9,53	25,40	38,10	15,88	2,790	0,15	**PHS 25-1B24**
		25	54,10	A	9,53	–	–	–	–	2,790	0,04	**PHS 25-1A25**
			54,10	B	–	9,53	25,40	38,10	15,88	2,790	0,15	**PHS 25-1B25**
		26	56,13	A	9,53	–	–	–	–	2,790	0,04	**PHS 25-1A26**
			56,13	B	–	9,53	25,40	38,10	15,88	2,790	0,16	**PHS 25-1B26**
		28	60,20	A	9,53	–	–	–	–	2,790	0,05	**PHS 25-1A28**
			60,20	B	–	9,53	25,40	38,10	15,88	2,790	0,16	**PHS 25-1B28**
		30	64,26	A	9,53	–	–	–	–	2,790	0,05	**PHS 25-1A30**
			64,26	B	–	9,53	25,40	38,10	15,88	2,790	0,17	**PHS 25-1B30**
		32	68,33	A	9,53	–	–	–	–	2,790	0,06	**PHS 25-1A32**
			68,33	B	–	9,53	25,40	38,10	15,88	2,790	0,18	**PHS 25-1B32**
		35	74,42	A	9,53	–	–	–	–	2,790	0,07	**PHS 25-1A35**
		36	76,45	A	9,53	–	–	–	–	2,790	0,08	**PHS 25-1A36**
			76,45	B	–	9,53	25,40	38,10	19,05	2,790	0,23	**PHS 25-1B36**
		40	84,58	A	12,70	–	–	–	–	2,790	0,09	**PHS 25-1A40**
			84,58	B	–	12,70	34,93	50,80	19,05	2,790	0,24	**PHS 25-1B40**
		42	88,65	A	12,70	–	–	–	–	2,790	0,11	**PHS 25-1A42**

Maximum bores can accommodate standard keyways. Larger bores are available where a shallow keyway is used or no keyway is required.
All Type B or C sprockets, up to and including 25 tooth, are with hardened teeth as standard.
For any additional size sprockets with hardened teeth, add "H" before the number of teeth, e.g. PHS 25-1BH9.

ANSI sprockets, simplex, pilot bore

ANSI 25-1 · 6,35 mm (1/4") pitch | ANSI 35-1 · 9,53 mm (3/8") pitch

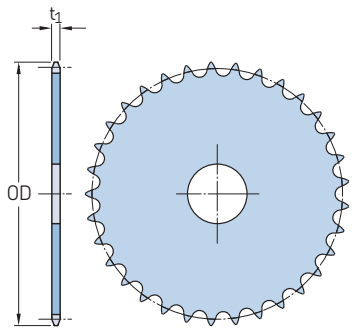

Type A

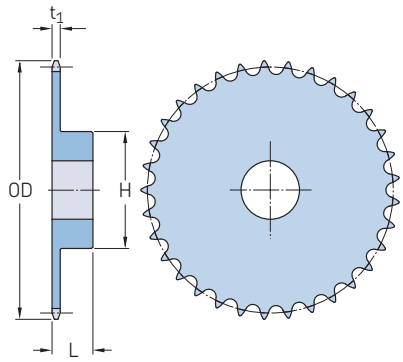

Type B

Pitch		Number of teeth	Outside diameter	Type	Dimensions						Mass	Designation
					Bore stock	Bore		Hub		Plate thickness		
			OD			Min.	Max.	H	L	t_1		
mm	in.	–	mm	–	mm						kg	–
6,35	1/4	**45**	94,74	A	12,70	–	–	–	–	2,790	0,11	**PHS 25-1A45**
			94,74	B	–	12,70	34,93	50,80	19,05	2,790	0,25	**PHS 25-1B45**
		48	100,58	A	12,70	–	–	–	–	2,790	0,15	**PHS 25-1A48**
			100,58	B	–	12,70	34,93	50,80	19,05	2,790	0,25	**PHS 25-1B48**
		54	112,78	A	12,70	–	–	–	–	2,790	0,17	**PHS 25-1A54**
			112,78	B	–	12,70	34,93	50,80	19,05	2,790	0,45	**PHS 25-1B54**
		60	124,97	A	12,70	–	–	–	–	2,790	0,24	**PHS 25-1A60**
			124,97	B	–	12,70	34,93	50,80	19,05	2,790	0,50	**PHS 25-1B60**
		70	145,29	B	–	12,70	34,93	50,80	19,05	2,790	0,57	**PHS 25-1B70**
		72	149,35	A	12,70	–	–	–	–	2,790	0,34	**PHS 25-1A72**
			149,35	B	–	12,70	34,93	50,80	19,05	2,790	0,59	**PHS 25-1B72**
9,53	3/8	**8**	28,70	B	–	9,53	9,53	19,05	19,05	4,270	0,03	**PHS 35-1BH8**
		9	32,00	B	–	9,53	9,53	21,43	19,05	4,270	0,04	**PHS 35-1BH9**
		10	35,05	B	–	9,53	14,29	24,61	19,05	4,270	0,06	**PHS 35-1BH10**
		11	38,10	B	–	9,53	14,29	26,99	19,05	4,270	0,08	**PHS 35-1BH11**
		12	41,40	B	–	12,70	14,29	30,96	19,05	4,270	0,09	**PHS 35-1BH12**
		13	44,45	B	–	12,70	17,46	31,75	19,05	4,270	0,10	**PHS 35-1BH13**
		14	47,50	B	–	12,70	22,23	31,75	19,05	4,270	0,11	**PHS 35-1BH14**
		15	50,55	A	12,70	–	–	–	–	4,270	0,05	**PHS 35-1A15**
			50,55	B	–	12,70	22,23	34,13	19,05	4,270	0,13	**PHS 35-1BH15**
		16	53,59	A	12,70	–	–	–	–	4,270	0,05	**PHS 35-1A16**
			53,59	B	–	12,70	23,81	37,31	19,05	4,270	0,16	**PHS 35-1BH16**
		17	56,64	A	12,70	–	–	–	–	4,270	0,05	**PHS 35-1A17**
			56,64	B	–	12,70	26,99	40,48	19,05	4,270	0,19	**PHS 35-1BH17**
		18	59,69	A	12,70	–	–	–	–	4,270	0,06	**PHS 35-1A18**
			59,69	B	–	12,70	30,16	43,66	19,05	4,270	0,22	**PHS 35-1BH18**
		19	62,74	A	12,70	–	–	–	–	4,270	0,07	**PHS 35-1A19**
			62,74	B	–	12,70	31,75	46,83	19,05	4,270	0,24	**PHS 35-1BH19**
		20	65,79	A	12,70	–	–	–	–	4,270	0,09	**PHS 35-1A20**
			65,79	B	–	12,70	33,34	49,21	19,05	4,270	0,27	**PHS 35-1BH20**
		21	68,83	A	12,70	–	–	–	–	4,270	0,09	**PHS 35-1A21**
			68,83	B	–	12,70	34,93	50,80	22,23	4,270	0,36	**PHS 35-1BH21**
		22	71,88	A	12,70	–	–	–	–	4,270	0,10	**PHS 35-1A22**
			71,88	B	–	12,70	34,93	50,80	22,23	4,270	0,36	**PHS 35-1BH22**
		23	74,93	A	12,70	–	–	–	–	4,270	0,11	**PHS 35-1A23**
			74,93	B	–	12,70	34,93	50,80	22,23	4,270	0,37	**PHS 35-1BH23**
		24	77,98	A	12,70	–	–	–	–	4,270	0,12	**PHS 35-1A24**
			77,98	B	–	12,70	34,93	50,80	22,23	4,270	0,40	**PHS 35-1BH24**
		25	81,03	A	12,70	–	–	–	–	4,270	0,13	**PHS 35-1A25**
			81,03	B	–	12,70	34,93	50,80	22,23	4,270	0,40	**PHS 35-1BH25**

Maximum bores can accommodate standard keyways. Larger bores are available where a shallow keyway is used or no keyway is required.
All Type B or C sprockets, up to and including 25 tooth, are with hardened teeth as standard.
For any additional size sprockets with hardened teeth, add "H" before the number of teeth, e.g. PHS 25-1BH9.

ANSI sprockets, simplex, pilot bore

ANSI 35-1 · 9,53 mm (3/8") pitch | ANSI 41-1 · 12,70 mm (1/2") pitch

Pitch		Number of teeth	Outside diameter	Type	Dimensions						Mass	Designation
					Bore stock	Bore		Hub		Plate thickness		
			OD			Min.	Max.	H	L	t_1		
mm	in.	–	mm	–	mm						kg	–
9,53	3/8	**26**	84,07	A	12,70	–	–	–	–	4,270	0,13	**PHS 35-1A26**
			84,07	B	–	12,70	34,93	50,80	22,23	4,270	0,41	**PHS 35-1B26**
		27	87,12	A	12,70	–	–	–	–	4,270	0,15	**PHS 35-1A27**
			87,12	B	–	12,70	34,93	50,80	22,23	4,270	0,43	**PHS 35-1B27**
		28	90,17	A	12,70	–	–	–	–	4,270	0,15	**PHS 35-1A28**
			90,17	B	–	12,70	34,93	50,80	22,23	4,270	0,43	**PHS 35-1B28**
		30	96,27	A	12,70	–	–	–	–	4,270	0,21	**PHS 35-1A30**
			96,27	B	–	12,70	34,93	50,80	22,23	4,270	0,46	**PHS 35-1B30**
		32	102,36	A	15,88	–	–	–	–	4,270	0,21	**PHS 35-1A32**
			102,36	B	–	12,70	34,93	50,80	22,23	4,270	0,56	**PHS 35-1B32**
		35	111,51	A	15,88	–	–	–	–	4,270	0,27	**PHS 35-1A35**
			111,51	B	–	15,88	38,10	57,15	22,23	4,270	0,68	**PHS 35-1B35**
		36	114,55	A	15,88	–	–	–	–	4,270	0,28	**PHS 35-1A36**
			114,55	B	–	15,88	38,10	57,15	22,23	4,270	0,71	**PHS 35-1B36**
		40	126,75	A	15,08	–	–	–	–	4,270	0,32	**PHS 35-1A40**
			126,75	B	–	15,88	38,10	57,15	25,40	4,270	0,73	**PHS 35-1B40**
		42	132,84	A	15,08	–	–	–	–	4,270	0,35	**PHS 35-1A42**
			132,84	B	–	15,88	38,10	57,15	25,40	4,270	0,76	**PHS 35-1B42**
		45	141,99	A	15,08	–	–	–	–	4,270	0,40	**PHS 35-1A45**
			141,99	B	–	15,88	38,10	57,15	25,40	4,270	0,81	**PHS 35-1B45**
		48	151,13	A	15,08	–	–	–	–	4,270	0,55	**PHS 35-1A48**
			151,13	B	–	15,88	38,10	57,15	25,40	4,270	0,85	**PHS 35-1B48**
		54	169,16	A	15,08	–	–	–	–	4,270	0,60	**PHS 35-1A54**
			169,16	B	–	15,88	38,10	57,15	25,40	4,270	1,00	**PHS 35-1B54**
		60	187,45	A	18,26	–	–	–	–	4,270	0,75	**PHS 35-1A60**
			187,45	B	–	19,05	38,10	57,15	25,40	4,270	1,12	**PHS 35-1B60**
		70	217,93	A	18,26	–	–	–	–	4,270	1,04	**PHS 35-1A70**
			217,93	B	–	19,05	38,10	57,15	25,40	4,270	1,42	**PHS 35-1B70**
		72	223,77	A	18,26	–	–	–	–	4,270	1,16	**PHS 35-1A72**
			223,77	B	–	19,05	38,10	57,15	25,40	4,270	1,55	**PHS 35-1B72**
		80	248,16	A	18,26	–	–	–	–	4,270	1,43	**PHS 35-1A80**
			248,16	B	–	19,05	38,10	57,15	25,40	4,270	1,73	**PHS 35-1B80**
		84	260,35	A	18,26	–	–	–	–	4,270	1,48	**PHS 35-1A84**
			260,35	B	–	19,05	38,10	57,15	25,40	4,270	1,92	**PHS 35-1B84**
		96	296,67	A	18,26	–	–	–	–	4,270	2,10	**PHS 35-1A96**
			296,67	B	–	19,05	38,10	57,15	25,40	4,270	2,34	**PHS 35-1B96**
		112	345,19	A	18,26	–	–	–	–	4,270	2,29	**PHS 35-1A112**
			345,19	B	–	19,05	38,10	57,15	25,40	4,270	3,04	**PHS 35-1B112**
12,70	1/2	**6**	29,72	B	–	9,53	9,53	16,67	22,23	5,770	0,03	**PHS 41-1BH6**
		7	34,04	B	–	9,53	9,53	19,05	22,23	5,770	0,05	**PHS 41-1BH7**
		8	38,35	B	–	12,70	12,70	25,00	22,23	5,770	0,09	**PHS 41-1BH8**
		9	42,42	B	–	12,70	15,88	28,58	22,23	5,770	0,09	**PHS 41-1BH9**
		10	46,74	B	–	12,70	19,05	31,75	22,23	5,770	0,12	**PHS 41-1BH10**
		11	50,80	B	–	12,70	22,23	36,51	22,23	5,770	0,16	**PHS 41-1BH11**
		12	55,12	B	–	12,70	23,81	39,69	22,23	5,770	0,20	**PHS 41-1BH12**
		13	59,18	B	–	12,70	25,40	39,69	22,23	5,770	0,23	**PHS 41-1BH13**
		14	63,25	B	–	12,70	31,75	44,45	22,23	5,770	0,26	**PHS 41-1BH14**
		15	67,31	A	15,88	–	–	–	–	5,770	0,13	**PHS 41-1A15**
			67,31	B	–	12,70	33,34	55,56	22,23	5,770	0,33	**PHS 41-1BH15**
		16	71,37	A	15,88	–	–	–	–	5,770	0,15	**PHS 41-1A16**
			71,37	B	–	15,88	34,93	52,39	22,23	5,770	0,41	**PHS 41-1BH16**
		17	75,44	A	15,88	–	–	–	–	5,770	0,16	**PHS 41-1A17**
			75,44	B	–	15,88	38,10	56,75	25,40	5,770	0,49	**PHS 41-1BH17**
		18	79,76	A	15,88	–	–	–	–	5,770	0,20	**PHS 41-1A18**
			79,76	B	–	15,88	41,28	60,33	25,40	5,770	0,57	**PHS 41-1BH18**
		19	83,82	A	15,88	–	–	–	–	5,770	0,21	**PHS 41-1A19**

Maximum bores can accommodate standard keyways. Larger bores are available where a shallow keyway is used or no keyway is required.
All Type B or C sprockets, up to and including 25 tooth, are with hardened teeth as standard.
For any additional size sprockets with hardened teeth, add "H" before the number of teeth, e.g. PHS 25-1BH9.

ANSI sprockets, simplex, pilot bore

ANSI 41-1 · 12,70 mm (1/2") pitch

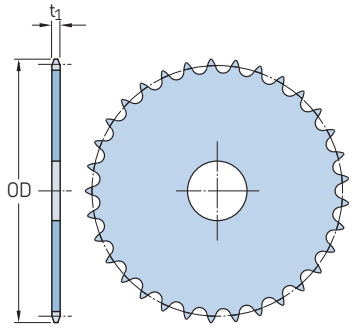

Type A

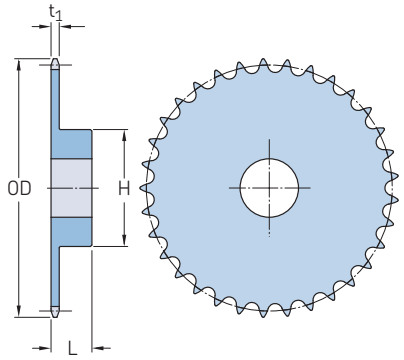

Type B

Pitch		Number of teeth	Outside diameter	Type	Dimensions						Mass	Designation
					Bore stock	Bore		Hub		Plate thickness		
			OD			Min.	Max.	H	L	t_1		
mm	in.	–	mm	–	mm						kg	–
12,70	1/2	**19**	83,82	B	–	15,88	44,45	62,71	25,40	5,770	0,68	**PHS 41-1BH19**
		20	87,88	A	15,88	–	–	–	–	5,770	0,24	**PHS 41-1A20**
			87,88	B	–	15,88	47,63	69,85	25,40	5,770	0,74	**PHS 41-1BH20**
		21	91,95	A	15,88	–	–	–	–	5,770	0,27	**PHS 41-1A21**
			91,95	B	–	15,88	47,63	73,03	25,40	5,770	0,82	**PHS 41-1BH21**
		22	96,01	A	15,88	–	–	–	–	5,770	0,30	**PHS 41-1A22**
			96,01	B	–	15,88	50,80	76,20	25,40	5,770	0,88	**PHS 41-1BH22**
		23	100,08	A	15,88	–	–	–	–	5,770	0,33	**PHS 41-1A23**
			100,08	B	–	15,88	57,15	80,96	25,40	5,770	1,02	**PHS 41-1BH23**
		24	104,14	A	15,88	–	–	–	–	5,770	0,37	**PHS 41-1A24**
			104,14	B	–	15,88	57,15	82,55	25,40	5,770	1,06	**PHS 41-1BH24**
		25	108,20	A	15,88	–	–	–	–	5,770	0,40	**PHS 41-1A25**
			108,20	B	–	15,88	57,15	82,55	25,40	5,770	1,12	**PHS 41-1BH25**
		26	112,27	A	15,88	–	–	–	–	5,770	0,43	**PHS 41-1A26**
			112,27	B	–	15,88	57,15	82,55	25,40	5,770	1,13	**PHS 41-1B26**
		27	116,33	A	15,88	–	–	–	–	5,770	0,45	**PHS 41-1A27**
			116,33	B	–	15,88	57,15	82,55	25,40	5,770	1,16	**PHS 41-1B27**
		28	120,40	A	15,88	–	–	–	–	5,770	0,49	**PHS 41-1A28**
			120,40	B	–	15,88	57,15	82,55	25,40	5,770	1,20	**PHS 41-1B28**
		30	128,52	A	15,08	–	–	–	–	5,770	0,54	**PHS 41-1A30**
			128,52	B	–	15,88	57,15	82,55	25,40	5,770	1,27	**PHS 41-1B30**
		32	136,65	A	15,08	–	–	–	–	5,770	0,65	**PHS 41-1A32**
			136,65	B	–	15,88	57,15	82,55	25,40	5,770	1,34	**PHS 41-1B32**
		35	148,84	A	15,08	–	–	–	–	5,770	0,77	**PHS 41-1A35**
			148,84	B	–	15,88	60,33	82,55	25,40	5,770	1,42	**PHS 41-1B35**
		36	152,91	A	15,08	–	–	–	–	5,770	0,83	**PHS 41-1A36**
			152,91	B	–	15,88	60,33	82,55	25,40	5,770	1,51	**PHS 41-1B36**
		40	168,91	A	18,26	–	–	–	–	5,770	1,01	**PHS 41-1A40**
			168,91	B	–	19,05	60,33	82,55	26,99	5,770	1,84	**PHS 41-1B40**
		42	177,04	A	18,26	–	–	–	–	5,770	1,13	**PHS 41-1A42**
			177,04	B	–	19,05	60,33	88,90	26,99	5,770	1,86	**PHS 41-1B42**
		45	189,23	A	18,26	–	–	–	–	5,770	1,14	**PHS 41-1A45**
			189,23	B	–	19,05	60,33	88,90	26,99	5,770	1,90	**PHS 41-1B45**
		48	201,42	A	18,26	–	–	–	–	5,770	1,32	**PHS 41-1A48**
			201,42	B	–	19,05	60,33	88,90	26,99	5,770	2,23	**PHS 41-1B48**
		54	225,55	A	18,26	–	–	–	–	5,770	1,61	**PHS 41-1A54**
			225,55	B	–	19,05	60,33	88,90	26,99	5,770	2,58	**PHS 41-1B54**
		60	249,94	A	18,26	–	–	–	–	5,770	2,09	**PHS 41-1A60**
			249,94	B	–	19,05	60,33	88,90	26,99	5,770	3,08	**PHS 41-1B60**
		70	290,32	A	18,26	–	–	–	–	5,770	2,82	**PHS 41-1A70**
			290,32	B	–	19,05	69,85	101,60	30,16	5,770	4,33	**PHS 41-1B70**
		72	298,45	A	18,26	–	–	–	–	5,770	2,87	**PHS 41-1A72**
			298,45	B	–	19,05	69,85	101,60	30,16	5,770	4,37	**PHS 41-1B72**

Maximum bores can accommodate standard keyways. Larger bores are available where a shallow keyway is used or no keyway is required.
All Type B or C sprockets, up to and including 25 tooth, are with hardened teeth as standard.
For any additional size sprockets with hardened teeth, add "H" before the number of teeth, e.g. PHS 25-1BH9.

ANSI sprockets, simplex, pilot bore

ANSI 41-1 · 12,70 mm (1/2") pitch | ANSI 40-1 · 12,70 mm (1/2") pitch

Pitch		Number of teeth	Outside diameter	Type	Dimensions						Mass	Designation
					Bore stock	Bore		Hub		Plate thickness		
			OD			Min.	Max.	H	L	t_1		
mm	in.	–	mm	–	mm						kg	–
12,70	1/2	**80**	330,96	A	18,26	–	–	–	–	5,770	3,84	**PHS 41-1A80**
			330,96	B	–	19,05	69,85	101,60	30,16	5,770	5,23	**PHS 41-1B80**
		84	346,96	A	18,26	–	–	–	–	5,770	4,14	**PHS 41-1A84**
			346,96	B	–	19,05	69,85	101,60	30,16	5,770	5,53	**PHS 41-1B84**
		96	395,48	A	23,81	–	–	–	–	5,770	5,37	**PHS 41-1A96**
			395,48	B	–	25,40	69,85	101,60	30,16	5,770	6,74	**PHS 41-1B96**
		112	460,25	A	23,81	–	–	–	–	5,770	7,18	**PHS 41-1A112**
			460,25	B	–	25,40	69,85	101,60	30,16	5,770	8,69	**PHS 41-1B112**
		8	38,10	B	–	12,70	12,70	24,61	22,23	7,210	0,08	**PHS 40-1BH8**
		9	42,42	B	–	12,70	14,29	26,99	22,23	7,210	0,09	**PHS 40-1BH9**
		10	46,74	B	–	12,70	19,05	31,75	22,23	7,210	0,12	**PHS 40-1BH10**
		11	50,80	B	–	12,70	22,23	34,93	22,23	7,210	0,16	**PHS 40-1BH11**
		12	55,12	A	12,70	–	–	–	–	7,210	0,08	**PHS 40-1A12**
			55,12	B	–	12,70	25,40	39,69	22,23	7,210	0,20	**PHS 40-1BH12**
		13	59,18	A	12,70	–	–	–	–	7,210	0,10	**PHS 40-1A13**
			59,18	B	–	12,70	26,99	39,69	22,23	7,210	0,23	**PHS 40-1BH13**
		14	63,25	A	12,70	–	–	–	–	7,210	0,12	**PHS 40-1A14**
			63,25	B	–	12,70	28,58	42,86	22,23	7,210	0,27	**PHS 40-1BH14**
		15	67,31	A	15,88	–	–	–	–	7,210	0,14	**PHS 40-1A15**
			67,31	B	–	12,70	31,75	46,04	22,23	7,210	0,32	**PHS 40-1BH15**
		16	71,37	A	15,88	–	–	–	–	7,210	0,15	**PHS 40-1A16**
			71,37	B	–	15,88	34,93	50,80	22,23	7,210	0,36	**PHS 40-1BH16**
		17	75,69	A	15,88	–	–	–	–	7,210	0,16	**PHS 40-1A17**
			75,69	B	–	15,88	36,51	53,98	25,40	7,210	0,47	**PHS 40-1BH17**
		18	79,76	A	15,88	–	–	–	–	7,210	0,20	**PHS 40-1A18**
			79,76	B	–	15,88	38,10	58,74	25,40	7,210	0,55	**PHS 40-1BH18**
		19	83,82	A	15,88	–	–	–	–	7,210	0,21	**PHS 40-1A19**
			83,82	B	–	15,88	44,45	63,50	25,40	7,210	0,65	**PHS 40-1BH19**
		20	87,88	A	15,88	–	–	–	–	7,210	0,25	**PHS 40-1A20**
			87,88	B	–	15,88	47,63	66,68	25,40	7,210	0,71	**PHS 40-1BH20**
		21	91,95	A	15,88	–	–	–	–	7,210	0,26	**PHS 40-1A21**
			91,95	B	–	15,88	47,63	69,85	25,40	7,210	0,78	**PHS 40-1BH21**
		22	96,01	A	15,88	–	–	–	–	7,210	0,30	**PHS 40-1A22**
			96,01	B	–	15,88	47,63	73,03	25,40	7,210	0,89	**PHS 40-1BH22**
		23	100,08	A	15,88	–	–	–	–	7,210	0,33	**PHS 40-1A23**
			100,08	B	–	15,88	50,80	76,20	25,40	7,210	0,97	**PHS 40-1BH23**
		24	104,14	A	15,88	–	–	–	–	7,210	0,37	**PHS 40-1A24**
			104,14	B	–	15,88	57,15	82,55	25,40	7,210	1,09	**PHS 40-1BH24**
		25	108,20	A	15,88	–	–	–	–	7,210	0,40	**PHS 40-1A25**
			108,20	B	–	15,88	57,15	82,55	25,40	7,210	1,15	**PHS 40-1BH25**
		26	112,27	A	15,88	–	–	–	–	7,210	0,43	**PHS 40-1A26**
			112,27	B	–	15,88	57,15	82,55	25,40	7,210	1,17	**PHS 40-1B26**
		27	116,33	A	15,88	–	–	–	–	7,210	0,44	**PHS 40-1A27**
			116,33	B	–	15,88	57,15	82,55	25,40	7,210	1,21	**PHS 40-1B27**
		28	120,40	A	15,88	–	–	–	–	7,210	0,50	**PHS 40-1A28**
			120,40	B	–	15,88	57,15	82,55	25,40	7,210	1,24	**PHS 40-1B28**
		29	124,46	A	15,08	–	–	–	–	7,210	0,55	**PHS 40-1A29**
			124,46	B	–	15,88	57,15	82,55	25,40	7,210	1,27	**PHS 40-1B29**
		30	128,52	A	15,08	–	–	–	–	7,210	0,57	**PHS 40-1A30**
			128,52	B	–	15,88	57,15	82,55	25,40	7,210	1,35	**PHS 40-1B30**
		31	132,59	A	15,08	–	–	–	–	7,210	0,64	**PHS 40-1A31**
			132,59	B	–	15,88	57,15	82,55	25,40	7,210	1,41	**PHS 40-1B31**
		32	136,65	A	15,08	–	–	–	–	7,210	0,67	**PHS 40-1A32**
			136,65	B	–	15,88	57,15	82,55	25,40	7,210	1,43	**PHS 40-1B32**
		33	140,72	A	15,08	–	–	–	–	7,210	0,71	**PHS 40-1A33**
			140,72	B	–	15,88	57,15	82,55	25,40	7,210	1,46	**PHS 40-1B33**
		34	144,78	A	15,08	–	–	–	–	7,210	0,74	**PHS 40-1A34**
			144,78	B	–	15,88	57,15	82,55	25,40	7,210	1,50	**PHS 40-1B34**

Maximum bores can accommodate standard keyways. Larger bores are available where a shallow keyway is used or no keyway is required.
All Type B or C sprockets, up to and including 25 tooth, are with hardened teeth as standard.
For any additional size sprockets with hardened teeth, add "H" before the number of teeth, e.g. PHS 25-1BH9.

ANSI sprockets, simplex, pilot bore

ANSI 40-1 · 12,70 mm (1/2") pitch

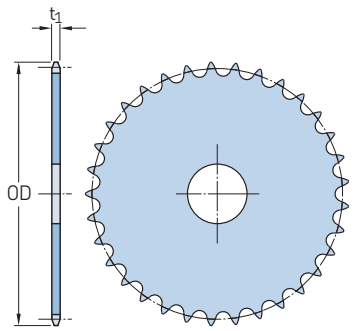

Type A

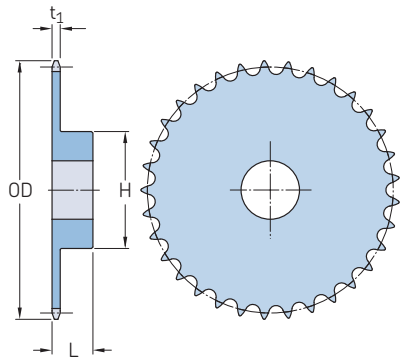

Type B

Pitch		Number of teeth	Outside diameter	Type	Dimensions						Mass	Designation
					Bore stock	Bore		Hub		Plate thickness		
			OD			Min.	Max.	H	L	t_1		
mm	in.	–	mm	–	mm						kg	–
12,70	1/2	**35**	148,84	A	15,08	–	–	–	–	7,210	0,77	**PHS 40-1A35**
			148,84	B	–	15,88	57,15	82,55	25,40	7,210	1,57	**PHS 40-1B35**
		36	152,91	A	15,08	–	–	–	–	7,210	0,83	**PHS 40-1A36**
			152,91	B	–	15,88	57,15	82,55	25,40	7,210	1,62	**PHS 40-1B36**
		37	156,97	A	15,08	–	–	–	–	7,210	0,87	**PHS 40-1A37**
			156,97	B	–	15,88	57,15	82,55	25,40	7,210	1,64	**PHS 40-1B37**
		38	160,78	A	15,08	–	–	–	–	7,210	0,91	**PHS 40-1A38**
			160,78	B	–	15,88	57,15	82,55	25,40	7,210	1,68	**PHS 40-1B38**
		39	164,85	A	15,08	–	–	–	–	7,210	0,92	**PHS 40-1A39**
			164,85	B	–	15,88	57,15	82,55	25,40	7,210	1,71	**PHS 40-1B39**
		40	168,91	A	18,26	–	–	–	–	7,210	1,01	**PHS 40-1A40**
			168,91	B	–	19,05	60,33	88,90	28,58	7,210	2,13	**PHS 40-1B40**
		41	172,97	A	18,26	–	–	–	–	7,210	1,10	**PHS 40-1A41**
			172,97	B	–	19,05	60,33	88,90	28,58	7,210	2,16	**PHS 40-1B41**
		42	177,04	A	18,26	–	–	–	–	7,210	1,13	**PHS 40-1A42**
			177,04	B	–	19,05	60,33	88,90	28,58	7,210	2,19	**PHS 40-1B42**
		43	181,10	A	18,26	–	–	–	–	7,210	1,27	**PHS 40-1A43**
			181,10	B	–	19,05	60,33	88,90	28,58	7,210	2,32	**PHS 40-1B43**
		44	185,17	A	18,26	–	–	–	–	7,210	1,29	**PHS 40-1A44**
			185,17	B	–	19,05	60,33	88,90	28,58	7,210	2,34	**PHS 40-1B44**
		45	189,23	A	18,26	–	–	–	–	7,210	1,43	**PHS 40-1A45**
			189,23	B	–	19,05	60,33	88,90	28,58	7,210	2,40	**PHS 40-1B45**
		46	193,29	A	18,26	–	–	–	–	7,210	1,48	**PHS 40-1A46**
			193,29	B	–	19,05	60,33	88,90	28,58	7,210	2,53	**PHS 40-1B46**
		47	197,36	A	18,26	–	–	–	–	7,210	1,51	**PHS 40-1A47**
			197,36	B	–	19,05	60,33	88,90	28,58	7,210	2,47	**PHS 40-1B47**
		48	201,42	A	18,26	–	–	–	–	7,210	1,46	**PHS 40-1A48**
			201,42	B	–	19,05	60,33	88,90	28,58	7,210	2,65	**PHS 40-1B48**
		49	205,49	A	18,26	–	–	–	–	7,210	1,56	**PHS 40-1A49**
			205,49	B	–	19,05	60,33	88,90	28,58	7,210	2,68	**PHS 40-1B49**
		50	209,55	A	18,26	–	–	–	–	7,210	1,64	**PHS 40-1A50**
			209,55	B	–	19,05	60,33	88,90	28,58	7,210	2,70	**PHS 40-1B50**
		51	213,61	A	18,26	–	–	–	–	7,210	1,79	**PHS 40-1A51**
			213,61	B	–	19,05	60,33	88,90	28,58	7,210	2,76	**PHS 40-1B51**
		52	217,68	A	18,26	–	–	–	–	7,210	1,85	**PHS 40-1A52**
			217,68	B	–	19,05	60,33	88,90	28,58	7,210	2,85	**PHS 40-1B52**
		53	221,74	A	18,26	–	–	–	–	7,210	1,83	**PHS 40-1A53**
			221,74	B	–	19,05	60,33	88,90	28,58	7,210	2,87	**PHS 40-1B53**
		54	225,81	A	18,26	–	–	–	–	7,210	2,01	**PHS 40-1A54**
			225,81	B	–	19,05	60,33	88,90	28,58	7,210	2,91	**PHS 40-1B54**
		55	229,62	A	18,26	–	–	–	–	7,210	2,06	**PHS 40-1A55**
			229,62	B	–	19,05	60,33	88,90	28,58	7,210	2,93	**PHS 40-1B55**
		56	233,68	A	18,26	–	–	–	–	7,210	2,20	**PHS 40-1A56**

Maximum bores can accommodate standard keyways. Larger bores are available where a shallow keyway is used or no keyway is required.
All Type B or C sprockets, up to and including 25 tooth, are with hardened teeth as standard.
For any additional size sprockets with hardened teeth, add "H" before the number of teeth, e.g. PHS 25-1BH9.

ANSI sprockets, simplex, pilot bore

ANSI 40-1 · 12,70 mm (1/2") pitch | ANSI 50-1 · 15,88 mm (5/8") pitch

Pitch		Number of teeth	Outside diameter	Type	Dimensions						Mass	Designation
					Bore stock	Bore		Hub		Plate thickness		
			OD			Min.	Max.	H	L	t_1		
mm	in.	–	mm	–	mm						kg	–
12,70	1/2	**56**	233,68	B	–	19,05	60,33	88,90	28,58	7,210	3,13	**PHS 40-1B56**
		57	237,74	A	18,26	–	–	–	–	7,210	2,27	**PHS 40-1A57**
			237,74	B	–	19,05	60,33	88,90	28,58	7,210	3,18	**PHS 40-1B57**
		58	241,81	A	18,26	–	–	–	–	7,210	2,32	**PHS 40-1A58**
			241,81	B	–	19,05	60,33	88,90	28,58	7,210	3,34	**PHS 40-1B58**
		59	245,87	A	18,26	–	–	–	–	7,210	2,40	**PHS 40-1A59**
			245,87	B	–	19,05	60,33	88,90	28,58	7,210	3,38	**PHS 40-1B59**
		60	249,94	A	18,26	–	–	–	–	7,210	2,49	**PHS 40-1A60**
			249,94	B	–	19,05	60,33	88,90	28,58	7,210	3,57	**PHS 40-1B60**
		70	290,32	A	18,26	–	–	–	–	7,210	3,28	**PHS 40-1A70**
			290,32	B	–	19,05	69,85	101,60	31,75	7,210	4,99	**PHS 40-1B70**
		72	298,45	A	18,26	–	–	–	–	7,210	3,51	**PHS 40-1A72**
			298,45	B	–	19,05	69,85	101,60	31,75	7,210	5,22	**PHS 40-1B72**
		80	330,96	A	18,26	–	–	–	–	7,210	4,63	**PHS 40-1A80**
			330,96	B	–	19,05	69,85	101,60	31,75	7,210	6,08	**PHS 40-1B80**
		84	346,96	A	18,26	–	–	–	–	7,210	4,57	**PHS 40-1A84**
			346,96	B	–	19,05	69,85	101,60	31,75	7,210	6,37	**PHS 40-1B84**
		96	395,48	A	23,81	–	–	–	–	7,210	5,51	**PHS 40-1A96**
			395,48	B	–	25,40	69,85	101,60	31,75	7,210	7,97	**PHS 40-1B96**
		112	460,25	A	23,81	–	–	–	–	7,210	9,07	**PHS 40-1A112**
			460,25	B	–	25,40	69,85	101,60	31,75	7,210	10,23	**PHS 40-1B112**
15,88	5/8	**8**	47,75	B	–	15,88	15,88	28,58	25,40	8,710	0,11	**PHS 50-1BH8**
		9	53,09	B	–	15,88	19,05	34,93	25,40	8,710	0,16	**PHS 50-1BH9**
		10	58,42	B	–	15,88	22,23	39,69	25,40	8,710	0,22	**PHS 50-1BH10**
		11	63,50	B	–	15,88	25,40	44,45	25,40	8,710	0,29	**PHS 50-1BH11**
		12	68,83	A	15,88	–	–	–	–	8,710	0,15	**PHS 50-1A12**
			68,83	B	–	15,88	31,75	50,40	25,40	8,710	0,38	**PHS 50-1BH12**
		13	73,91	A	15,88	–	–	–	–	8,710	0,19	**PHS 50-1A13**
			73,91	B	–	15,88	33,34	47,63	25,40	8,710	0,40	**PHS 50-1BH13**
		14	78,99	A	15,88	–	–	–	–	8,710	0,23	**PHS 50-1A14**
			78,99	B	–	15,88	36,51	53,98	25,40	8,710	0,51	**PHS 50-1BH14**
		15	84,33	A	15,88	–	–	–	–	8,710	0,24	**PHS 50-1A15**
			84,33	B	–	15,88	38,10	60,33	25,40	8,710	0,61	**PHS 50-1BH15**
		16	89,41	A	15,88	–	–	–	–	8,710	0,31	**PHS 50-1A16**
			89,41	B	–	15,88	44,45	63,50	25,40	8,710	0,68	**PHS 50-1BH16**
		17	94,49	A	15,88	–	–	–	–	8,710	0,34	**PHS 50-1A17**
			94,49	B	–	15,88	47,63	68,26	25,40	8,710	0,79	**PHS 50-1BH17**
		18	99,57	A	15,88	–	–	–	–	8,710	0,39	**PHS 50-1A18**
			99,57	B	–	15,88	47,63	73,03	25,40	8,710	0,91	**PHS 50-1BH18**
		19	104,65	A	15,88	–	–	–	–	8,710	0,43	**PHS 50-1A19**
			104,65	B	–	15,88	50,80	76,20	25,40	8,710	1,01	**PHS 50-1BH19**
		20	109,73	A	19,05	–	–	–	–	8,710	0,48	**PHS 50-1A20**
			109,73	B	–	19,05	50,80	76,20	25,40	8,710	1,03	**PHS 50-1BH20**
		21	114,81	A	19,05	–	–	–	–	8,710	0,51	**PHS 50-1A21**
			114,81	B	–	19,05	50,80	76,20	25,40	8,710	1,09	**PHS 50-1BH21**
		22	119,89	A	19,05	–	–	–	–	8,710	0,59	**PHS 50-1A22**
			119,89	B	–	19,05	50,80	76,20	25,40	8,710	1,16	**PHS 50-1BH22**
		23	124,97	A	19,05	–	–	–	–	8,710	0,65	**PHS 50-1A23**
			124,97	B	–	19,05	50,80	76,20	25,40	8,710	1,21	**PHS 50-1BH23**
		24	130,05	A	18,26	–	–	–	–	8,710	0,68	**PHS 50-1A24**
			130,05	B	–	19,05	50,80	76,20	31,75	8,710	1,50	**PHS 50-1BH24**
		25	135,13	A	18,26	–	–	–	–	8,710	0,73	**PHS 50-1A25**
			135,13	B	–	19,05	50,80	76,20	31,75	8,710	1,54	**PHS 50-1BH25**
		26	140,21	A	18,26	–	–	–	–	8,710	0,78	**PHS 50-1A26**
			140,21	B	–	19,05	50,80	76,20	31,75	8,710	1,56	**PHS 50-1B26**
		27	145,29	A	18,26	–	–	–	–	8,710	0,89	**PHS 50-1A27**
			145,29	B	–	19,05	50,80	76,20	31,75	8,710	1,70	**PHS 50-1B27**

Maximum bores can accommodate standard keyways. Larger bores are available where a shallow keyway is used or no keyway is required.
All Type B or C sprockets, up to and including 25 tooth, are with hardened teeth as standard.
For any additional size sprockets with hardened teeth, add "H" before the number of teeth, e.g. PHS 25-1BH9.

ANSI sprockets, simplex, pilot bore

ANSI 50-1 · 15,88 mm (5/8") pitch

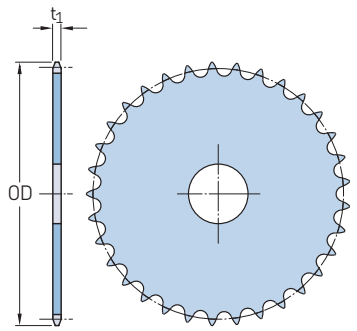

Type A

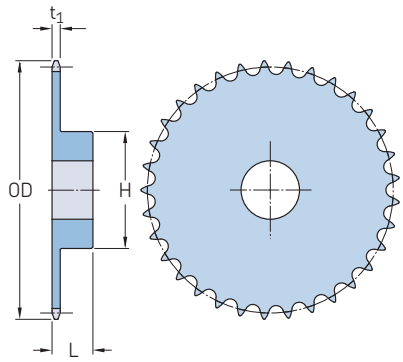

Type B

Pitch		Number of teeth	Outside diameter	Type	Dimensions						Mass	Designation
					Bore stock	Bore		Hub		Plate thickness		
			OD			Min.	Max.	H	L	t_1		
mm	in.	–	mm	–	mm						kg	–
15,88	5/8	**28**	150,37	A	18,26	–	–	–	–	8,710	0,93	**PHS 50-1A28**
			150,37	B	–	19,05	50,80	76,20	31,75	8,710	1,72	**PHS 50-1B28**
		29	155,45	A	18,26	–	–	–	–	8,710	1,07	**PHS 50-1A29**
			155,45	B	–	19,05	50,80	76,20	31,75	8,710	1,84	**PHS 50-1B29**
		30	160,53	A	18,26	–	–	–	–	8,710	1,15	**PHS 50-1A30**
			160,53	B	–	19,05	57,15	82,55	31,75	8,710	2,07	**PHS 50-1B30**
		31	165,61	A	18,26	–	–	–	–	8,710	1,27	**PHS 50-1A31**
			165,61	B	–	19,05	57,15	82,55	31,75	8,710	2,15	**PHS 50-1B31**
		32	170,69	A	18,26	–	–	–	–	8,710	1,23	**PHS 50-1A32**
			170,69	B	–	19,05	57,15	82,55	31,75	8,710	2,25	**PHS 50-1B32**
		33	175,77	A	18,26	–	–	–	–	8,710	1,42	**PHS 50-1A33**
			175,77	B	–	19,05	57,15	82,55	31,75	8,710	2,36	**PHS 50-1B33**
		34	180,85	A	18,26	–	–	–	–	8,710	1,45	**PHS 50-1A34**
			180,85	B	–	19,05	57,15	82,55	31,75	8,710	2,33	**PHS 50-1B34**
		35	185,93	A	18,26	–	–	–	–	8,710	1,51	**PHS 50-1A35**
			185,93	B	–	19,05	57,15	82,55	31,75	8,710	2,47	**PHS 50-1B35**
		36	191,01	A	18,26	–	–	–	–	8,710	1,73	**PHS 50-1A36**
			191,01	B	–	19,05	57,15	82,55	31,75	8,710	2,56	**PHS 50-1B36**
		37	196,09	A	18,26	–	–	–	–	8,710	1,81	**PHS 50-1A37**
			196,09	B	–	19,05	57,15	82,55	31,75	8,710	2,68	**PHS 50-1B37**
		38	201,17	A	18,26	–	–	–	–	8,710	1,88	**PHS 50-1A38**
			201,17	B	–	19,05	57,15	82,55	31,75	8,710	2,76	**PHS 50-1B38**
		39	206,25	A	18,26	–	–	–	–	8,710	2,00	**PHS 50-1A39**
			206,25	B	–	19,05	57,15	82,55	31,75	8,710	2,86	**PHS 50-1B39**
		40	211,33	A	18,26	–	–	–	–	8,710	2,02	**PHS 50-1A40**
			211,33	B	–	19,05	57,15	82,55	31,75	8,710	2,95	**PHS 50-1B40**
		41	216,41	A	18,26	–	–	–	–	8,710	2,20	**PHS 50-1A41**
			216,41	B	–	19,05	57,15	82,55	31,75	8,710	3,01	**PHS 50-1B41**
		42	221,49	A	18,26	–	–	–	–	8,710	2,26	**PHS 50-1A42**
			221,49	B	–	19,05	57,15	82,55	31,75	8,710	3,16	**PHS 50-1B42**
		43	226,31	A	18,26	–	–	–	–	8,710	2,38	**PHS 50-1A43**
			226,31	B	–	19,05	57,15	82,55	31,75	8,710	3,20	**PHS 50-1B43**
		44	231,39	A	18,26	–	–	–	–	8,710	2,46	**PHS 50-1A44**
			231,39	B	–	19,05	57,15	82,55	31,75	8,710	3,44	**PHS 50-1B44**
		45	236,47	A	18,26	–	–	–	–	8,710	2,69	**PHS 50-1A45**
			236,47	B	–	19,05	63,50	95,25	31,75	8,710	3,89	**PHS 50-1B45**
		46	241,55	A	23,81	–	–	–	–	8,710	2,91	**PHS 50-1A46**
			241,55	B	–	25,40	63,50	95,25	31,75	8,710	3,73	**PHS 50-1B46**
		47	246,63	A	23,81	–	–	–	–	8,710	2,95	**PHS 50-1A47**
			246,63	B	–	25,40	63,50	95,25	31,75	8,710	3,85	**PHS 50-1B47**
		48	251,71	A	23,81	–	–	–	–	8,710	2,98	**PHS 50-1A48**
			251,71	B	–	25,40	63,50	95,25	31,75	8,710	4,21	**PHS 50-1B48**
		49	256,79	A	23,81	–	–	–	–	8,710	3,20	**PHS 50-1A49**

Maximum bores can accommodate standard keyways. Larger bores are available where a shallow keyway is used or no keyway is required.
All Type B or C sprockets, up to and including 25 tooth, are with hardened teeth as standard.
For any additional size sprockets with hardened teeth, add "H" before the number of teeth, e.g. PHS 25-1BH9.

ANSI sprockets, simplex, pilot bore

ANSI 50-1 · 15,88 mm (5/8") pitch | ANSI 60-1 · 19,05 mm (3/4") pitch

Pitch		Number of teeth	Outside diameter	Type	Dimensions						Mass	Designation
					Bore stock	Bore		Hub		Plate thickness		
			OD			Min.	Max.	H	L	t_1		
mm	in.	–	mm	–	mm						kg	–
15,88	5/8	**49**	256,79	B	–	25,40	63,50	95,25	31,75	8,710	4,18	**PHS 50-1B49**
		50	261,87	A	23,81	–	–	–	–	8,710	3,22	**PHS 50-1A50**
			261,87	B	–	25,40	63,50	95,25	31,75	8,710	4,48	**PHS 50-1B50**
		51	266,95	A	23,81	–	–	–	–	8,710	3,32	**PHS 50-1A51**
			266,95	B	–	25,40	63,50	95,25	31,75	8,710	4,40	**PHS 50-1B51**
		52	272,03	A	23,81	–	–	–	–	8,710	3,62	**PHS 50-1A52**
			272,03	B	–	25,40	63,50	95,25	31,75	8,710	4,64	**PHS 50-1B52**
		53	277,11	A	23,81	–	–	–	–	8,710	3,67	**PHS 50-1A53**
			277,11	B	–	25,40	63,50	95,25	31,75	8,710	4,75	**PHS 50-1B53**
		54	282,19	A	23,81	–	–	–	–	8,710	3,76	**PHS 50-1A54**
			282,19	B	–	25,40	63,50	95,25	31,75	8,710	4,99	**PHS 50-1B54**
		55	287,27	A	23,81	–	–	–	–	8,710	3,88	**PHS 50-1A55**
			287,27	B	–	25,40	63,50	95,25	31,75	8,710	4,96	**PHS 50-1B55**
		56	292,10	A	23,81	–	–	–	–	8,710	4,04	**PHS 50-1A56**
			292,10	B	–	25,40	63,50	95,25	31,75	8,710	5,22	**PHS 50-1B56**
		57	297,18	A	23,81	–	–	–	–	8,710	4,25	**PHS 50-1A57**
			297,18	B	–	25,40	63,50	95,25	31,75	8,710	5,44	**PHS 50-1B57**
		58	302,26	A	23,81	–	–	–	–	8,710	4,67	**PHS 50-1A58**
			302,26	B	–	25,40	63,50	95,25	31,75	8,710	5,36	**PHS 50-1B58**
		59	307,34	A	23,81	–	–	–	–	8,710	4,76	**PHS 50-1A59**
			307,34	B	–	25,40	63,50	95,25	31,75	8,710	5,59	**PHS 50-1B59**
		60	312,42	A	23,81	–	–	–	–	8,710	4,90	**PHS 50-1A60**
			312,42	B	–	25,40	63,50	95,25	31,75	8,710	5,90	**PHS 50-1B60**
		70	362,97	A	23,81	–	–	–	–	8,710	6,35	**PHS 50-1A70**
			362,97	B	–	25,40	63,50	95,25	44,45	8,710	8,24	**PHS 50-1B70**
		72	373,13	A	23,81	–	–	–	–	8,710	6,91	**PHS 50-1A72**
			373,13	B	–	25,40	63,50	95,25	44,45	8,710	8,84	**PHS 50-1B72**
		76	393,45	A	23,81	–	–	–	–	8,710	9,11	**PHS 50-1A76**
			393,45	B	–	25,40	63,50	95,25	44,45	8,710	9,53	**PHS 50-1B76**
		80	413,51	A	23,81	–	–	–	–	8,710	9,53	**PHS 50-1A80**
			413,51	B	–	25,40	69,85	107,95	44,45	8,710	11,22	**PHS 50-1B80**
		84	433,83	A	23,81	–	–	–	–	8,710	10,02	**PHS 50-1A84**
			433,83	B	–	25,40	69,85	107,95	44,45	8,710	11,57	**PHS 50-1B84**
		95	489,46	A	23,81	–	–	–	–	8,710	12,25	**PHS 50-1A95**
			489,46	B	–	25,40	69,85	107,95	44,45	8,710	14,51	**PHS 50-1B95**
		96	494,54	A	23,81	–	–	–	–	8,710	12,43	**PHS 50-1A96**
			494,54	B	–	25,40	69,85	107,95	44,45	8,710	14,93	**PHS 50-1B96**
		112	575,31	A	23,81	–	–	–	–	8,710	17,10	**PHS 50-1A112**
			575,31	B	–	25,40	69,85	107,95	44,45	8,710	19,05	**PHS 50-1B112**
19,05	3/4	**8**	57,40	B	–	15,88	15,88	37,31	31,75	11,660	0,24	**PHS 60-1BH8**
		9	63,75	B	–	19,05	22,23	39,69	31,75	11,660	0,29	**PHS 60-1BH9**
		10	70,10	A	19,05	–	–	–	–	11,660	0,20	**PHS 60-1A10**
			70,10	B	–	19,05	28,58	49,21	31,75	11,660	0,45	**PHS 60-1BH10**
		11	76,20	A	19,05	–	–	–	–	11,660	0,24	**PHS 60-1A11**
			76,20	B	–	19,05	33,34	52,39	31,75	11,660	0,53	**PHS 60-1BH11**
		12	82,55	A	19,05	–	–	–	–	11,660	0,31	**PHS 60-1A12**
			82,55	B	–	19,05	34,93	60,33	31,75	11,660	0,67	**PHS 60-1BH12**
		13	88,65	A	19,05	–	–	–	–	11,660	0,36	**PHS 60-1A13**
			88,65	B	–	19,05	38,10	59,53	31,75	11,660	0,75	**PHS 60-1BH13**
		14	95,00	A	19,05	–	–	–	–	11,660	0,43	**PHS 60-1A14**
			95,00	B	–	19,05	44,45	65,09	31,75	11,660	0,91	**PHS 60-1BH14**
		15	101,09	A	19,05	–	–	–	–	11,660	0,49	**PHS 60-1A15**
			101,09	B	–	19,05	47,63	73,03	31,75	11,660	1,14	**PHS 60-1BH15**
		16	107,19	A	19,05	–	–	–	–	11,660	0,56	**PHS 60-1A16**
			107,19	B	–	19,05	50,80	77,79	31,75	11,660	1,27	**PHS 60-1BH16**
		17	113,28	A	19,05	–	–	–	–	11,660	0,65	**PHS 60-1A17**
			113,28	B	–	19,05	57,15	82,55	31,75	11,660	1,46	**PHS 60-1BH17**
		18	119,38	A	19,05	–	–	–	–	11,660	0,73	**PHS 60-1A18**

Maximum bores can accommodate standard keyways. Larger bores are available where a shallow keyway is used or no keyway is required.
All Type B or C sprockets, up to and including 25 tooth, are with hardened teeth as standard.
For any additional size sprockets with hardened teeth, add "H" before the number of teeth, e.g. PHS 25-1BH9.

ANSI sprockets, simplex, pilot bore

ANSI 60-1 · 19,05 mm (3/4") pitch

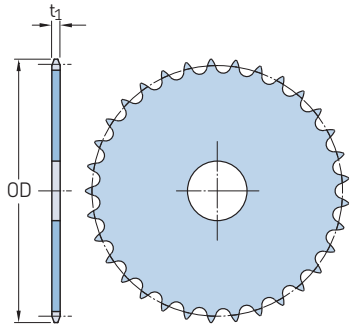

Type A

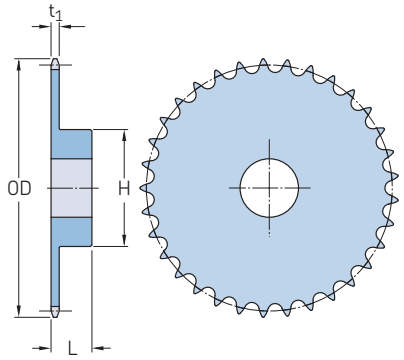

Type B

Pitch		Number of teeth	Outside diameter	Type	Dimensions						Mass	Designation
					Bore stock	Bore		Hub		Plate thickness		
			OD			Min.	Max.	H	L	t_1		
mm	in.	–	mm	–	mm						kg	–
19,05	3/4	**18**	119,38	B	–	19,05	60,33	88,90	31,75	11,660	1,69	**PHS 60-1BH18**
		19	125,73	A	19,05	–	–	–	–	11,660	0,83	**PHS 60-1A19**
			125,73	B	–	19,05	60,33	88,90	31,75	11,660	1,78	**PHS 60-1BH19**
		20	131,83	A	19,05	–	–	–	–	11,660	0,96	**PHS 60-1A20**
			131,83	B	–	19,05	66,68	98,43	31,75	11,660	2,10	**PHS 60-1BH20**
		21	137,92	A	19,05	–	–	–	–	11,660	1,03	**PHS 60-1A21**
			137,92	B	–	19,05	69,85	101,60	31,75	11,660	2,27	**PHS 60-1BH21**
		22	144,02	A	19,05	–	–	–	–	11,660	1,12	**PHS 60-1A22**
			144,02	B	–	19,05	69,85	101,60	31,75	11,660	2,38	**PHS 60-1BH22**
		23	150,11	A	19,05	–	–	–	–	11,660	1,22	**PHS 60-1A23**
			150,11	B	–	19,05	69,85	101,60	31,75	11,660	2,49	**PHS 60-1BH23**
		24	156,21	A	18,26	–	–	–	–	11,660	1,36	**PHS 60-1A24**
			156,21	B	–	19,05	69,85	101,60	31,75	11,660	2,62	**PHS 60-1BH24**
		25	162,31	A	18,26	–	–	–	–	11,660	1,51	**PHS 60-1A25**
			162,31	B	–	19,05	69,85	101,60	31,75	11,660	2,78	**PHS 60-1BH25**
		26	168,40	A	18,26	–	–	–	–	11,660	1,61	**PHS 60-1A26**
			168,40	B	–	19,05	69,85	101,60	31,75	11,660	2,89	**PHS 60-1B26**
		27	174,50	A	18,26	–	–	–	–	11,660	1,80	**PHS 60-1A27**
			174,50	B	–	19,05	69,85	101,60	31,75	11,660	3,05	**PHS 60-1B27**
		28	180,59	A	18,26	–	–	–	–	11,660	1,88	**PHS 60-1A28**
			180,59	B	–	19,05	69,85	101,60	31,75	11,660	3,12	**PHS 60-1B28**
		29	186,69	A	18,26	–	–	–	–	11,660	2,00	**PHS 60-1A29**
			186,69	B	–	19,05	69,85	101,60	31,75	11,660	3,30	**PHS 60-1B29**
		30	192,79	A	18,26	–	–	–	–	11,660	2,17	**PHS 60-1A30**
			192,79	B	–	19,05	69,85	101,60	31,75	11,660	3,44	**PHS 60-1B30**
		31	198,88	A	18,26	–	–	–	–	11,660	2,38	**PHS 60-1A31**
			198,88	B	–	19,05	69,85	101,60	31,75	11,660	3,50	**PHS 60-1B31**
		32	204,98	A	18,26	–	–	–	–	11,660	2,50	**PHS 60-1A32**
			204,98	B	–	19,05	69,85	101,60	31,75	11,660	3,75	**PHS 60-1B32**
		33	210,82	A	23,81	–	–	–	–	11,660	2,66	**PHS 60-1A33**
			210,82	B	–	25,40	69,85	101,60	31,75	11,660	3,82	**PHS 60-1B33**
		34	216,92	A	23,81	–	–	–	–	11,660	2,79	**PHS 60-1A34**
			216,92	B	–	25,40	69,85	101,60	31,75	11,660	3,99	**PHS 60-1B34**
		35	223,01	A	23,81	–	–	–	–	11,660	3,08	**PHS 60-1A35**
			223,01	B	–	25,40	69,85	101,60	31,75	11,660	4,10	**PHS 60-1B35**
		36	229,11	A	23,81	–	–	–	–	11,660	3,09	**PHS 60-1A36**
			229,11	B	–	25,40	69,85	101,60	31,75	11,660	4,35	**PHS 60-1B36**
		37	235,20	A	23,81	–	–	–	–	11,660	3,41	**PHS 60-1A37**
			235,20	B	–	25,40	69,85	101,60	31,75	11,660	4,64	**PHS 60-1B37**
		38	241,30	A	23,81	–	–	–	–	11,660	3,56	**PHS 60-1A38**
			241,30	B	–	25,40	69,85	107,95	31,75	11,660	4,92	**PHS 60-1B38**
		39	247,40	A	23,81	–	–	–	–	11,660	3,76	**PHS 60-1A39**
			247,40	B	–	25,40	69,85	107,95	31,75	11,660	5,15	**PHS 60-1B39**

Maximum bores can accommodate standard keyways. Larger bores are available where a shallow keyway is used or no keyway is required.
All Type B or C sprockets, up to and including 25 tooth, are with hardened teeth as standard.
For any additional size sprockets with hardened teeth, add "H" before the number of teeth, e.g. PHS 25-1BH9.

ANSI sprockets, simplex, pilot bore

ANSI 60-1 · 19,05 mm (3/4") pitch

Pitch		Number of teeth	Outside diameter	Type	Dimensions						Mass	Designation
					Bore stock	Bore		Hub		Plate thickness		
			OD			Min.	Max.	H	L	t_1		
mm	in.	–	mm	–	mm						kg	–
19,05	3/4	**40**	253,49	A	23,81	–	–	–	–	11,660	3,88	**PHS 60-1A40**
			253,49	B	–	25,40	69,85	107,95	31,75	11,660	5,22	**PHS 60-1B40**
		41	259,59	A	23,81	–	–	–	–	11,660	4,13	**PHS 60-1A41**
			259,59	B	–	25,40	69,85	107,95	31,75	11,660	5,51	**PHS 60-1B41**
		42	265,68	A	23,81	–	–	–	–	11,660	4,46	**PHS 60-1A42**
			265,68	B	–	25,40	69,85	107,95	31,75	11,660	5,78	**PHS 60-1B42**
		43	271,78	A	23,81	–	–	–	–	11,660	4,42	**PHS 60-1A43**
			271,78	B	–	25,40	69,85	107,95	31,75	11,660	5,90	**PHS 60-1B43**
		44	277,88	A	23,81	–	–	–	–	11,660	4,88	**PHS 60-1A44**
			277,88	B	–	23,81	69,85	107,95	31,75	11,660	6,30	**PHS 60-1B44**
		45	283,97	A	23,81	–	–	–	–	11,660	5,03	**PHS 60-1A45**
			283,97	B	–	23,81	69,85	107,95	31,75	11,660	6,34	**PHS 60-1B45**
		46	290,07	A	23,81	–	–	–	–	11,660	5,22	**PHS 60-1A46**
			290,07	B	–	23,81	69,85	107,95	31,75	11,660	6,62	**PHS 60-1B46**
		47	295,91	A	23,81	–	–	–	–	11,660	5,59	**PHS 60-1A47**
			295,91	B	–	23,81	69,85	107,95	31,75	11,660	6,80	**PHS 60-1B47**
		48	302,01	A	23,81	–	–	–	–	11,660	5,63	**PHS 60-1A48**
			302,01	B	–	23,81	69,85	107,95	31,75	11,660	7,18	**PHS 60-1B48**
		49	308,10	A	23,81	–	–	–	–	11,660	5,86	**PHS 60-1A49**
			308,10	B	–	23,81	69,85	107,95	31,75	11,660	7,21	**PHS 60-1B49**
		50	314,20	A	23,81	–	–	–	–	11,660	6,34	**PHS 60-1A50**
			314,20	B	–	23,81	69,85	107,95	31,75	11,660	8,01	**PHS 60-1B50**
		51	320,29	A	23,81	–	–	–	–	11,660	6,61	**PHS 60-1A51**
			320,29	B	–	23,81	69,85	107,95	31,75	11,660	7,70	**PHS 60-1B51**
		52	326,39	A	23,81	–	–	–	–	11,660	6,62	**PHS 60-1A52**
			326,39	B	–	23,81	69,85	107,95	31,75	11,660	8,13	**PHS 60-1B52**
		53	332,49	A	23,81	–	–	–	–	11,660	7,18	**PHS 60-1A53**
			332,49	B	–	23,81	69,85	107,95	31,75	11,660	8,16	**PHS 60-1B53**
		54	338,58	A	23,81	–	–	–	–	11,660	7,22	**PHS 60-1A54**
			338,58	B	–	23,81	69,85	107,95	44,45	11,660	9,80	**PHS 60-1B54**
		55	344,68	A	31,75	–	–	–	–	11,660	7,69	**PHS 60-1A55**
			344,68	B	–	31,75	69,85	107,95	44,45	11,660	9,59	**PHS 60-1B55**
		56	350,77	A	31,75	–	–	–	–	11,660	7,98	**PHS 60-1A56**
			350,77	B	–	31,75	69,85	107,95	44,45	11,660	9,92	**PHS 60-1B56**
		57	356,62	A	31,75	–	–	–	–	11,660	7,99	**PHS 60-1A57**
			356,62	B	–	31,75	69,85	107,95	44,45	11,660	10,10	**PHS 60-1B57**
		58	362,71	A	31,75	–	–	–	–	11,660	8,62	**PHS 60-1A58**
			362,71	B	–	31,75	69,85	107,95	44,45	11,660	10,34	**PHS 60-1B58**
		59	368,81	A	31,75	–	–	–	–	11,660	8,71	**PHS 60-1A59**
			368,81	B	–	31,75	69,85	107,95	44,45	11,660	10,82	**PHS 60-1B59**
		60	374,90	A	31,75	–	–	–	–	11,660	9,08	**PHS 60-1A60**
			374,90	B	–	31,75	69,85	107,95	44,45	11,660	11,44	**PHS 60-1B60**
		64	399,29	A	31,75	–	–	–	–	11,660	10,43	**PHS 60-1A64**
			399,29	B	–	31,75	69,85	107,95	44,45	11,660	12,43	**PHS 60-1B64**
		65	405,38	A	31,75	–	–	–	–	11,660	10,54	**PHS 60-1A65**
			405,38	B	–	31,75	69,85	107,95	44,45	11,660	13,12	**PHS 60-1B65**
		66	–	A	31,75	–	–	–	–	11,660	11,08	**PHS 60-1A66**
		68	423,42	A	31,75	–	–	–	–	11,660	11,58	**PHS 60-1A68**
			423,42	B	–	31,75	69,85	107,95	44,45	11,660	13,78	**PHS 60-1B68**
		70	435,61	A	31,75	–	–	–	–	11,660	12,34	**PHS 60-1A70**
			435,61	B	–	31,75	69,85	107,95	44,45	11,660	14,51	**PHS 60-1B70**
		72	447,80	A	31,75	–	–	–	–	11,660	13,11	**PHS 60-1A72**
			447,80	B	–	31,75	69,85	107,95	50,80	11,660	15,50	**PHS 60-1B72**
		76	471,93	A	31,75	–	–	–	–	11,660	14,67	**PHS 60-1A76**
			471,93	B	–	31,75	69,85	107,95	50,80	11,660	17,26	**PHS 60-1B76**
		80	496,32	A	31,75	–	–	–	–	11,660	20,64	**PHS 60-1A80**
			496,32	B	–	31,75	69,85	107,95	50,80	11,660	19,00	**PHS 60-1B80**
		84	520,45	A	31,75	–	–	–	–	11,660	18,23	**PHS 60-1A84**
			520,45	B	–	31,75	82,55	120,65	50,80	11,660	21,07	**PHS 60-1B84**

Maximum bores can accommodate standard keyways. Larger bores are available where a shallow keyway is used or no keyway is required.
All Type B or C sprockets, up to and including 25 tooth, are with hardened teeth as standard.
For any additional size sprockets with hardened teeth, add "H" before the number of teeth, e.g. PHS 25-1BH9.

ANSI sprockets, simplex, pilot bore

ANSI 60-1 · 19,05 mm (3/4") pitch | ANSI 80-1 · 25,40 mm (1") pitch

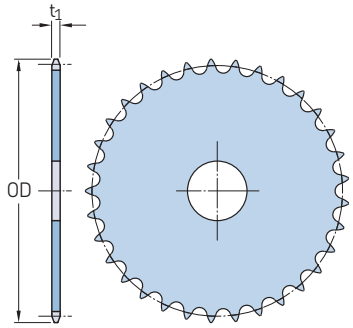

Type A

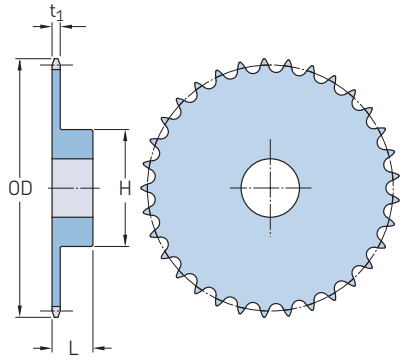

Type B

Pitch		Number of teeth	Outside diameter	Type	Dimensions						Mass	Designation
					Bore stock	Bore		Hub		Plate thickness		
			OD			Min.	Max.	H	L	t_1		
mm	in.	–	mm	–	mm						kg	–
19,05	3/4	**90**	557,02	A	31,75	–	–	–	–	11,660	19,70	**PHS 60-1A90**
			557,02	B	–	31,75	84,14	127,00	57,15	11,660	28,67	**PHS 60-1B90**
		96	593,34	A	31,75	–	–	–	–	11,660	23,60	**PHS 60-1A96**
			593,34	B	–	31,75	95,25	139,70	57,15	11,660	28,61	**PHS 60-1B96**
		112	690,37	A	31,75	–	–	–	–	11,660	32,11	**PHS 60-1A112**
			690,37	B	–	31,75	95,25	139,70	57,15	11,660	37,09	**PHS 60-1B112**
25,40	**1**	**8**	76,45	B	–	25,40	25,40	49,21	41,28	14,600	0,64	**PHS 80-1BH8**
		9	85,09	A	23,81	–	–	–	–	14,600	0,36	**PHS 80-1A9**
			85,09	B	–	25,40	33,34	57,15	41,28	14,600	0,73	**PHS 80-1BH9**
		10	93,47	A	23,81	–	–	–	–	14,600	0,45	**PHS 80-1A10**
			93,47	B	–	25,40	38,10	65,09	41,28	14,600	1,00	**PHS 80-1BH10**
		11	101,85	A	23,81	–	–	–	–	14,600	0,59	**PHS 80-1A11**
			101,85	B	–	25,40	41,28	71,44	41,28	14,600	1,45	**PHS 80-1BH11**
		12	109,98	A	23,81	–	–	–	–	14,600	0,68	**PHS 80-1A12**
			109,98	B	–	25,40	47,63	79,38	41,28	14,600	1,54	**PHS 80-1BH12**
		13	118,36	A	23,81	–	–	–	–	14,600	0,82	**PHS 80-1A13**
			118,36	B	–	25,40	50,80	76,20	38,10	14,600	1,59	**PHS 80-1BH13**
		14	126,49	A	23,81	–	–	–	–	14,600	1,00	**PHS 80-1A14**
			126,49	B	–	25,40	57,15	82,55	38,10	14,600	1,86	**PHS 80-1BH14**
		15	134,62	A	23,81	–	–	–	–	14,600	1,13	**PHS 80-1A15**
			134,62	B	–	25,40	63,50	96,84	38,10	14,600	2,40	**PHS 80-1BH15**
		16	143,00	A	23,81	–	–	–	–	14,600	1,32	**PHS 80-1A16**
			143,00	B	–	25,40	69,85	101,60	38,10	14,600	2,68	**PHS 80-1BH16**
		17	151,13	A	23,81	–	–	–	–	14,600	1,50	**PHS 80-1A17**
			151,13	B	–	25,40	69,85	101,60	38,10	14,600	2,99	**PHS 80-1BH17**
		18	159,26	A	23,81	–	–	–	–	14,600	1,68	**PHS 80-1A18**
			159,26	B	–	25,40	69,85	107,95	38,10	14,600	3,31	**PHS 80-1BH18**
		19	167,39	A	23,81	–	–	–	–	14,600	1,86	**PHS 80-1A19**
			167,39	B	–	25,40	69,85	107,95	38,10	14,600	3,54	**PHS 80-1BH19**
		20	175,51	A	23,81	–	–	–	–	14,600	2,13	**PHS 80-1A20**
			175,51	B	–	25,40	69,85	107,95	38,10	14,600	3,81	**PHS 80-1BH20**
		21	183,90	A	23,81	–	–	–	–	14,600	2,22	**PHS 80-1A21**
			183,90	B	–	25,40	69,85	107,95	44,45	14,600	4,26	**PHS 80-1BH21**
		22	192,02	A	23,81	–	–	–	–	14,600	2,49	**PHS 80-1A22**
			192,02	B	–	25,40	69,85	107,95	44,45	14,600	4,54	**PHS 80-1BH22**
		23	200,15	A	23,81	–	–	–	–	14,600	2,86	**PHS 80-1A23**
			200,15	B	–	25,40	69,85	107,95	44,45	14,600	4,85	**PHS 80-1BH23**
		24	208,28	A	23,81	–	–	–	–	14,600	3,04	**PHS 80-1A24**
			208,28	B	–	25,40	69,85	107,95	44,45	14,600	5,13	**PHS 80-1BH24**
		25	216,41	A	23,81	–	–	–	–	14,600	3,27	**PHS 80-1A25**
			216,41	B	–	25,40	69,85	107,95	44,45	14,600	5,40	**PHS 80-1BH25**
		26	224,54	A	30,16	–	–	–	–	14,600	3,54	**PHS 80-1A26**
			224,54	B	–	31,75	82,55	120,65	50,80	14,600	6,49	**PHS 80-1B26**

Maximum bores can accommodate standard keyways. Larger bores are available where a shallow keyway is used or no keyway is required.
All Type B or C sprockets, up to and including 25 tooth, are with hardened teeth as standard.
For any additional size sprockets with hardened teeth, add "H" before the number of teeth, e.g. PHS 25-1BH9.

ANSI sprockets, simplex, pilot bore

ANSI 80-1 · 25,40 mm (1") pitch

Pitch		Number of teeth	Outside diameter	Type	Dimensions						Mass	Designation
					Bore stock	Bore		Hub		Plate thickness		
			OD			Min.	Max.	H	L	t_1		
mm	in.	–	mm	–	mm						kg	–
25,40	**1**	**27**	232,66	A	30,16	–	–	–	–	14,600	3,90	**PHS 80-1A27**
			232,66	B	–	31,75	82,55	120,65	50,80	14,600	6,99	**PHS 80-1B27**
		28	240,79	A	30,16	–	–	–	–	14,600	4,22	**PHS 80-1A28**
			240,79	B	–	31,75	82,55	120,65	50,80	14,600	7,26	**PHS 80-1B28**
		29	248,92	A	30,16	–	–	–	–	14,600	4,45	**PHS 80-1A29**
			248,92	B	–	30,16	82,55	120,65	50,80	14,600	7,76	**PHS 80-1B29**
		30	256,79	A	30,16	–	–	–	–	14,600	4,85	**PHS 80-1A30**
			256,79	B	–	30,16	82,55	120,65	50,80	14,600	7,89	**PHS 80-1B30**
		31	264,92	A	30,16	–	–	–	–	14,600	5,13	**PHS 80-1A31**
			264,92	B	–	30,16	82,55	120,65	50,80	14,600	8,48	**PHS 80-1B31**
		32	273,05	A	30,16	–	–	–	–	14,600	5,49	**PHS 80-1A32**
			273,05	B	–	30,16	82,55	120,65	50,80	14,600	8,85	**PHS 80-1B32**
		33	281,18	A	30,16	–	–	–	–	14,600	6,17	**PHS 80-1A33**
			281,18	B	–	30,16	82,55	120,65	50,80	14,600	8,89	**PHS 80-1B33**
		34	289,31	A	30,16	–	–	–	–	14,600	6,49	**PHS 80-1A34**
			289,31	B	–	30,16	82,55	120,65	50,80	14,600	9,66	**PHS 80-1B34**
		35	297,43	A	30,16	–	–	–	–	14,600	6,71	**PHS 80-1A35**
			297,43	B	–	30,16	82,55	120,65	50,80	14,600	10,02	**PHS 80-1B35**
		36	305,56	A	30,16	–	–	–	–	14,600	7,30	**PHS 80-1A36**
			305,56	B	–	30,16	82,55	120,65	50,80	14,600	10,48	**PHS 80-1B36**
		37	313,69	A	30,16	–	–	–	–	14,600	7,62	**PHS 80-1A37**
			313,69	B	–	30,16	82,55	120,65	50,80	14,600	10,80	**PHS 80-1B37**
		38	321,82	A	30,16	–	–	–	–	14,600	7,80	**PHS 80-1A38**
			321,82	B	–	30,16	82,55	120,65	50,80	14,600	11,20	**PHS 80-1B38**
		39	329,95	A	30,16	–	–	–	–	14,600	8,12	**PHS 80-1A39**
			329,95	B	–	30,16	82,55	120,65	50,80	14,600	11,61	**PHS 80-1B39**
		40	338,07	A	30,16	–	–	–	–	14,600	8,57	**PHS 80-1A40**
			338,07	B	–	30,16	82,55	120,65	50,80	14,600	12,11	**PHS 80-1B40**
		41	346,20	A	31,75	–	–	–	–	14,600	9,53	**PHS 80-1A41**
			346,20	B	–	31,75	82,55	120,65	50,80	14,600	12,61	**PHS 80-1B41**
		42	354,08	A	31,75	–	–	–	–	14,600	9,89	**PHS 80-1A42**
			354,08	B	–	31,75	82,55	120,65	50,80	14,600	13,02	**PHS 80-1B42**
		43	362,20	A	31,75	–	–	–	–	14,600	10,70	**PHS 80-1A43**
			362,20	B	–	31,75	82,55	120,65	50,80	14,600	13,34	**PHS 80-1B43**
		44	370,33	A	31,75	–	–	–	–	14,600	11,02	**PHS 80-1A44**
			370,33	B	–	31,75	82,55	120,65	50,80	14,600	13,56	**PHS 80-1B44**
		45	378,46	A	31,75	–	–	–	–	14,600	11,43	**PHS 80-1A45**
			378,46	B	–	31,75	82,55	120,65	50,80	14,600	14,24	**PHS 80-1B45**
		46	386,59	A	31,75	–	–	–	–	14,600	12,07	**PHS 80-1A46**
			386,59	B	–	31,75	82,55	120,65	50,80	14,600	15,01	**PHS 80-1B46**
		47	394,72	A	31,75	–	–	–	–	14,600	11,97	**PHS 80-1A47**
			394,72	B	–	31,75	82,55	120,65	50,80	14,600	15,42	**PHS 80-1B47**
		48	402,84	A	31,75	–	–	–	–	14,600	12,61	**PHS 80-1A48**
			402,84	B	–	31,75	82,55	120,65	50,80	14,600	16,10	**PHS 80-1B48**
		49	410,97	A	31,75	–	–	–	–	14,600	13,11	**PHS 80-1A49**
			410,97	B	–	31,75	82,55	120,65	50,80	14,600	16,24	**PHS 80-1B49**
		50	419,10	A	31,75	–	–	–	–	14,600	14,02	**PHS 80-1A50**
			419,10	B	–	31,75	82,55	120,65	50,80	14,600	16,92	**PHS 80-1B50**
		51	426,97	A	31,75	–	–	–	–	14,600	14,61	**PHS 80-1A51**
			426,97	B	–	31,75	82,55	120,65	50,80	14,600	17,51	**PHS 80-1B51**
		52	435,10	A	31,75	–	–	–	–	14,600	14,97	**PHS 80-1A52**
			435,10	B	–	31,75	82,55	120,65	50,80	14,600	17,87	**PHS 80-1B52**
		53	443,23	A	31,75	–	–	–	–	14,600	15,83	**PHS 80-1A53**
			443,23	B	–	31,75	82,55	120,65	50,80	14,600	18,73	**PHS 80-1B53**
		54	451,36	A	31,75	–	–	–	–	14,600	16,60	**PHS 80-1A54**
			451,36	B	–	31,75	88,90	133,35	50,80	14,600	20,28	**PHS 80-1B54**
		55	459,49	A	31,75	–	–	–	–	14,600	17,01	**PHS 80-1A55**
			459,49	B	–	31,75	88,90	133,35	50,80	14,600	20,68	**PHS 80-1B55**
		56	467,61	A	31,75	–	–	–	–	14,600	17,87	**PHS 80-1A56**

Maximum bores can accommodate standard keyways. Larger bores are available where a shallow keyway is used or no keyway is required.
All Type B or C sprockets, up to and including 25 tooth, are with hardened teeth as standard.
For any additional size sprockets with hardened teeth, add "H" before the number of teeth, e.g. PHS 25-1BH9.

ANSI sprockets, simplex, pilot bore

ANSI 80-1 · 25,40 mm (1") pitch | ANSI 100-1 · 31,75 mm (1¼") pitch

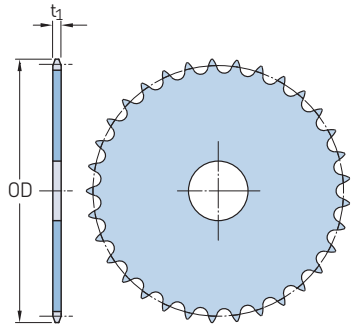

Type A

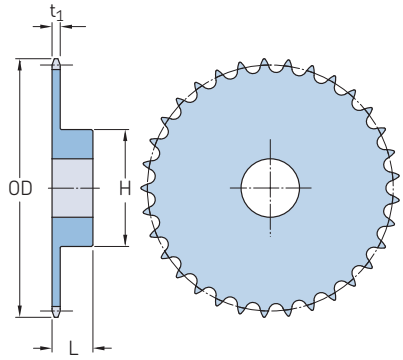

Type B

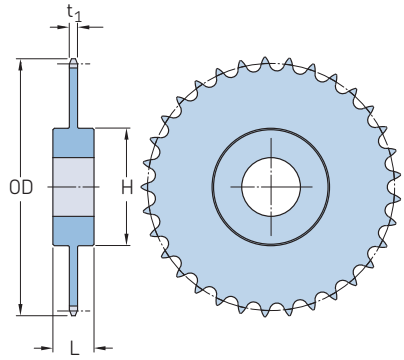

Type C

Pitch		Number of teeth	Outside diameter	Type	Dimensions Bore stock	Bore		Hub		Plate thickness	Mass	Designation
			OD			Min.	Max.	H	L	t_1		
mm	in.	–	mm	–	mm						kg	–
25,40	**1**	**56**	467,61	B	–	31,75	88,90	133,35	50,80	14,600	21,55	**PHS 80-1B56**
		57	475,74	A	31,75	–	–	–	–	14,600	18,33	**PHS 80-1A57**
			475,74	B	–	31,75	88,90	133,35	50,80	14,600	22,00	**PHS 80-1B57**
		58	483,62	A	31,75	–	–	–	–	14,600	18,73	**PHS 80-1A58**
			483,62	B	–	31,75	88,90	133,35	50,80	14,600	22,91	**PHS 80-1B58**
		59	491,74	A	31,75	–	–	–	–	14,600	19,46	**PHS 80-1A59**
			491,74	B	–	31,75	88,90	133,35	50,80	14,600	23,63	**PHS 80-1B59**
		60	499,87	A	31,75	–	–	–	–	14,600	20,55	**PHS 80-1A60**
			499,87	B	–	31,75	88,90	133,35	50,80	14,600	24,72	**PHS 80-1B60**
		65	540,26	A	31,75	–	–	–	–	14,600	23,68	**PHS 80-1A65**
			540,26	B	–	31,75	88,90	133,35	50,80	14,600	28,03	**PHS 80-1B65**
		70	580,90	A	38,10	–	–	–	–	14,600	27,12	**PHS 80-1A70**
			580,90	C	–	38,10	107,95	158,75	88,90	14,600	34,34	**PHS 80-1C70**
		72	596,90	A	38,10	–	–	–	–	14,600	29,80	**PHS 80-1A72**
			596,90	C	–	38,10	107,95	158,75	88,90	14,600	36,92	**PHS 80-1C72**
		76	629,41	A	38,10	–	–	–	–	14,600	31,84	**PHS 80-1A76**
			629,41	C	–	38,10	107,95	158,75	88,90	14,600	39,83	**PHS 80-1C76**
		80	661,67	A	38,10	–	–	–	–	14,600	36,11	**PHS 80-1A80**
			661,67	C	–	38,10	107,95	158,75	88,90	14,600	40,78	**PHS 80-1C80**
		84	694,18	A	38,10	–	–	–	–	14,600	39,05	**PHS 80-1A84**
			694,18	C	–	38,10	107,95	158,75	88,90	14,600	45,00	**PHS 80-1C84**
		90	742,70	A	38,10	–	–	–	–	14,600	45,81	**PHS 80-1A90**
			742,70	C	–	38,10	107,95	158,75	88,90	14,600	48,08	**PHS 80-1C90**
		96	791,21	A	38,10	–	–	–	–	14,600	54,43	**PHS 80-1A96**
			791,21	C	–	38,10	107,95	158,75	88,90	14,600	53,07	**PHS 80-1C96**
		112	920,50	A	38,10	–	–	–	–	14,600	74,84	**PHS 80-1A112**
			920,50	C	–	38,10	107,95	158,75	88,90	14,600	69,85	**PHS 80-1C112**
31,75	**1 ¼**	**7**	85,09	A	25,40	–	–	–	–	17,580	0,54	**PHS 100-1A7**
		8	95,76	A	25,40	–	–	–	–	17,580	0,64	**PHS 100-1A8**
			95,76	B	–	25,40	31,75	61,91	47,63	17,580	1,04	**PHS 100-1BH8**
		9	106,17	A	25,40	–	–	–	–	17,580	0,73	**PHS 100-1A9**
			106,17	B	–	25,40	41,28	71,44	47,63	17,580	1,45	**PHS 100-1BH9**
		10	116,84	A	25,40	–	–	–	–	17,580	0,91	**PHS 100-1A10**
			116,84	B	–	25,40	47,63	82,55	47,63	17,580	1,86	**PHS 100-1BH10**
		11	127,25	A	31,75	–	–	–	–	17,580	1,13	**PHS 100-1A11**
			127,25	B	–	25,40	57,15	90,49	47,63	17,580	2,40	**PHS 100-1BH11**
		12	137,67	A	31,75	–	–	–	–	17,580	1,36	**PHS 100-1A12**
			137,67	B	–	25,40	57,15	101,60	47,63	17,580	2,90	**PHS 100-1BH12**
		13	147,83	A	31,75	–	–	–	–	17,580	1,59	**PHS 100-1A13**
			147,83	B	–	25,40	60,33	98,43	41,28	17,580	2,99	**PHS 100-1BH13**
		14	158,24	A	31,75	–	–	–	–	17,580	1,86	**PHS 100-1A14**
			158,24	B	–	31,75	69,85	106,36	41,28	17,580	3,36	**PHS 100-1BH14**

Maximum bores can accommodate standard keyways. Larger bores are available where a shallow keyway is used or no keyway is required.
All Type B or C sprockets, up to and including 25 tooth, are with hardened teeth as standard.
For any additional size sprockets with hardened teeth, add "H" before the number of teeth, e.g. PHS 25-1BH9.

ANSI sprockets, simplex, pilot bore

ANSI 100-1 · 31,75 mm (1¼") pitch

Pitch		Number of teeth	Outside diameter	Type	Dimensions						Mass	Designation
					Bore stock	Bore		Hub		Plate thickness		
			OD			Min.	Max.	H	L	t_1		
mm	in.	–	mm	–	mm						kg	–
31,75	**1 ¼**	**15**	168,40	A	31,75	–	–	–	–	17,580	2,13	**PHS 100-1A15**
			168,40	B	–	31,75	76,20	114,30	44,45	17,580	4,17	**PHS 100-1BH15**
		16	178,56	A	31,75	–	–	–	–	17,580	2,45	**PHS 100-1A16**
			178,56	B	–	33,34	76,20	114,30	44,45	17,580	4,49	**PHS 100-1BH16**
		17	188,98	A	31,75	–	–	–	–	17,580	2,77	**PHS 100-1A17**
			188,98	B	–	33,34	76,20	114,30	44,45	17,580	4,90	**PHS 100-1BH17**
		18	199,14	A	31,75	–	–	–	–	17,580	3,18	**PHS 100-1A18**
			199,14	B	–	33,34	76,20	114,30	44,45	17,580	5,22	**PHS 100-1BH18**
		19	209,30	A	31,75	–	–	–	–	17,580	3,54	**PHS 100-1A19**
			209,30	B	–	33,34	76,20	114,30	50,80	17,580	5,94	**PHS 100-1BH19**
		20	219,46	A	31,75	–	–	–	–	17,580	3,99	**PHS 100-1A20**
			219,46	B	–	33,34	76,20	114,30	50,80	17,580	6,44	**PHS 100-1BH20**
		21	229,62	A	31,75	–	–	–	–	17,580	4,45	**PHS 100-1A21**
			229,62	B	–	33,34	76,20	114,30	50,80	17,580	6,94	**PHS 100-1BH21**
		22	239,78	A	31,75	–	–	–	–	17,580	4,76	**PHS 100-1A22**
			239,78	B	–	33,34	76,20	114,30	50,80	17,580	7,30	**PHS 100-1BH22**
		23	249,94	A	31,75	–	–	–	–	17,580	5,35	**PHS 100-1A23**
			249,94	B	–	31,75	76,20	114,30	50,80	17,580	7,80	**PHS 100-1BH23**
		24	260,35	A	31,75	–	–	–	–	17,580	5,81	**PHS 100-1A24**
			260,35	B	–	31,75	76,20	114,30	50,80	17,580	8,71	**PHS 100-1BH24**
		25	270,51	A	31,75	–	–	–	–	17,580	6,30	**PHS 100-1A25**
			270,51	B	–	31,75	76,20	114,30	50,80	17,580	8,85	**PHS 100-1BH25**
		26	280,67	A	31,75	–	–	–	–	17,580	6,80	**PHS 100-1A26**
			280,67	B	–	31,75	84,14	127,00	50,80	17,580	9,84	**PHS 100-1B26**
		27	290,58	A	31,75	–	–	–	–	17,580	7,26	**PHS 100-1A27**
			290,58	B	–	31,75	84,14	127,00	50,80	17,580	10,43	**PHS 100-1B27**
		28	300,74	A	31,75	–	–	–	–	17,580	7,89	**PHS 100-1A28**
			300,74	B	–	31,75	84,14	127,00	50,80	17,580	11,07	**PHS 100-1B28**
		29	310,90	A	31,75	–	–	–	–	17,580	8,89	**PHS 100-1A29**
			310,90	B	–	31,75	84,14	127,00	50,80	17,580	11,34	**PHS 100-1B29**
		30	321,06	A	31,75	–	–	–	–	17,580	9,12	**PHS 100-1A30**
			321,06	B	–	31,75	84,14	127,00	50,80	17,580	12,20	**PHS 100-1B30**
		31	331,22	A	31,75	–	–	–	–	17,580	9,75	**PHS 100-1A31**
		32	341,38	A	31,75	–	–	–	–	17,580	10,25	**PHS 100-1A32**
			341,38	B	–	31,75	84,14	127,00	50,80	17,580	13,52	**PHS 100-1B32**
		33	351,54	A	31,75	–	–	–	–	17,580	10,93	**PHS 100-1A33**
		34	361,70	A	31,75	–	–	–	–	17,580	11,79	**PHS 100-1A34**
		35	371,86	A	31,75	–	–	–	–	17,580	12,34	**PHS 100-1A35**
			371,86	B	–	31,75	84,14	127,00	63,50	17,580	16,74	**PHS 100-1B35**
		36	382,02	A	31,75	–	–	–	–	17,580	13,61	**PHS 100-1A36**
			382,02	B	–	31,75	84,14	127,00	63,50	17,580	17,51	**PHS 100-1B36**
		37	392,18	A	31,75	–	–	–	–	17,580	14,06	**PHS 100-1A37**
		38	402,34	A	31,75	–	–	–	–	17,580	14,97	**PHS 100-1A38**
			402,34	B	–	31,75	84,14	127,00	63,50	17,580	18,82	**PHS 100-1B38**
		39	412,24	A	31,75	–	–	–	–	17,580	15,88	**PHS 100-1A39**
			412,24	B	–	31,75	84,14	127,00	63,50	17,580	19,78	**PHS 100-1B39**
		40	422,40	A	31,75	–	–	–	–	17,580	16,33	**PHS 100-1A40**
			422,40	B	–	31,75	84,14	127,00	63,50	17,580	21,27	**PHS 100-1B40**
		41	432,56	A	31,75	–	–	–	–	17,580	17,69	**PHS 100-1A41**
		42	442,72	A	31,75	–	–	–	–	17,580	18,14	**PHS 100-1A42**
			442,72	B	–	31,75	84,14	127,00	63,50	17,580	22,86	**PHS 100-1B42**
		43	452,88	A	38,10	–	–	–	–	17,580	19,50	**PHS 100-1A43**
		44	463,04	A	38,10	–	–	–	–	17,580	20,41	**PHS 100-1A44**
		45	473,20	A	38,10	–	–	–	–	17,580	21,32	**PHS 100-1A45**
			473,20	B	–	38,10	84,14	127,00	63,50	17,580	24,49	**PHS 100-1B45**
		46	483,11	A	38,10	–	–	–	–	17,580	21,77	**PHS 100-1A46**

Maximum bores can accommodate standard keyways. Larger bores are available where a shallow keyway is used or no keyway is required.
All Type B or C sprockets, up to and including 25 tooth, are with hardened teeth as standard.
For any additional size sprockets with hardened teeth, add "H" before the number of teeth, e.g. PHS 25-1BH9.

ANSI sprockets, simplex, pilot bore

ANSI 100-1 · 31,75 mm (1¼") pitch | ANSI 120-1 · 38,10 mm (1½") pitch

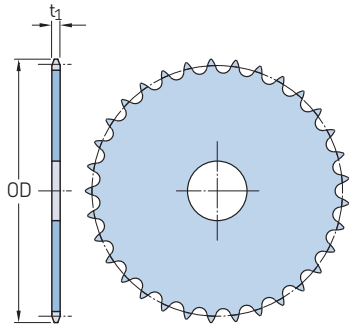

Type A

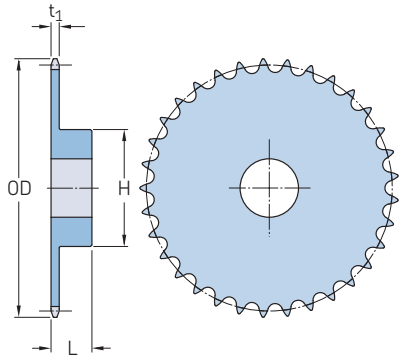

Type B

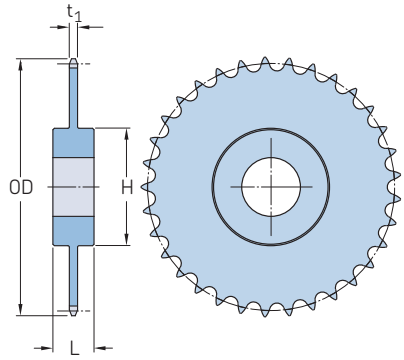

Type C

Pitch		Number of teeth	Outside diameter	Type	Dimensions						Mass	Designation
					Bore stock	Bore		Hub		Plate thickness		
			OD			Min.	Max.	H	L	t_1		
mm	in.	–	mm	–	mm						kg	–
31,75	**1 ¼**	**47**	493,27	A	38,10	–	–	–	–	17,580	23,59	**PHS 100-1A47**
		48	503,43	A	38,10	–	–	–	–	17,580	24,49	**PHS 100-1A48**
			503,43	B	–	38,10	101,60	152,40	63,50	17,580	29,94	**PHS 100-1B48**
		49	513,59	A	38,10	–	–	–	–	17,580	25,40	**PHS 100-1A49**
		50	523,75	A	38,10	–	–	–	–	17,580	25,85	**PHS 100-1A50**
		51	533,91	A	38,10	–	–	–	–	17,580	28,58	**PHS 100-1A51**
		52	544,07	A	38,10	–	–	–	–	17,580	29,03	**PHS 100-1A52**
		53	553,97	A	38,10	–	–	–	–	17,580	29,12	**PHS 100-1A53**
		54	564,13	A	38,10	–	–	–	–	17,580	30,84	**PHS 100-1A54**
			564,13	C	–	38,10	101,60	152,40	82,55	17,580	35,38	**PHS 100-1C54**
		55	574,29	A	38,10	–	–	–	–	17,580	31,75	**PHS 100-1A55**
		56	584,45	A	38,10	–	–	–	–	17,580	32,66	**PHS 100-1A56**
		57	594,61	A	38,10	–	–	–	–	17,580	34,38	**PHS 100-1A57**
		58	604,77	A	38,10	–	–	–	–	17,580	34,47	**PHS 100-1A58**
		59	614,68	A	38,10	–	–	–	–	17,580	34,93	**PHS 100-1A59**
		60	624,84	A	38,10	–	–	–	–	17,580	36,29	**PHS 100-1A60**
			624,84	C	–	38,10	101,60	152,40	82,55	17,580	40,37	**PHS 100-1C60**
		70	725,93	A	38,10	–	–	–	–	17,580	51,26	**PHS 100-1A70**
			725,93	C	–	38,10	133,35	177,80	95,25	17,580	56,70	**PHS 100-1C70**
		72	746,25	A	38,10	–	–	–	–	17,580	53,98	**PHS 100-1A72**
			746,25	C	–	38,10	133,35	177,80	95,25	17,580	60,78	**PHS 100-1C72**
		76	786,64	A	38,10	–	–	–	–	17,580	60,33	**PHS 100-1A76**
			786,64	C	–	38,10	133,35	177,80	95,25	17,580	64,86	**PHS 100-1C76**
		80	827,28	A	38,10	–	–	–	–	17,580	66,22	**PHS 100-1A80**
			827,28	C	–	38,10	133,35	177,80	95,25	17,580	68,49	**PHS 100-1C80**
		84	867,66	A	38,10	–	–	–	–	17,580	73,48	**PHS 100-1A84**
			867,66	C	–	38,10	133,35	177,80	95,25	17,580	77,11	**PHS 100-1C84**
		90	928,37	A	38,10	–	–	–	–	17,580	87,54	**PHS 100-1A90**
			928,37	C	–	38,10	133,35	177,80	95,25	17,580	83,46	**PHS 100-1C90**
		96	988,82	A	38,10	–	–	–	–	17,580	97,52	**PHS 100-1A96**
			988,82	C	–	38,10	133,35	177,80	114,30	17,580	92,08	**PHS 100-1C96**
38,10	**1 ½**	**8**	114,81	A	31,75	–	–	–	–	23,470	1,09	**PHS 120-1A8**
		9	127,51	A	31,75	–	–	–	–	23,470	1,36	**PHS 120-1A9**
			127,51	B	–	34,93	46,04	85,73	57,15	23,470	2,40	**PHS 120-1BH9**
		10	140,21	A	31,75	–	–	–	–	23,470	1,72	**PHS 120-1A10**
			140,21	B	–	34,93	57,15	95,25	57,15	23,470	3,22	**PHS 120-1BH10**
		11	152,65	A	31,75	–	–	–	–	23,470	2,18	**PHS 120-1A11**
			152,65	B	–	34,93	60,33	90,49	53,98	23,470	3,45	**PHS 120-1BH11**
		12	165,10	A	31,75	–	–	–	–	23,470	2,63	**PHS 120-1A12**

Maximum bores can accommodate standard keyways. Larger bores are available where a shallow keyway is used or no keyway is required.
All Type B or C sprockets, up to and including 25 tooth, are with hardened teeth as standard.
For any additional size sprockets with hardened teeth, add "H" before the number of teeth, e.g. PHS 25-1BH9.

ANSI sprockets, simplex, pilot bore

ANSI 120-1 · 38,10 mm (1 1/2") pitch

Pitch		Number of teeth	Outside diameter	Type	Dimensions						Mass	Designation
					Bore stock	Bore		Hub		Plate thickness		
			OD			Min.	Max.	H	L	t_1		
mm	in.	–	mm	–	mm						kg	–
38,10	**1 1/2**	**12**	165,10	B	–	34,93	69,85	104,78	53,98	23,470	4,49	**PHS 120-1BH12**
		13	177,55	A	31,75	–	–	–	–	23,470	3,04	**PHS 120-1A13**
			177,55	B	–	34,93	76,20	115,89	57,15	23,470	5,62	**PHS 120-1BH13**
		14	189,74	A	31,75	–	–	–	–	23,470	3,63	**PHS 120-1A14**
			189,74	B	–	34,93	82,55	120,65	57,15	23,470	6,53	**PHS 120-1BH14**
		15	202,18	A	31,75	–	–	–	–	23,470	4,13	**PHS 120-1A15**
			202,18	B	–	31,75	82,55	120,65	60,33	23,470	7,57	**PHS 120-1BH15**
		16	214,38	A	31,75	–	–	–	–	23,470	4,81	**PHS 120-1A16**
			214,38	B	–	31,75	88,90	133,35	60,33	23,470	9,03	**PHS 120-1BH16**
		17	226,57	A	31,75	–	–	–	–	23,470	5,72	**PHS 120-1A17**
			226,57	B	–	31,75	88,90	133,35	60,33	23,470	9,43	**PHS 120-1BH17**
		18	239,01	A	31,75	–	–	–	–	23,470	6,17	**PHS 120-1A18**
			239,01	B	–	31,75	88,90	133,35	60,33	23,470	10,07	**PHS 120-1BH18**
		19	251,21	A	31,75	–	–	–	–	23,470	6,85	**PHS 120-1A19**
			251,21	B	–	31,75	88,90	133,35	60,33	23,470	11,25	**PHS 120-1BH19**
		20	263,40	A	31,75	–	–	–	–	23,470	7,67	**PHS 120-1A20**
			263,40	B	–	31,75	88,90	133,35	60,33	23,470	11,70	**PHS 120-1BH20**
		21	275,59	A	31,75	–	–	–	–	23,470	8,48	**PHS 120-1A21**
			275,59	B	–	31,75	88,90	133,35	60,33	23,470	12,11	**PHS 120-1BH21**
		22	287,78	A	31,75	–	–	–	–	23,470	9,07	**PHS 120-1A22**
			287,78	B	–	31,75	88,90	133,35	60,33	23,470	12,79	**PHS 120-1BH22**
		23	299,97	A	31,75	–	–	–	–	23,470	10,02	**PHS 120-1A23**
			299,97	B	–	31,75	88,90	133,35	60,33	23,470	13,74	**PHS 120-1BH23**
		24	312,17	A	31,75	–	–	–	–	23,470	11,25	**PHS 120-1A24**
			312,17	B	–	31,75	88,90	133,35	60,33	23,470	14,56	**PHS 120-1BH24**
		25	324,36	A	31,75	–	–	–	–	23,470	12,16	**PHS 120-1A25**
			324,36	B	–	31,75	88,90	133,35	60,33	23,470	15,69	**PHS 120-1BH25**
		26	336,55	A	38,10	–	–	–	–	23,470	12,84	**PHS 120-1A26**
			336,55	B	–	38,10	101,60	152,40	63,50	23,470	18,14	**PHS 120-1B26**
		27	348,74	A	38,10	–	–	–	–	23,470	14,02	**PHS 120-1A27**
		28	360,93	A	38,10	–	–	–	–	23,470	15,24	**PHS 120-1A28**
			360,93	B	–	38,10	101,60	152,40	63,50	23,470	20,37	**PHS 120-1B28**
		30	385,32	A	38,10	–	–	–	–	23,470	17,69	**PHS 120-1A30**
			385,32	B	–	38,10	101,60	152,40	63,50	23,470	22,77	**PHS 120-1B30**
		32	409,70	A	38,10	–	–	–	–	23,470	19,91	**PHS 120-1A32**
			409,70	B	–	38,10	101,60	152,40	63,50	23,470	25,40	**PHS 120-1B32**
		33	421,89	A	38,10	–	–	–	–	23,470	21,86	**PHS 120-1A33**
		34	434,09	A	38,10	–	–	–	–	23,470	22,68	**PHS 120-1A34**
		35	446,28	A	38,10	–	–	–	–	23,470	23,59	**PHS 120-1A35**
			446,28	B	–	38,10	101,60	152,40	63,50	23,470	28,30	**PHS 120-1B35**
		36	458,47	A	38,10	–	–	–	–	23,470	25,40	**PHS 120-1A36**
			458,47	B	–	38,10	101,60	152,40	63,50	23,470	30,12	**PHS 120-1B36**
		40	506,98	A	38,10	–	–	–	–	23,470	32,21	**PHS 120-1A40**
			506,98	C	–	38,10	101,60	152,40	95,25	23,470	41,73	**PHS 120-1C40**
		42	531,37	A	38,10	–	–	–	–	23,470	34,02	**PHS 120-1A42**
			531,37	C	–	38,10	101,60	152,40	95,25	23,470	44,45	**PHS 120-1C42**
		45	567,69	A	38,10	–	–	–	–	23,470	39,92	**PHS 120-1A45**
			567,69	C	–	38,10	101,60	152,40	95,25	23,470	45,00	**PHS 120-1C45**
		48	604,27	A	38,10	–	–	–	–	23,470	46,72	**PHS 120-1A48**
			604,27	C	–	38,10	101,60	152,40	101,60	23,470	51,26	**PHS 120-1C48**
		54	676,91	A	38,10	–	–	–	–	23,470	63,50	**PHS 120-1A54**
			676,91	C	–	38,10	101,60	152,40	101,60	23,470	60,33	**PHS 120-1C54**
		60	749,81	A	38,10	–	–	–	–	23,470	72,57	**PHS 120-1A60**
			749,81	C	–	38,10	133,35	177,80	101,60	23,470	72,57	**PHS 120-1C60**
		70	871,22	A	38,10	–	–	–	–	23,470	97,98	**PHS 120-1A70**
			871,22	C	–	38,10	136,53	190,50	114,30	23,470	93,44	**PHS 120-1C70**
		80	992,63	A	38,10	–	–	–	–	23,470	128,82	**PHS 120-1A80**
			992,63	C	–	38,10	136,53	190,50	114,30	23,470	115,21	**PHS 120-1C80**

Maximum bores can accommodate standard keyways. Larger bores are available where a shallow keyway is used or no keyway is required.
All Type B or C sprockets, up to and including 25 tooth, are with hardened teeth as standard.
For any additional size sprockets with hardened teeth, add "H" before the number of teeth, e.g. PHS 25-1BH9.

ANSI sprockets, simplex, pilot bore

ANSI 120-1 · 38,10 mm (1½") pitch | ANSI 140-1 · 44,45 mm (1¾") pitch

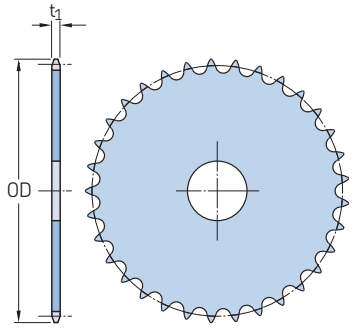

Type A

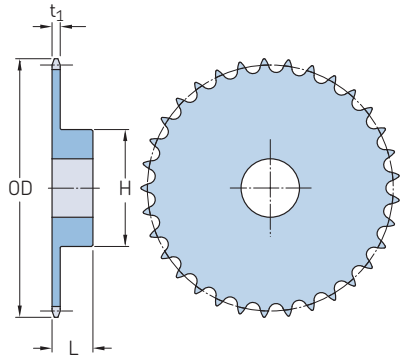

Type B

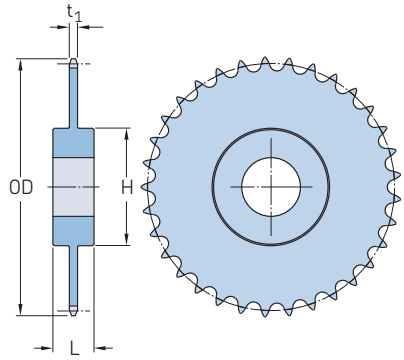

Type C

Pitch		Number of teeth	Outside diameter	Type	Dimensions						Mass	Designation
					Bore stock	Bore		Hub		Plate thickness		
			OD			Min.	Max.	H	L	t_1		
mm	in.	–	mm	–	mm						kg	–
38,10	**1 ½**	**90**	1113,79	A	38,10	–	–	–	–	23,470	162,39	**PHS 120-1A90**
44,45	**1 ¾**	**11**	178,05	A	38,10	–	–	–	–	23,470	2,27	**PHS 140-1A11**
			178,05	B	–	38,10	69,85	107,95	57,15	23,470	5,13	**PHS 140-1BH11**
		12	192,53	A	38,10	–	–	–	–	23,470	3,54	**PHS 140-1A12**
			192,53	B	–	38,10	76,20	114,30	57,15	23,470	5,99	**PHS 140-1BH12**
		13	207,01	A	38,10	–	–	–	–	23,470	3,72	**PHS 140-1A13**
			207,01	B	–	38,10	95,25	139,70	60,33	23,470	8,57	**PHS 140-1BH13**
		14	221,49	A	38,10	–	–	–	–	23,470	4,54	**PHS 140-1A14**
			221,49	B	–	38,10	95,25	139,70	60,33	23,470	9,25	**PHS 140-1BH14**
		15	235,71	A	38,10	–	–	–	–	23,470	4,99	**PHS 140-1A15**
			235,71	B	–	38,10	107,95	158,75	60,33	23,470	11,39	**PHS 140-1BH15**
		16	250,19	A	38,10	–	–	–	–	23,470	6,35	**PHS 140-1A16**
			250,19	B	–	38,10	107,95	158,75	63,50	23,470	12,66	**PHS 140-1BH16**
		17	264,41	A	38,10	–	–	–	–	23,470	7,26	**PHS 140-1A17**
			264,41	B	–	38,10	107,95	158,75	63,50	23,470	13,52	**PHS 140-1BH17**
		18	278,89	A	38,10	–	–	–	–	23,470	8,16	**PHS 140-1A18**
			278,89	B	–	38,10	107,95	158,75	63,50	23,470	14,51	**PHS 140-1BH18**
		19	293,12	A	38,10	–	–	–	–	23,470	9,53	**PHS 140-1A19**
			293,12	B	–	38,10	107,95	158,75	63,50	23,470	15,47	**PHS 140-1BH19**
		20	307,34	A	38,10	–	–	–	–	23,470	10,43	**PHS 140-1A20**
			307,34	B	–	38,10	107,95	158,75	63,50	23,470	16,33	**PHS 140-1BH20**
		21	321,56	A	38,10	–	–	–	–	23,470	11,34	**PHS 140-1A21**
			321,56	B	–	38,10	107,95	158,75	63,50	23,470	17,55	**PHS 140-1BH21**
		22	335,79	A	38,10	–	–	–	–	23,470	12,70	**PHS 140-1A22**
			335,79	B	–	38,10	107,95	158,75	63,50	23,470	18,42	**PHS 140-1BH22**
		23	350,01	A	38,10	–	–	–	–	23,470	13,61	**PHS 140-1A23**
			350,01	B	–	38,10	107,95	158,75	63,50	23,470	19,10	**PHS 140-1BH23**
		24	364,24	A	38,10	–	–	–	–	23,470	14,97	**PHS 140-1A24**
			364,24	B	–	38,10	107,95	158,75	63,50	23,470	20,96	**PHS 140-1BH24**
		25	378,46	A	38,10	–	–	–	–	23,470	15,42	**PHS 140-1A25**
			378,46	B	–	38,10	107,95	158,75	63,50	23,470	21,68	**PHS 140-1BH25**
		26	392,68	A	38,10	–	–	–	–	23,470	17,69	**PHS 140-1A26**
			392,68	B	–	38,10	107,95	158,75	76,20	23,470	25,95	**PHS 140-1B26**
		27	406,91	A	38,10	–	–	–	–	23,470	18,60	**PHS 140-1A27**
			406,91	B	–	38,10	107,95	158,75	76,20	23,470	26,54	**PHS 140-1B27**
		28	421,13	A	38,10	–	–	–	–	23,470	20,41	**PHS 140-1A28**
			421,13	B	–	38,10	107,95	158,75	76,20	23,470	28,21	**PHS 140-1B28**
		30	449,58	A	38,10	–	–	–	–	23,470	23,59	**PHS 140-1A30**
			449,58	B	–	38,10	107,95	158,75	76,20	23,470	31,66	**PHS 140-1B30**
		31	463,80	A	44,45	38,10	–	–	–	23,470	25,40	**PHS 140-1A31**
		32	478,03	A	38,10	–	–	–	–	23,470	27,22	**PHS 140-1A32**
			478,03	B	–	38,10	107,95	158,75	76,20	23,470	34,61	**PHS 140-1B32**

Maximum bores can accommodate standard keyways. Larger bores are available where a shallow keyway is used or no keyway is required.
All Type B or C sprockets, up to and including 25 tooth, are with hardened teeth as standard.
For any additional size sprockets with hardened teeth, add "H" before the number of teeth, e.g. PHS 25-1BH9.

ANSI sprockets, simplex, pilot bore

ANSI 140-1 · 44,45 mm (1¾") pitch | ANSI 160-1 · 50,80 mm (2") pitch

Pitch		Number of teeth	Outside diameter	Type	Dimensions						Mass	Designation
					Bore stock	Bore		Hub		Plate thickness		
			OD			Min.	Max.	H	L	t_1		
mm	in.	–	mm	–	mm						kg	–
44,45	**1 ¾**	**35**	520,45	A	38,10	–	–	–	–	23,470	33,11	**PHS 140-1A35**
			520,45	C	–	38,10	133,35	177,80	101,60	23,470	48,99	**PHS 140-1C35**
		36	534,67	A	44,45	38,10	–	–	–	23,470	34,93	**PHS 140-1A36**
		40	591,57	A	38,10	–	–	–	–	23,470	42,18	**PHS 140-1A40**
			591,57	C	–	38,10	133,35	177,80	101,60	23,470	54,88	**PHS 140-1C40**
		45	662,43	A	38,10	–	–	–	–	23,470	59,42	**PHS 140-1A45**
			662,43	C	–	38,10	133,35	177,80	101,60	23,470	64,41	**PHS 140-1C45**
		48	704,85	A	38,10	–	–	–	–	23,470	60,78	**PHS 140-1A48**
			704,85	C	–	38,10	133,35	177,80	101,60	23,470	68,04	**PHS 140-1C48**
		54	789,94	A	38,10	–	–	–	–	23,470	78,47	**PHS 140-1A54**
			789,94	C	–	38,10	133,35	177,80	101,60	23,470	80,29	**PHS 140-1C54**
		60	874,78	A	38,10	–	–	–	–	23,470	99,34	**PHS 140-1A60**
			874,78	C	–	38,10	133,35	177,80	127,00	23,470	99,79	**PHS 140-1C60**
		70	1016,51	A	38,10	–	–	–	–	23,470	132,45	**PHS 140-1A70**
			1016,51	C	–	38,10	136,53	190,50	127,00	23,470	127,91	**PHS 140-1C70**
		80	1157,99	A	38,10	–	–	–	–	23,470	182,34	**PHS 140-1A80**
			1157,99	C	–	38,10	136,53	190,50	127,00	23,470	150,14	**PHS 140-1C80**
50,80	**2**	**8**	153,16	A	38,10	–	–	–	–	29,360	2,27	**PHS 160-1A8**
			153,16	B	–	38,10	47,63	82,55	57,15	29,360	3,63	**PHS 160-1BH8**
		9	170,18	A	38,10	–	–	–	–	29,360	3,18	**PHS 160-1A9**
			170,18	B	–	38,10	53,98	92,08	57,15	29,360	4,54	**PHS 160-1BH9**
		10	186,94	A	38,10	–	–	–	–	29,360	3,63	**PHS 160-1A10**
			186,94	B	–	38,10	69,85	104,78	57,15	29,360	5,44	**PHS 160-1BH10**
		11	203,45	A	38,10	–	–	–	–	29,360	4,54	**PHS 160-1A11**
			203,45	B	–	38,10	82,55	120,65	63,50	29,360	7,71	**PHS 160-1BH11**
		12	219,96	A	38,10	–	–	–	–	29,360	5,44	**PHS 160-1A12**
			219,96	B	–	38,10	95,25	139,70	63,50	29,360	9,53	**PHS 160-1BH12**
		13	236,47	A	38,10	–	–	–	–	29,360	7,26	**PHS 160-1A13**
			236,47	B	–	38,10	101,60	152,40	69,85	29,360	12,70	**PHS 160-1BH13**
		14	252,98	A	38,10	–	–	–	–	29,360	7,71	**PHS 160-1A14**
			252,98	B	–	38,10	114,30	165,10	69,85	29,360	14,51	**PHS 160-1BH14**
		15	269,49	A	38,10	–	–	–	–	29,360	9,53	**PHS 160-1A15**
			269,49	B	–	38,10	133,35	177,80	69,85	29,360	16,78	**PHS 160-1BH15**
		16	286,00	A	38,10	–	–	–	–	29,360	10,89	**PHS 160-1A16**
			286,00	B	–	38,10	133,35	177,80	69,85	29,360	18,60	**PHS 160-1BH16**
		17	302,26	A	38,10	–	–	–	–	29,360	12,25	**PHS 160-1A17**
			302,26	B	–	38,10	133,35	177,80	69,85	29,360	20,41	**PHS 160-1BH17**
		18	318,52	A	38,10	–	–	–	–	29,360	13,61	**PHS 160-1A18**
			318,52	B	–	38,10	133,35	177,80	69,85	29,360	21,77	**PHS 160-1BH18**
		19	335,03	A	38,10	–	–	–	–	29,360	15,42	**PHS 160-1A19**
			335,03	B	–	38,10	133,35	177,80	69,85	29,360	23,59	**PHS 160-1BH19**
		20	351,28	A	38,10	–	–	–	–	29,360	17,24	**PHS 160-1A20**
			351,28	B	–	38,10	133,35	177,80	69,85	29,360	25,40	**PHS 160-1BH20**
		21	367,54	A	38,10	–	–	–	–	29,360	19,05	**PHS 160-1A21**
			367,54	B	–	38,10	133,35	177,80	69,85	29,360	26,76	**PHS 160-1BH21**
		22	383,79	A	38,10	–	–	–	–	29,360	20,87	**PHS 160-1A22**
			383,79	B	–	38,10	133,35	177,80	69,85	29,360	29,48	**PHS 160-1BH22**
		23	400,05	A	38,10	–	–	–	–	29,360	22,68	**PHS 160-1A23**
			400,05	B	–	38,10	133,35	177,80	69,85	29,360	30,84	**PHS 160-1BH23**
		24	416,31	A	38,10	–	–	–	–	29,360	25,40	**PHS 160-1A24**
			416,31	B	–	38,10	133,35	177,80	76,20	29,360	34,93	**PHS 160-1BH24**
		25	432,56	A	38,10	–	–	–	–	29,360	27,67	**PHS 160-1A25**
			432,56	B	–	38,10	133,35	177,80	76,20	29,360	36,74	**PHS 160-1BH25**
		26	448,82	A	38,10	–	–	–	–	29,360	29,48	**PHS 160-1A26**
			448,82	B	–	38,10	133,35	177,80	76,20	29,360	39,01	**PHS 160-1B26**
		27	465,07	A	38,10	–	–	–	–	29,360	32,21	**PHS 160-1A27**
			465,07	B	–	38,10	133,35	177,80	76,20	29,360	41,28	**PHS 160-1B27**
		28	481,33	A	38,10	–	–	–	–	29,360	34,93	**PHS 160-1A28**
			481,33	B	–	38,10	133,35	177,80	76,20	29,360	44,45	**PHS 160-1B28**

Maximum bores can accommodate standard keyways. Larger bores are available where a shallow keyway is used or no keyway is required.
All Type B or C sprockets, up to and including 25 tooth, are with hardened teeth as standard.
For any additional size sprockets with hardened teeth, add "H" before the number of teeth, e.g. PHS 25-1BH9.

ANSI sprockets, simplex, pilot bore

ANSI 160-1 · 50,80 mm (2”) pitch | ANSI 180-1 · 57,15 mm (2¼”) pitch

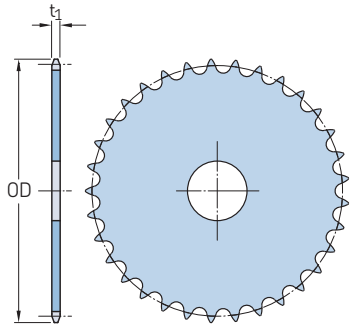

Type A

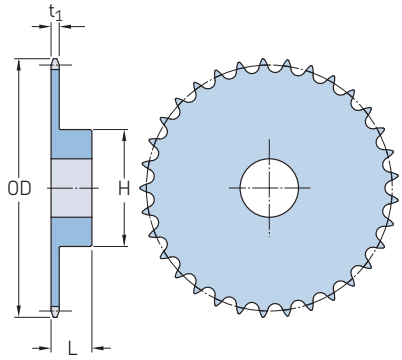

Type B

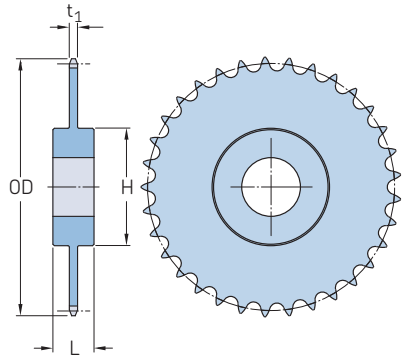

Type C

Pitch		Number of teeth	Outside diameter	Type	Dimensions Bore stock	Bore		Hub		Plate thickness	Mass	Designation
			OD			Min.	Max.	H	L	t_1		
mm	in.	–	mm	–	mm						kg	–
50,80	**2**	**30**	513,84	A	38,10	–	–	–	–	29,360	40,82	**PHS 160-1A30**
			513,84	B	–	38,10	133,35	177,80	76,20	29,360	48,99	**PHS 160-1B30**
		35	594,87	A	38,10	–	–	–	–	29,360	54,88	**PHS 160-1A35**
			594,87	C	–	38,10	139,70	203,20	114,30	29,360	69,85	**PHS 160-1C35**
		40	675,89	A	38,10	–	–	–	–	29,360	62,60	**PHS 160-1A40**
			675,89	C	–	38,10	139,70	203,20	114,30	29,360	88,90	**PHS 160-1C40**
		45	756,92	A	38,10	–	–	–	–	29,360	92,53	**PHS 160-1A45**
			756,92	C	–	38,10	139,70	203,20	127,00	29,360	106,14	**PHS 160-1C45**
		54	902,72	A	38,10	–	–	–	–	29,360	133,36	**PHS 160-1A54**
			902,72	C	–	38,10	139,70	203,20	127,00	29,360	125,19	**PHS 160-1C54**
		60	999,74	A	38,10	–	–	–	–	29,360	166,01	**PHS 160-1A60**
			999,74	C	–	38,10	139,70	203,20	127,00	29,360	149,23	**PHS 160-1C60**
		70	1161,54	A	38,10	–	–	–	–	29,360	229,97	**PHS 160-1A70**
			1161,54	C	–	38,10	139,70	203,20	127,00	29,360	202,30	**PHS 160-1C70**
		80	1323,34	A	38,10	–	–	–	–	29,360	297,56	**PHS 160-1A80**
			1323,34	C	–	38,10	139,70	203,20	152,40	29,360	277,60	**PHS 160-1C80**
57,15	**2 1/4**	**11**	228,85	A	38,10	–	–	–	–	33,050	6,35	**PHS 180-1A11**
			228,85	B	–	38,10	92,08	139,70	76,20	33,050	13,15	**PHS 180-1BH11**
		12	247,65	A	38,10	–	–	–	–	33,050	7,26	**PHS 180-1A12**
			247,65	B	–	38,10	101,60	152,40	76,20	33,050	14,51	**PHS 180-1BH12**
		13	266,19	A	38,10	–	–	–	–	33,050	9,07	**PHS 180-1A13**
			266,19	B	–	38,10	117,48	171,45	79,38	33,050	18,14	**PHS 180-1BH13**
		14	284,73	A	38,10	–	–	–	–	33,050	10,89	**PHS 180-1A14**
			284,73	B	–	38,10	133,35	177,80	79,38	33,050	19,96	**PHS 180-1BH14**
		15	303,02	A	38,10	–	–	–	–	33,050	12,70	**PHS 180-1A15**
			303,02	B	–	38,10	133,35	177,80	79,38	33,050	21,77	**PHS 180-1BH15**
		16	321,56	A	38,10	–	–	–	–	33,050	14,51	**PHS 180-1A16**
			321,56	B	–	38,10	133,35	177,80	79,38	33,050	23,59	**PHS 180-1BH16**
		17	340,11	A	38,10	–	–	–	–	33,050	16,78	**PHS 180-1A17**
			340,11	B	–	38,10	133,35	177,80	79,38	33,050	26,31	**PHS 180-1BH17**
		18	358,39	A	38,10	–	–	–	–	33,050	19,50	**PHS 180-1A18**
			358,39	B	–	38,10	133,35	177,80	79,38	33,050	28,58	**PHS 180-1BH18**
		19	376,68	A	38,10	–	–	–	–	33,050	21,32	**PHS 180-1A19**
			376,68	B	–	38,10	136,53	190,50	85,73	33,050	33,57	**PHS 180-1BH19**
		20	395,22	A	38,10	–	–	–	–	33,050	24,04	**PHS 180-1A20**
			395,22	B	–	38,10	136,53	190,50	85,73	33,050	36,74	**PHS 180-1BH20**
		21	413,51	A	38,10	–	–	–	–	33,050	25,85	**PHS 180-1A21**
			413,51	B	–	38,10	136,53	190,50	85,73	33,050	37,65	**PHS 180-1BH21**
		22	431,80	A	38,10	–	–	–	–	33,050	28,12	**PHS 180-1A22**
			431,80	B	–	38,10	136,53	190,50	85,73	33,050	41,73	**PHS 180-1BH22**
		23	450,09	A	38,10	–	–	–	–	33,050	31,30	**PHS 180-1A23**
			450,09	B	–	38,10	136,53	190,50	85,73	33,050	44,91	**PHS 180-1BH23**
		24	468,38	A	38,10	–	–	–	–	33,050	34,93	**PHS 180-1A24**

Maximum bores can accommodate standard keyways. Larger bores are available where a shallow keyway is used or no keyway is required.
All Type B or C sprockets, up to and including 25 tooth, are with hardened teeth as standard.
For any additional size sprockets with hardened teeth, add “H” before the number of teeth, e.g. PHS 25-1BH9.

ANSI sprockets, simplex, pilot bore

ANSI 180-1 · 57,15 mm (2¼") pitch | ANSI 200-1 · 63,50 mm (2½") pitch

Pitch		Number of teeth	Outside diameter	Type	Dimensions						Mass	Designation
					Bore stock	Bore		Hub		Plate thickness		
			OD			Min.	Max.	H	L	t_1		
mm	in.	–	mm	–	mm						kg	–
57,15	**2 ¼**	**24**	468,38	B	–	38,10	136,53	190,50	85,73	33,050	47,63	**PHS 180-1BH24**
		25	486,66	A	38,10	–	–	–	–	33,050	38,10	**PHS 180-1A25**
			486,66	B	–	38,10	136,53	190,50	85,73	33,050	51,26	**PHS 180-1BH25**
		28	541,53	A	38,10	–	–	–	–	33,050	47,17	**PHS 180-1A28**
			541,53	B	–	38,10	139,70	203,20	88,90	33,050	61,23	**PHS 180-1B28**
		30	578,10	A	38,10	–	–	–	–	33,050	54,43	**PHS 180-1A30**
			578,10	C	–	38,10	146,05	215,90	111,13	33,050	81,65	**PHS 180-1C30**
		35	669,29	A	38,10	–	–	–	–	33,050	78,02	**PHS 180-1A35**
			669,29	C	–	38,10	146,05	215,90	111,13	33,050	100,70	**PHS 180-1C35**
		40	760,48	A	38,10	–	–	–	–	33,050	103,87	**PHS 180-1A40**
			760,48	C	–	38,10	146,05	215,90	111,13	33,050	122,47	**PHS 180-1C40**
		45	851,66	A	38,10	–	–	–	–	33,050	128,82	**PHS 180-1A45**
			851,66	C	–	38,10	152,40	228,60	127,00	33,050	142,88	**PHS 180-1C45**
		54	1015,49	A	38,10	–	–	–	–	33,050	190,51	**PHS 180-1A54**
			1015,49	C	–	38,10	152,40	228,60	127,00	33,050	216,36	**PHS 180-1C54**
		60	1124,71	A	38,10	–	–	–	–	33,050	229,06	**PHS 180-1A60**
			1124,71	C	–	38,10	165,10	241,30	136,53	33,050	221,81	**PHS 180-1C60**
63,50	**2 ½**	**10**	233,68	A	38,10	–	–	–	–	35,280	7,26	**PHS 200-1A10**
			233,68	B	–	38,10	95,25	139,70	76,20	35,280	11,79	**PHS 200-1BH10**
		11	254,51	A	38,10	–	–	–	–	35,280	9,07	**PHS 200-1A11**
			254,51	B	–	38,10	101,60	152,40	76,20	35,280	14,97	**PHS 200-1BH11**
		12	275,08	A	38,10	–	–	–	–	35,280	10,89	**PHS 200-1A12**
			275,08	B	–	38,10	114,30	165,10	76,20	35,280	16,78	**PHS 200-1BH12**
		13	295,66	A	38,10	–	–	–	–	35,280	13,61	**PHS 200-1A13**
			295,66	B	–	38,10	133,35	177,80	76,20	35,280	20,87	**PHS 200-1BH13**
		14	316,48	A	38,10	–	–	–	–	35,280	14,51	**PHS 200-1A14**
			316,48	B	–	38,10	136,53	190,50	88,90	35,280	26,76	**PHS 200-1BH14**
		15	336,80	A	38,10	–	–	–	–	35,280	18,14	**PHS 200-1A15**
			336,80	B	–	38,10	136,53	190,50	88,90	35,280	29,03	**PHS 200-1BH15**
		16	357,38	A	38,10	–	–	–	–	35,280	20,87	**PHS 200-1A16**
			357,38	B	–	38,10	136,53	190,50	88,90	35,280	32,66	**PHS 200-1BH16**
		17	377,70	A	38,10	–	–	–	–	35,280	23,13	**PHS 200-1A17**
			377,70	B	–	38,10	136,53	190,50	88,90	35,280	34,47	**PHS 200-1BH17**
		18	398,27	A	38,10	–	–	–	–	35,280	25,85	**PHS 200-1A18**
			398,27	B	–	38,10	136,53	190,50	88,90	35,280	38,10	**PHS 200-1BH18**
		19	418,59	A	38,10	–	–	–	–	35,280	29,48	**PHS 200-1A19**
			418,59	B	–	38,10	136,53	190,50	88,90	35,280	41,28	**PHS 200-1BH19**
		20	439,17	A	38,10	–	–	–	–	35,280	32,66	**PHS 200-1A20**
			439,17	B	–	38,10	136,53	190,50	88,90	35,280	44,45	**PHS 200-1BH20**
		21	459,49	A	38,10	–	–	–	–	35,280	37,19	**PHS 200-1A21**
			459,49	B	–	38,10	136,53	190,50	88,90	35,280	48,08	**PHS 200-1BH21**
		22	479,81	A	38,10	–	–	–	–	35,280	39,92	**PHS 200-1A22**
			479,81	B	–	38,10	146,05	215,90	101,60	35,280	59,42	**PHS 200-1BH22**
		23	500,13	A	38,10	–	–	–	–	35,280	43,09	**PHS 200-1A23**
			500,13	B	–	38,10	146,05	215,90	101,60	35,280	61,69	**PHS 200-1BH23**
		24	520,45	A	38,10	–	–	–	–	35,280	47,63	**PHS 200-1A24**
			520,45	B	–	38,10	146,05	215,90	101,60	35,280	64,41	**PHS 200-1BH24**
		25	540,77	A	38,10	–	–	–	–	35,280	51,26	**PHS 200-1A25**
			540,77	B	–	38,10	146,05	215,90	101,60	35,280	69,40	**PHS 200-1BH25**
		26	561,09	A	38,10	–	–	–	–	35,280	56,25	**PHS 200-1A26**
			561,09	C	–	38,10	146,05	215,90	114,30	35,280	80,74	**PHS 200-1C26**
		28	601,73	A	38,10	–	–	–	–	35,280	65,32	**PHS 200-1A28**
			601,73	C	–	38,10	146,05	215,90	114,30	35,280	88,45	**PHS 200-1C28**
		30	642,37	A	38,10	–	–	–	–	35,280	75,75	**PHS 200-1A30**
			642,37	C	–	38,10	146,05	215,90	114,30	35,280	96,16	**PHS 200-1C30**
		32	682,75	A	38,10	–	–	–	–	35,280	88,45	**PHS 200-1A32**
			682,75	C	–	38,10	146,05	215,90	114,30	35,280	99,79	**PHS 200-1C32**
		35	743,71	A	38,10	–	–	–	–	35,280	102,97	**PHS 200-1A35**
			743,71	C	–	38,10	146,05	215,90	114,30	35,280	115,21	**PHS 200-1C35**

Maximum bores can accommodate standard keyways. Larger bores are available where a shallow keyway is used or no keyway is required.
All Type B or C sprockets, up to and including 25 tooth, are with hardened teeth as standard.
For any additional size sprockets with hardened teeth, add "H" before the number of teeth, e.g. PHS 25-1BH9.

ANSI sprockets, simplex, pilot bore

ANSI 200-1 · 63,50 mm (2 1/2") pitch | ANSI 240-1 · 76,20 mm (3") pitch

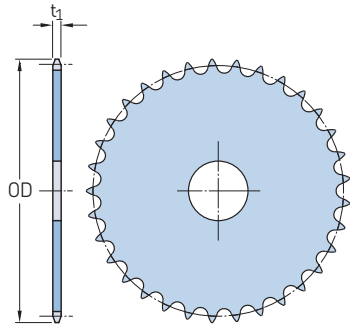

Type A

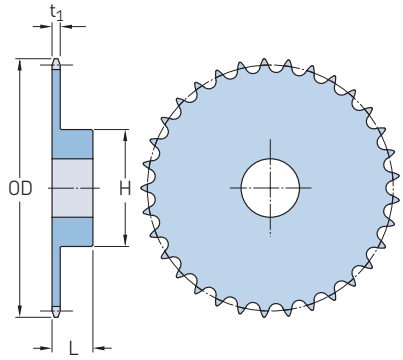

Type B

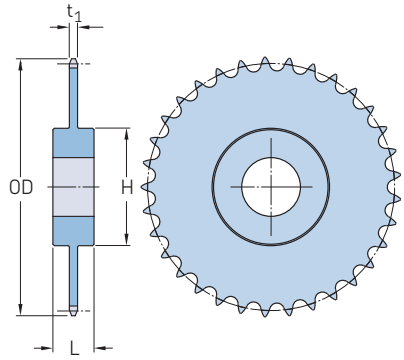

Type C

Pitch		Number of teeth	Outside diameter	Type	Dimensions Bore stock	Bore		Hub		Plate thickness	Mass	Designation
			OD			Min.	Max.	H	L	t_1		
mm	in.	–	mm	–	mm						kg	–
63,50	**2 1/2**	**40**	845,06	A	38,10	–	–	–	–	35,280	136,53	**PHS 200-1A40**
			845,06	C	–	38,10	152,40	228,60	127,00	35,280	145,15	**PHS 200-1C40**
		45	946,15	A	38,10	–	–	–	–	35,280	176,90	**PHS 200-1A45**
			946,15	C	–	38,10	152,40	228,60	127,00	35,280	165,11	**PHS 200-1C45**
		54	1128,27	A	38,10	–	–	–	–	35,280	251,74	**PHS 200-1A54**
			1128,27	C	–	38,10	165,10	241,30	139,70	35,280	232,24	**PHS 200-1C54**
		60	1249,68	A	38,10	–	–	–	–	35,280	313,89	**PHS 200-1A60**
			1249,68	C	–	38,10	165,10	241,30	139,70	35,280	296,65	**PHS 200-1C60**
76,20	**3**	**10**	280,16	A	38,10	–	–	–	–	44,150	13,61	**PHS 240-1A10**
			280,16	B	–	38,10	114,30	165,10	85,73	44,150	22,23	**PHS 240-1BH10**
		11	305,31	A	38,10	–	–	–	–	44,150	16,78	**PHS 240-1A11**
			305,31	B	–	38,10	120,65	177,80	98,43	44,150	29,94	**PHS 240-1BH11**
		12	330,20	A	38,10	–	–	–	–	44,150	20,41	**PHS 240-1A12**
			330,20	B	–	38,10	136,53	190,50	98,43	44,150	32,66	**PHS 240-1BH12**
		13	354,84	A	38,10	–	–	–	–	44,150	24,49	**PHS 240-1A13**
			354,84	B	–	38,10	136,53	190,50	98,43	44,150	36,74	**PHS 240-1BH13**
		14	379,48	A	38,10	–	–	–	–	44,150	28,12	**PHS 240-1A14**
			379,48	B	–	38,10	136,53	190,50	98,43	44,150	39,92	**PHS 240-1BH14**
		15	404,11	A	38,10	–	–	–	–	44,150	30,84	**PHS 240-1A15**
			404,11	B	–	38,10	136,53	190,50	98,43	44,150	44,45	**PHS 240-1BH15**
		16	428,75	A	38,10	–	–	–	–	44,150	37,19	**PHS 240-1A16**
			428,75	B	–	38,10	139,70	203,20	104,78	44,150	54,43	**PHS 240-1BH16**
		17	453,39	A	38,10	–	–	–	–	44,150	42,18	**PHS 240-1A17**
			453,39	B	–	38,10	139,70	203,20	104,78	44,150	62,14	**PHS 240-1BH17**
		18	477,77	A	38,10	–	–	–	–	44,150	48,99	**PHS 240-1A18**
			477,77	B	–	38,10	139,70	203,20	104,78	44,150	64,41	**PHS 240-1BH18**
		19	502,41	A	38,10	–	–	–	–	44,150	54,43	**PHS 240-1A19**
			502,41	B	–	38,10	139,70	203,20	104,78	44,150	69,85	**PHS 240-1BH19**
		20	526,80	A	38,10	–	–	–	–	44,150	58,06	**PHS 240-1A20**
			526,80	B	–	38,10	139,70	203,20	104,78	44,150	76,66	**PHS 240-1BH20**
		21	551,43	A	38,10	–	–	–	–	44,150	67,13	**PHS 240-1A21**
			551,43	B	–	38,10	139,70	203,20	104,78	44,150	84,37	**PHS 240-1BH21**
		25	648,97	A	38,10	–	–	–	–	44,150	94,35	**PHS 240-1A25**
			648,97	B	–	38,10	139,70	203,20	104,78	44,150	115,21	**PHS 240-1BH25**
		30	770,64	A	38,10	–	–	–	–	44,150	140,61	**PHS 240-1A30**
			770,64	C	–	38,10	152,40	228,60	158,75	44,150	180,53	**PHS 240-1C30**
		35	892,30	A	38,10	–	–	–	–	44,150	188,69	**PHS 240-1A35**
			892,30	C	–	38,10	152,40	228,60	158,75	44,150	239,04	**PHS 240-1C35**
		40	1013,97	A	38,10	–	–	–	–	44,150	248,57	**PHS 240-1A40**
			1013,97	C	–	38,10	177,80	254,00	171,45	44,150	304,81	**PHS 240-1C40**
		45	1135,38	A	38,10	–	–	–	–	44,150	318,42	**PHS 240-1A45**
			1135,38	C	–	38,10	177,80	254,00	171,45	44,150	385,55	**PHS 240-1C45**
		54	1354,07	A	38,10	–	–	–	–	44,150	463,57	**PHS 240-1A54**

Maximum bores can accommodate standard keyways. Larger bores are available where a shallow keyway is used or no keyway is required.
All Type B or C sprockets, up to and including 25 tooth, are with hardened teeth as standard.
For any additional size sprockets with hardened teeth, add "H" before the number of teeth, e.g. PHS 25-1BH9.

ANSI sprockets, simplex, pilot bore

ANSI 240-1 · 76,20 mm (3") pitch

Pitch		Number of teeth	Outside diameter	Type	Dimensions						Mass	Designation
					Bore stock	Bore		Hub		Plate thickness		
			OD			Min.	Max.	H	L	t_1		
mm	in.	–	mm	–	mm						kg	–
76,20	**3**	**54**	1354,07	C	–	38,10	177,80	254,00	171,45	44,150	520,72	**PHS 240-1C54**
		60	1499,62	A	38,10	–	–	–	–	44,150	575,15	**PHS 240-1A60**
			1499,62	C	–	38,10	177,80	254,00	171,45	44,150	643,65	**PHS 240-1C60**

Maximum bores can accommodate standard keyways. Larger bores are available where a shallow keyway is used or no keyway is required.
All Type B or C sprockets, up to and including 25 tooth, are with hardened teeth as standard.
For any additional size sprockets with hardened teeth, add "H" before the number of teeth, e.g. PHS 25-1BH9.

ANSI sprockets, simplex, taper bushed

ANSI 35-1 · 9,53 mm (3/8") pitch | ANSI 41-1 · 12,70 mm (1/2") pitch

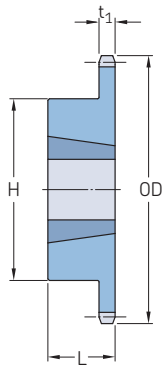

Type B

Pitch		Number of teeth	Diameters Outside OD	Pitch PD	Type	Bushing number	Dimensions Bore Min.	Max.	L	H	Plate thickness t_1	Mass Rim	Bushing	Designation
mm	in.	–	mm		–	–	mm					kg		–
9,53	3/8	**18**	59,69	54,86	B	1008	9,53	25,40	22,23	47,63	4,270	0,2	0,1	**PHS 35-1TBH18**
		19	62,74	57,91	B	1008	9,53	25,40	22,23	46,04	4,270	0,2	0,1	**PHS 35-1TBH19**
		20	65,79	60,96	B	1008	9,53	25,40	22,23	49,21	4,270	0,3	0,1	**PHS 35-1TBH20**
		21	68,83	64,01	B	1008	9,53	25,40	22,23	52,39	4,270	0,3	0,1	**PHS 35-1TBH21**
		22	73,15	66,80	B	1210	15,88	31,75	25,40	60,33	4,270	0,4	0,3	**PHS 35-1TBH22**
		23	74,93	69,85	B	1210	15,88	31,75	25,40	61,91	4,270	0,4	0,3	**PHS 35-1TBH23**
		24	77,98	72,90	B	1210	15,88	31,75	25,40	61,91	4,270	0,4	0,3	**PHS 35-1TBH24**
		25	81,03	75,95	B	1210	15,88	31,75	25,40	61,91	4,270	0,5	0,3	**PHS 35-1TBH25**
		26	84,07	78,99	B	1610	12,70	41,28	25,40	73,03	4,270	0,5	0,4	**PHS 35-1TB26**
		28	90,17	85,09	B	1610	12,70	41,28	25,40	73,03	4,270	0,5	0,4	**PHS 35-1TB28**
		30	96,27	91,19	B	1610	12,70	41,28	25,40	79,38	4,270	0,5	0,4	**PHS 35-1TB30**
		32	102,36	97,28	B	1610	12,70	41,28	25,40	82,55	4,270	0,6	0,4	**PHS 35-1TB32**
		35	111,51	106,17	B	1610	12,70	41,28	25,40	82,55	4,270	0,6	0,4	**PHS 35-1TB35**
		36	114,55	109,22	B	1610	12,70	41,28	25,40	82,55	4,270	0,6	0,4	**PHS 35-1TB36**
		40	126,75	121,67	B	1610	12,70	41,28	25,40	82,55	4,270	0,9	0,4	**PHS 35-1TB40**
		42	132,84	127,51	B	1610	12,70	41,28	25,40	82,55	4,270	0,9	0,4	**PHS 35-1TB42**
		45	141,99	136,65	B	1610	12,70	41,28	25,40	82,55	4,270	1,0	0,4	**PHS 35-1TB45**
		48	151,13	145,54	B	1610	12,70	41,28	25,40	82,55	4,270	1,0	0,4	**PHS 35-1TB48**
		54	169,16	163,83	B	1610	12,70	41,28	25,40	82,55	4,270	1,2	0,4	**PHS 35-1TB54**
		60	187,45	182,12	B	1610	12,70	41,28	25,40	82,55	4,270	1,4	0,4	**PHS 35-1TB60**
		70	217,68	212,34	B	1610	12,70	41,28	25,40	82,55	4,270	1,7	0,4	**PHS 35-1TB70**
		72	223,77	218,44	B	1610	12,70	41,28	25,40	82,55	4,270	1,8	0,4	**PHS 35-1TB72**
		80	248,16	242,57	B	1610	12,70	41,28	25,40	82,55	4,270	2,0	0,4	**PHS 35-1TB80**
		84	260,35	254,76	B	1610	12,70	41,28	25,40	82,55	4,270	2,2	0,4	**PHS 35-1TB84**
		96	296,67	291,08	B	1610	12,70	41,28	25,40	82,55	4,270	2,7	0,4	**PHS 35-1TB96**
		112	345,19	339,60	B	1610	12,70	41,28	25,40	82,55	4,270	3,5	0,4	**PHS 35-1TB112**
12,70	1/2	**14**	63,25	57,15	B	1008	9,53	25,40	22,23	47,63	5,770	0,2	0,1	**PHS 41-1TBH14**
		15	67,31	60,96	B	1008	9,53	25,40	22,23	47,63	5,770	0,2	0,1	**PHS 41-1TBH15**
		16	71,37	63,50	B	1008	9,53	25,40	22,23	50,80	5,770	0,3	0,1	**PHS 41-1TBH16**
		17	75,44	69,09	B	1210	15,88	31,75	25,40	60,33	5,770	0,3	0,3	**PHS 41-1TBH17**
		18	79,76	73,15	B	1210	15,88	31,75	25,40	85,73	5,770	0,4	0,3	**PHS 41-1TBH18**
		19	83,82	77,22	B	1210	15,88	31,75	25,40	63,50	5,770	0,5	0,3	**PHS 41-1TBH19**
		20	87,88	81,28	B	1610	12,70	41,28	25,40	73,03	5,770	0,5	0,4	**PHS 41-1TBH20**
		21	91,95	85,34	B	1610	12,70	41,28	25,40	76,20	5,770	0,5	0,4	**PHS 41-1TBH21**
		22	96,01	89,15	B	1610	12,70	41,28	25,40	76,20	5,770	0,6	0,4	**PHS 41-1TBH22**
		23	100,08	93,22	B	1610	12,70	41,28	25,40	76,20	5,770	0,6	0,4	**PHS 41-1TBH23**
		24	104,14	97,28	B	1610	12,70	41,28	25,40	76,20	5,770	0,6	0,4	**PHS 41-1TBH24**
		25	108,20	101,35	B	1610	12,70	41,28	25,40	76,20	5,770	0,7	0,4	**PHS 41-1TBH25**
		26	112,27	105,41	B	1610	12,70	41,28	25,40	76,20	5,770	0,7	0,4	**PHS 41-1TB26**
		28	120,40	113,54	B	1610	12,70	41,28	25,40	76,20	5,770	0,8	0,4	**PHS 41-1TB28**
		30	128,52	121,41	B	1610	12,70	41,28	25,40	76,20	5,770	0,8	0,4	**PHS 41-1TB30**
		32	136,65	129,54	B	1610	12,70	41,28	25,40	76,20	5,770	0,9	0,4	**PHS 41-1TB32**
		35	148,84	141,73	B	1610	12,70	41,28	25,40	76,20	5,770	1,0	0,4	**PHS 41-1TB35**
		36	152,91	145,80	B	1610	12,70	41,28	25,40	76,20	5,770	1,1	0,4	**PHS 41-1TB36**
		40	168,91	161,80	B	1610	12,70	41,28	25,40	76,20	5,770	1,2	0,4	**PHS 41-1TB40**
		45	189,23	182,12	B	1610	12,70	41,28	25,40	76,20	5,770	1,6	0,4	**PHS 41-1TB45**
		48	201,42	194,06	B	1610	12,70	41,28	25,40	76,20	5,770	1,9	0,4	**PHS 41-1TB48**
		54	225,55	218,44	B	1610	12,70	41,28	25,40	76,20	5,770	2,2	0,4	**PHS 41-1TB54**
		60	249,94	242,57	B	1610	12,70	41,28	25,40	76,20	5,770	2,6	0,4	**PHS 41-1TB60**
		70	290,32	282,96	B	1610	12,70	41,28	25,40	76,20	5,770	3,4	0,4	**PHS 41-1TB70**
		72	298,45	291,08	B	1610	12,70	41,28	25,40	76,20	5,770	3,7	0,4	**PHS 41-1TB72**
		80	330,96	323,60	B	1610	12,70	41,28	25,40	76,20	5,770	4,4	0,4	**PHS 41-1TB80**
		96	395,48	388,11	B	1610	12,70	41,28	25,40	76,20	5,770	5,9	0,4	**PHS 41-1TB96**

All Type B or C sprockets, up to and including 25 tooth, are with hardened teeth as standard.
For any additional size sprockets with hardened teeth, add "H" before the number of teeth, e.g. PHS 35-1TBH18.

ANSI sprockets, simplex, taper bushed

ANSI 40-1 · 12,70 mm (1/2") pitch | ANSI 50-1 · 15,88 mm (5/8") pitch | ANSI 60-1 · 19,05 mm (3/4") pitch

Pitch		Number of teeth	Diameters Outside OD	Pitch PD	Type	Bushing number	Dimensions Bore Min.	Max.	L	H	Plate thickness t_1	Mass Rim	Bushing	Designation
mm	in.	–	mm		–	–	mm					kg		–
12,70	1/2	**14**	63,25	57,15	B	1008	9,53	25,40	22,23	46,04	7,210	0,1	0,1	**PHS 40-1TBH14**
		15	67,31	60,96	B	1008	9,53	25,40	22,23	46,04	7,210	0,2	0,1	**PHS 40-1TBH15**
		16	71,37	65,02	B	1008	9,53	25,40	22,23	49,21	7,210	0,2	0,1	**PHS 40-1TBH16**
		17	75,69	69,09	B	1210	15,88	31,75	25,40	60,33	7,210	0,2	0,1	**PHS 40-1TBH17**
		18	79,50	73,15	B	1210	15,88	31,75	25,40	62,71	7,210	0,3	0,3	**PHS 40-1TBH18**
		19	83,82	77,22	B	1210	15,88	31,75	25,40	62,71	7,210	0,3	0,3	**PHS 40-1TBH19**
		20	87,88	81,28	B	1610	12,70	41,28	25,40	70,64	7,210	0,3	0,4	**PHS 40-1TBH20**
		21	91,95	85,34	B	1610	12,70	41,28	25,40	70,64	7,210	0,4	0,4	**PHS 40-1TBH21**
		22	96,01	89,15	B	1610	12,70	41,28	25,40	70,64	7,210	0,4	0,4	**PHS 40-1TBH22**
		23	100,08	93,22	B	1610	12,70	41,28	25,40	76,20	7,210	0,5	0,4	**PHS 40-1TBH23**
		24	104,14	97,28	B	1610	12,70	41,28	25,40	82,55	7,210	0,6	0,4	**PHS 40-1TBH24**
		25	108,20	101,35	B	1610	12,70	41,28	25,40	82,55	7,210	0,7	0,4	**PHS 40-1TBH25**
		26	112,27	105,41	B	1610	12,70	41,28	25,40	82,55	7,210	0,8	0,4	**PHS 40-1TB26**
		28	120,40	113,54	B	1610	12,70	41,28	25,40	76,20	7,210	0,8	0,4	**PHS 40-1TB28**
		30	128,52	121,41	B	1610	12,70	41,28	25,40	76,20	7,210	0,9	0,4	**PHS 40-1TB30**
		32	136,65	129,54	B	1610	12,70	41,28	25,40	76,20	7,210	0,9	0,4	**PHS 40-1TB32**
		35	148,84	141,73	B	1610	12,70	41,28	25,40	76,20	7,210	1,0	0,4	**PHS 40-1TB35**
		36	152,65	145,80	B	1610	12,70	41,28	25,40	76,20	7,210	1,1	0,4	**PHS 40-1TB36**
		40	168,91	161,80	B	1610	12,70	41,28	25,40	76,20	7,210	1,3	0,4	**PHS 40-1TB40**
		42	177,04	169,93	B	1610	12,70	41,28	25,40	76,20	7,210	1,3	0,4	**PHS 40-1TB42**
		45	189,23	182,12	B	1610	12,70	41,28	25,40	76,20	7,210	1,6	0,4	**PHS 40-1TB45**
		48	201,42	194,06	B	1610	12,70	41,28	25,40	76,20	7,210	1,8	0,4	**PHS 40-1TB48**
		54	225,55	218,44	B	1610	12,70	41,28	25,40	76,20	7,210	2,2	0,4	**PHS 40-1TB54**
		60	249,94	242,57	B	1610	12,70	41,28	25,40	76,20	7,210	2,7	0,4	**PHS 40-1TB60**
		70	290,32	282,96	B	2012	19,05	50,80	31,75	90,49	7,210	3,7	0,8	**PHS 40-1TB70**
		72	298,45	291,08	B	2012	19,05	50,80	31,75	90,49	7,210	4,1	0,8	**PHS 40-1TB72**
		80	330,96	323,60	B	2012	19,05	50,80	31,75	90,49	7,210	4,9	0,8	**PHS 40-1TB80**
		84	346,96	339,60	B	2012	19,05	50,80	31,75	90,49	7,210	5,1	0,8	**PHS 40-1TB84**
		96	395,48	388,11	B	2012	19,05	50,80	31,75	90,49	7,210	6,6	0,8	**PHS 40-1TB96**
		112	460,25	452,88	B	2517	19,05	63,50	44,45	107,95	7,210	9,3	0,8	**PHS 40-1TB112**
15,88	5/8	**12**	68,83	61,47	B	1008	9,53	25,40	22,23	49,21	8,710	0,2	0,1	**PHS 50-1TBH12**
		13	73,91	66,29	B	1008	9,53	25,40	22,23	46,04	8,710	0,2	0,1	**PHS 50-1TBH13**
		14	78,99	71,37	B	1008	9,53	25,40	22,23	49,21	8,710	0,3	0,1	**PHS 50-1TBH14**
		15	84,07	76,45	B	1210	15,88	31,75	25,40	62,71	8,710	0,3	0,3	**PHS 50-1TBH15**
		16	89,41	81,28	B	1610	12,70	41,28	25,40	70,64	8,710	0,3	0,4	**PHS 50-1TBH16**
		17	94,49	86,36	B	1610	12,70	41,28	25,40	70,64	8,710	0,4	0,4	**PHS 50-1TBH17**
		18	99,57	91,44	B	1610	12,70	41,28	25,40	70,64	8,710	0,4	0,4	**PHS 50-1TBH18**
		19	104,65	96,52	B	1610	12,70	41,28	25,40	76,20	8,710	0,6	0,4	**PHS 50-1TBH19**
		20	109,73	101,60	B	1610	12,70	41,28	25,40	82,55	8,710	0,7	0,4	**PHS 50-1TBH20**
		21	114,81	106,43	B	1610	12,70	41,28	25,40	76,20	8,710	0,7	0,4	**PHS 50-1TBH21**
		22	119,89	111,51	B	1610	12,70	41,28	25,40	76,20	8,710	0,7	0,4	**PHS 50-1TBH22**
		23	124,97	116,59	B	2012	19,05	50,80	31,75	90,49	8,710	0,9	0,8	**PHS 50-1TBH23**
		24	130,05	121,67	B	2012	19,05	50,80	31,75	90,49	8,710	1,0	0,8	**PHS 50-1TBH24**
		25	135,13	126,75	B	2012	19,05	50,80	31,75	90,49	8,710	1,1	0,8	**PHS 50-1TBH25**
		26	140,21	131,57	B	2012	19,05	50,80	31,75	90,49	8,710	1,1	0,8	**PHS 50-1TB26**
		27	145,29	136,65	B	2012	19,05	50,80	31,75	90,49	8,710	1,2	0,8	**PHS 50-1TB27**
		28	150,37	141,73	B	2012	19,05	50,80	31,75	90,49	8,710	1,3	0,8	**PHS 50-1TB28**
		30	160,53	151,89	B	2012	19,05	50,80	31,75	90,49	8,710	1,5	0,8	**PHS 50-1TB30**
		32	170,69	162,05	B	2012	19,05	50,80	31,75	90,49	8,710	1,6	0,8	**PHS 50-1TB32**
		35	185,93	177,04	B	2012	19,05	50,80	31,75	90,49	8,710	1,9	0,8	**PHS 50-1TB35**
		36	191,01	182,12	B	2012	19,05	50,80	31,75	90,49	8,710	2,0	0,8	**PHS 50-1TB36**
		40	211,33	202,44	B	2012	19,05	50,80	31,75	90,49	8,710	2,4	0,8	**PHS 50-1TB40**
		42	221,23	212,34	B	2012	19,05	50,80	31,75	90,49	8,710	2,7	0,8	**PHS 50-1TB42**
		45	236,47	227,58	B	2012	19,05	50,80	31,75	90,49	8,710	3,0	0,8	**PHS 50-1TB45**
		48	251,71	242,82	B	2012	19,05	50,80	31,75	90,49	8,710	3,3	0,8	**PHS 50-1TB48**
		54	282,19	273,05	B	2012	19,05	50,80	31,75	90,49	8,710	4,1	0,8	**PHS 50-1TB54**
		60	312,42	303,28	B	2012	19,05	50,80	31,75	90,49	8,710	4,9	0,8	**PHS 50-1TB60**
		70	362,97	353,82	B	2517	19,05	63,50	44,45	82,55	8,710	6,4	1,6	**PHS 50-1TB70**
		72	373,13	363,98	B	2517	19,05	63,50	44,45	82,55	8,710	7,0	1,6	**PHS 50-1TB72**
		80	413,51	404,37	B	2517	19,05	63,50	44,45	82,55	8,710	8,9	1,6	**PHS 50-1TB80**
		84	433,83	424,43	B	2517	19,05	63,50	44,45	82,55	8,710	10,2	1,6	**PHS 50-1TB84**
		96	494,54	485,14	B	2517	19,05	63,50	44,45	82,55	8,710	13,2	1,6	**PHS 50-1TB96**
		112	575,31	566,17	B	2517	19,05	63,50	44,45	82,55	8,710	17,6	1,6	**PHS 50-1TB112**
19,05	3/4	**11**	76,20	67,56	B	1008	9,53	25,40	22,23	46,04	11,660	0,3	0,1	**PHS 60-1TBH11**
		12	82,55	73,66	B	1008	9,53	25,40	22,23	49,21	11,660	0,4	0,1	**PHS 60-1TBH12**
		13	88,65	79,50	B	1210	15,88	31,75	25,40	62,71	11,660	0,4	0,3	**PHS 60-1TBH13**
		14	95,00	85,60	B	1210	15,88	31,75	25,40	62,71	11,660	0,5	0,3	**PHS 60-1TBH14**
		15	101,09	91,69	B	1610	12,70	41,28	25,40	70,64	11,660	0,5	0,4	**PHS 60-1TBH15**
		16	107,19	97,54	B	1610	12,70	41,28	25,40	76,20	11,660	0,6	0,4	**PHS 60-1TBH16**
		17	113,28	103,63	B	1610	12,70	41,28	25,40	82,55	11,660	0,8	0,4	**PHS 60-1TBH17**
		18	119,38	109,73	B	1610	12,70	41,28	25,40	82,55	11,660	0,9	0,4	**PHS 60-1TBH18**
		19	125,73	115,82	B	1610	12,70	41,28	25,40	82,55	11,660	1,0	0,4	**PHS 60-1TBH19**
		20	131,57	121,67	B	2012	19,05	50,80	31,75	90,49	11,660	1,0	0,8	**PHS 60-1TBH20**

All Type B or C sprockets, up to and including 25 tooth, are with hardened teeth as standard.
For any additional size sprockets with hardened teeth, add "H" before the number of teeth, e.g. PHS 35-1TBH18.

ANSI sprockets, simplex, taper bushed

ANSI 60-1 · 19,05 mm (3/4") pitch | ANSI 80-1 · 25,40 mm (1") pitch | ANSI 100-1 · 31,75 mm (1 1/4") pitch

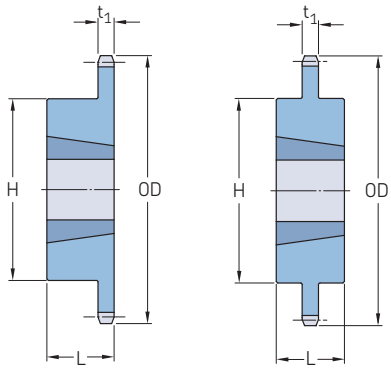

Type B Type C

Pitch		Number of teeth	Diameters Outside OD	Pitch PD	Type	Bushing number	Dimensions Bore Min.	Max.	L	H	Plate thickness t_1	Mass Rim	Bushing	Designation
mm	in.	–	mm		–	–	mm					kg		–
19,05	3/4	**21**	137,92	127,76	B	2012	19,05	50,80	31,75	90,49	11,660	1,1	0,8	**PHS 60-1TBH21**
		22	144,02	133,86	B	2012	19,05	50,80	31,75	90,49	11,660	1,3	0,8	**PHS 60-1TBH22**
		23	150,11	139,95	B	2012	19,05	50,80	31,75	90,49	11,660	1,4	0,8	**PHS 60-1TBH23**
		24	156,21	146,05	B	2012	19,05	50,80	31,75	90,49	11,660	1,5	0,8	**PHS 60-1TBH24**
		25	162,31	151,89	B	2012	19,05	50,80	31,75	90,49	11,660	1,7	0,8	**PHS 60-1TBH25**
		26	168,40	157,99	B	2012	19,05	50,80	31,75	90,49	11,660	1,8	0,8	**PHS 60-1TB26**
		27	174,50	163,07	B	2012	19,05	50,80	31,75	90,49	11,660	1,9	0,8	**PHS 60-1TB27**
		28	180,59	170,18	B	2012	19,05	50,80	31,75	90,49	11,660	2,1	0,8	**PHS 60-1TB28**
		30	192,79	182,12	B	2012	19,05	50,80	31,75	90,49	11,660	2,4	0,8	**PHS 60-1TB30**
		32	204,72	194,31	B	2012	19,05	50,80	31,75	90,49	11,660	2,5	0,8	**PHS 60-1TB32**
		35	223,01	212,60	B	2012	19,05	50,80	31,75	90,49	11,660	2,9	0,8	**PHS 60-1TB35**
		36	229,11	218,69	B	2012	19,05	50,80	31,75	90,49	11,660	3,0	0,8	**PHS 60-1TB36**
		40	253,49	242,82	B	2012	19,05	50,80	31,75	90,49	11,660	3,8	0,8	**PHS 60-1TB40**
		42	265,68	255,02	B	2012	19,05	50,80	31,75	90,49	11,660	4,5	0,8	**PHS 60-1TB42**
		45	283,97	273,05	B	2012	19,05	50,80	31,75	90,49	11,660	5,2	0,8	**PHS 60-1TB45**
		48	302,01	291,34	B	2012	19,05	50,80	31,75	90,49	11,660	6,0	0,8	**PHS 60-1TB48**
		54	338,58	327,66	B	2517	19,05	63,50	44,45	107,95	11,660	7,8	1,6	**PHS 60-1TB54**
		60	374,90	363,98	B	2517	19,05	63,50	44,45	107,95	11,660	9,5	1,6	**PHS 60-1TB60**
		70	435,61	424,69	B	2517	19,05	63,50	44,45	107,95	11,660	12,5	1,6	**PHS 60-1TB70**
		72	447,80	436,63	B	2517	19,05	63,50	44,45	107,95	11,660	13,6	1,6	**PHS 60-1TB72**
		80	496,32	485,14	B	2517	19,05	63,50	44,45	107,95	11,660	16,5	1,6	**PHS 60-1TB80**
		84	520,45	509,52	B	2517	19,05	63,50	44,45	107,95	11,660	18,4	1,6	**PHS 60-1TB84**
25,40	**1**	**10**	93,47	82,30	B	1215	15,88	31,75	38,10	60,33	14,600	0,5	0,4	**PHS 80-1TBH10**
		11	101,85	90,17	B	1215	15,88	31,75	38,10	62,71	14,600	0,7	0,4	**PHS 80-1TBH11**
		12	109,98	98,04	B	1615	12,70	41,28	38,10	76,20	14,600	0,8	0,5	**PHS 80-1TBH12**
		13	118,36	106,17	B	1615	12,70	41,28	38,10	76,20	14,600	1,0	0,5	**PHS 80-1TBH13**
		14	126,49	114,05	B	1615	12,70	41,28	38,10	82,55	14,600	1,1	0,5	**PHS 80-1TBH14**
		15	134,62	122,17	B	1615	12,70	41,28	38,10	82,55	14,600	1,2	0,5	**PHS 80-1TBH15**
		16	143,00	130,30	B	2012	19,05	50,80	31,75	90,49	14,600	1,3	0,8	**PHS 80-1TBH16**
		17	151,13	138,18	B	2012	19,05	50,80	31,75	90,49	14,600	1,4	0,8	**PHS 80-1TBH17**
		18	159,26	146,30	B	2012	19,05	50,80	31,75	90,49	14,600	1,2	0,8	**PHS 80-1TBH18**
		19	167,39	154,43	B	2012	19,05	50,80	31,75	90,49	14,600	1,9	0,8	**PHS 80-1TBH19**
		20	175,51	162,31	B	2517	19,05	63,50	44,45	107,95	14,600	2,5	0,8	**PHS 80-1TBH20**
		21	183,90	170,43	B	2517	19,05	63,50	44,45	107,95	14,600	2,7	1,6	**PHS 80-1TBH21**
		22	191,77	178,56	B	2517	19,05	63,50	44,45	107,95	14,600	3,0	1,6	**PHS 80-1TBH22**
		23	200,15	186,44	B	2517	19,05	63,50	44,45	107,95	14,600	3,2	1,6	**PHS 80-1TBH23**
		24	208,28	194,56	B	2517	19,05	63,50	44,45	107,95	14,600	3,4	1,6	**PHS 80-1TBH24**
		25	216,41	202,69	B	2517	19,05	63,50	44,45	107,95	14,600	3,7	1,6	**PHS 80-1TBH25**
		26	224,54	210,82	B	2517	19,05	63,50	44,45	107,95	14,600	4,0	1,6	**PHS 80-1TB26**
		27	232,66	218,69	B	2517	19,05	63,50	44,45	107,95	14,600	4,1	1,6	**PHS 80-1TB27**
		28	240,54	226,82	B	2517	19,05	63,50	44,45	107,95	14,600	4,3	1,6	**PHS 80-1TB28**
		30	256,79	243,08	B	2517	19,05	63,50	44,45	107,95	14,600	5,2	1,6	**PHS 80-1TB30**
		32	273,05	259,08	B	2517	19,05	63,50	44,45	107,95	14,600	5,4	1,6	**PHS 80-1TB32**
		35	297,43	283,46	B	2517	19,05	63,50	44,45	107,95	14,600	6,9	1,6	**PHS 80-1TB35**
		36	305,56	291,34	B	2517	19,05	63,50	44,45	107,95	14,600	7,7	1,6	**PHS 80-1TB36**
		40	338,07	323,85	B	2517	19,05	63,50	44,45	107,95	14,600	9,5	1,6	**PHS 80-1TB40**
		45	378,46	364,24	B	2517	19,05	63,50	44,45	107,95	14,600	12,0	1,6	**PHS 80-1TB45**
		48	402,84	388,37	B	2517	19,05	63,50	44,45	107,95	14,600	13,4	1,6	**PHS 80-1TB48**
		54	451,36	436,88	B	2517	19,05	63,50	44,45	107,95	14,600	17,5	1,6	**PHS 80-1TB54**
		60	499,87	485,39	B	2517	19,05	63,50	44,45	107,95	14,600	20,4	1,6	**PHS 80-1TB60**
		70	580,90	566,17	B	3020	31,75	76,20	50,80	133,35	14,600	23,7	3,0	**PHS 80-1TB70**
		80	661,67	646,94	B	3020	31,75	76,20	50,80	133,35	14,600	31,4	3,0	**PHS 80-1TB80**
31,75	**1 1/4**	**11**	127,25	112,78	B	1615	12,70	41,28	38,10	76,20	17,580	1,2	0,5	**PHS 100-1TBH11**

All Type B or C sprockets, up to and including 25 tooth, are with hardened teeth as standard.
For any additional size sprockets with hardened teeth, add "H" before the number of teeth, e.g. PHS 35-1TBH18.

ANSI sprockets, simplex, taper bushed

ANSI 100-1 · 31,75 mm (1 1/4") pitch | ANSI 120-1 · 38,10 mm (1 1/2") pitch | ANSI 140-1 · 44,45 mm (1 3/4") pitch | ANSI 160-1 · 50,80 mm (2") pitch

Pitch		Number of teeth	Diameters Outside OD	Pitch PD	Type	Bushing number	Dimensions Bore Min.	Max.	L	H	Plate thickness t_1	Mass Rim	Bushing	Designation
mm	in.	–	mm		–	–	mm					kg		–
31,75	**1 1/4**	**12**	137,67	122,68	B	1615	12,70	41,28	38,10	82,55	17,580	1,6	0,5	**PHS 100-1TBH12**
		13	147,83	132,59	B	2012	19,05	50,80	31,75	90,49	17,580	1,6	0,8	**PHS 100-1TBH13**
		14	158,24	142,75	B	2012	19,05	50,80	31,75	90,49	17,580	1,8	0,8	**PHS 100-1TBH14**
		15	168,40	152,65	B	2517	19,05	63,50	44,45	107,95	17,580	2,3	1,6	**PHS 100-1TBH15**
		16	178,56	162,81	B	2517	19,05	63,50	44,45	114,30	17,580	2,9	1,6	**PHS 100-1TBH16**
		17	188,98	172,72	B	2517	19,05	63,50	44,45	114,30	17,580	3,2	1,6	**PHS 100-1TBH17**
		18	199,14	182,88	B	2517	19,05	63,50	44,45	114,30	17,580	3,5	1,6	**PHS 100-1TBH18**
		19	209,30	192,79	B	2517	19,05	63,50	44,45	114,30	17,580	4,0	1,6	**PHS 100-1TBH19**
		20	219,46	202,95	B	2517	19,05	63,50	44,45	114,30	17,580	4,4	1,6	**PHS 100-1TBH20**
		21	229,62	213,11	B	2517	19,05	63,50	44,45	114,30	17,580	4,8	1,6	**PHS 100-1TBH21**
		22	239,78	223,01	B	2517	19,05	63,50	44,45	114,30	17,580	5,0	1,6	**PHS 100-1TBH22**
		24	260,10	243,33	B	2517	19,05	63,50	44,45	114,30	17,580	5,9	1,6	**PHS 100-1TBH24**
		26	280,42	263,40	B	2517	19,05	63,50	44,45	114,30	17,580	6,8	1,6	**PHS 100-1TB26**
		28	300,74	283,46	B	3020	31,75	76,20	50,80	133,35	17,580	7,5	3,0	**PHS 100-1TB28**
		30	321,06	303,78	B	3020	31,75	76,20	50,80	133,35	17,580	10,0	3,0	**PHS 100-1TB30**
		32	341,38	323,85	B	3020	31,75	76,20	50,80	133,35	17,580	10,4	3,0	**PHS 100-1TB32**
		35	371,86	354,33	B	3020	31,75	76,20	50,80	133,35	17,580	12,7	3,0	**PHS 100-1TB35**
		36	382,02	364,24	B	3020	31,75	76,20	50,80	133,35	17,580	14,1	3,0	**PHS 100-1TB36**
		40	422,40	404,62	B	3020	31,75	76,20	50,80	133,35	17,580	16,8	3,0	**PHS 100-1TB40**
		45	473,20	455,17	B	3020	31,75	76,20	50,80	133,35	17,580	20,9	3,0	**PHS 100-1TB45**
		48	503,43	485,39	B	3020	31,75	76,20	50,80	133,35	17,580	24,0	3,0	**PHS 100-1TB48**
		54	564,13	546,10	B	3020	31,75	76,20	50,80	133,35	17,580	28,1	3,0	**PHS 100-1TB54**
		60	624,84	606,55	B	3020	31,75	76,20	50,80	133,35	17,580	32,7	3,0	**PHS 100-1TB60**
38,10	**1 1/2**	**12**	165,10	147,32	B	2012	19,05	50,80	31,75	90,49	23,470	2,5	0,8	**PHS 120-1TBH12**
		13	175,26	159,26	B	2517	19,05	63,50	44,45	107,95	23,470	2,7	1,6	**PHS 120-1TBH13**
		14	189,74	171,20	B	2517	19,05	63,50	44,45	107,95	23,470	3,2	1,6	**PHS 120-1TBH14**
		15	202,18	183,13	B	2517	19,05	63,50	44,45	107,95	23,470	3,6	1,6	**PHS 120-1TBH15**
		16	214,38	195,33	B	3020	31,75	76,20	50,80	133,35	23,470	4,5	3,0	**PHS 120-1TBH16**
		17	226,57	207,26	B	3020	31,75	76,20	50,80	133,35	23,470	5,0	3,0	**PHS 120-1TBH17**
		18	239,01	219,46	B	3020	31,75	76,20	50,80	133,35	23,470	5,4	3,0	**PHS 120-1TBH18**
		19	251,21	231,39	B	3020	31,75	76,20	50,80	133,35	23,470	6,4	3,0	**PHS 120-1TBH19**
		20	263,40	243,59	B	3020	31,75	76,20	50,80	133,35	23,470	7,0	3,0	**PHS 120-1TBH20**
		21	275,59	255,52	B	3020	31,75	76,20	50,80	133,35	23,470	7,9	3,0	**PHS 120-1TBH21**
		24	312,17	291,85	B	3020	31,75	76,20	50,80	133,35	23,470	10,7	3,0	**PHS 120-1TBH24**
		26	336,55	315,98	B	3020	31,75	76,20	50,80	133,35	23,470	12,9	3,0	**PHS 120-1TB26**
		30	385,32	364,49	B	3020	31,75	76,20	50,80	133,35	23,470	15,2	3,0	**PHS 120-1TB30**
		35	446,28	424,94	C	3020	31,75	76,20	50,80	133,35	23,470	23,6	3,0	**PHS 120-1TB35**
		45	567,69	546,10	C	3030	31,75	76,20	76,20	149,23	23,470	37,2	4,2	**PHS 120-1TB45**
		60	749,81	727,96	C	3535	38,10	88,90	88,90	165,10	23,470	63,5	6,4	**PHS 120-1TB60**
		70	871,22	849,12	C	3535	38,10	88,90	88,90	165,10	23,470	79,4	6,4	**PHS 120-1TB70**
		80	992,63	970,53	C	3535	38,10	82,55	88,90	165,10	23,470	99,8	6,4	**PHS 120-1TB80**
44,45	**1 3/4**	**12**	192,53	171,70	B	2517	19,05	63,50	44,45	107,95	23,470	3,2	1,6	**PHS 140-1TBH12**
		13	207,01	185,67	B	3020	31,75	76,20	50,80	133,35	23,470	3,6	3,0	**PHS 140-1TBH13**
		14	221,49	199,64	B	3020	31,75	76,20	50,80	133,35	23,470	4,5	3,0	**PHS 140-1TBH14**
		15	235,71	213,87	B	3020	31,75	76,20	50,80	133,35	23,470	5,4	3,0	**PHS 140-1TBH15**
		16	250,19	227,84	B	3020	31,75	76,20	50,80	133,35	23,470	6,4	3,0	**PHS 140-1TBH16**
		17	264,41	241,81	B	3020	31,75	76,20	50,80	133,35	23,470	7,3	3,0	**PHS 140-1TBH17**
		18	278,64	256,03	B	3020	31,75	76,20	50,80	133,35	23,470	8,2	3,0	**PHS 140-1TBH18**
		19	293,12	270,00	B	3020	31,75	76,20	50,80	133,35	23,470	9,1	3,0	**PHS 140-1TBH19**
		21	321,56	298,20	B	3020	31,75	76,20	50,80	133,35	23,470	10,9	3,0	**PHS 140-1TBH21**
		26	392,68	368,81	B	3020	31,75	76,20	50,80	133,35	23,470	18,1	3,0	**PHS 140-1TB26**
		35	520,45	495,81	C	3535	38,10	88,90	88,90	165,10	23,470	35,4	6,4	**PHS 140-1TB35**
		45	662,43	637,29	C	4040	44,45	101,60	101,60	196,85	23,470	53,5	10,0	**PHS 140-1TB45**
		60	874,78	849,38	C	4040	44,45	101,60	101,60	196,85	23,470	85,3	10,0	**PHS 140-1TB60**
		70	1016,51	990,85	C	4040	44,45	101,60	101,60	196,85	23,470	109,3	10,0	**PHS 140-1TB70**
50,80	**2**	**11**	203,45	180,34	B	2517	19,05	63,50	44,45	107,95	29,360	4,1	1,6	**PHS 160-1TBH11**
		12	219,96	196,34	B	3020	31,75	76,20	50,80	133,35	29,360	5,0	3,0	**PHS 160-1TBH12**
		13	236,47	212,34	B	3020	31,75	76,20	50,80	133,35	29,360	5,9	3,0	**PHS 160-1TBH13**
		14	252,98	228,35	B	3020	31,75	76,20	50,80	133,35	29,360	7,3	3,0	**PHS 160-1TBH14**
		15	269,49	244,35	B	3535	38,10	88,90	88,90	165,10	29,360	11,3	6,4	**PHS 160-1TBH15**
		16	286,00	260,35	B	3535	38,10	88,90	88,90	165,10	29,360	12,7	6,4	**PHS 160-1TBH16**
		17	302,26	276,35	B	3535	38,10	88,90	88,90	165,10	29,360	14,5	6,4	**PHS 160-1TBH17**
		18	318,52	292,61	B	3535	38,10	88,90	88,90	165,10	29,360	15,9	6,4	**PHS 160-1TBH18**
		19	335,03	308,61	B	3535	38,10	88,90	88,90	165,10	29,360	17,7	6,4	**PHS 160-1TBH19**
		21	367,54	340,87	B	3535	38,10	88,90	88,90	165,10	29,360	21,8	6,4	**PHS 160-1TBH21**
		26	448,82	421,39	B	3535	38,10	88,90	88,90	165,10	29,360	30,8	6,4	**PHS 160-1TB26**
		35	594,87	566,67	C	4040	44,45	101,60	101,60	196,85	29,360	53,5	6,4	**PHS 160-1TB35**
		45	756,92	728,22	C	4040	44,45	101,60	101,60	196,85	29,360	84,4	10,0	**PHS 160-1TB45**
		60	999,74	970,79	C	4545	53,98	114,30	114,30	196,85	29,360	132,5	13,6	**PHS 160-1TB60**

All Type B or C sprockets, up to and including 25 tooth, are with hardened teeth as standard.
For any additional size sprockets with hardened teeth, add "H" before the number of teeth, e.g. PHS 35-1TBH18.

ANSI sprockets, double simplex, pilot bore

ANSI 40-1 · 12,70 mm (1/2") pitch | ANSI 50-1 · 15,88 mm (5/8") pitch | ANSI 60-1 · 19,05 mm (3/4") pitch | ANSI 80-1 · 25,40 mm (1") pitch | ANSI 100-1 · 31,75 mm (1 1/4") pitch

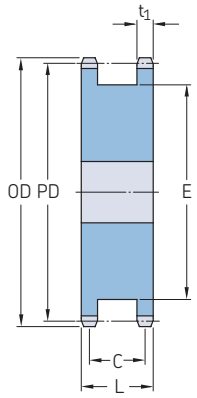

Type A

Pitch Pitch		Number of teeth	Diameters Outside OD	Pitch PD	Type	Dimensions Bore Min.	Max.	L	C	E	Plate thickness t_1	Mass	Designation
mm	in.	–	mm		–	mm						kg	–
12,70	1/2	**15**	67,31	60,96	A	12,70	31,75	35,72	28,58	46,04	7,210	0,5	**PHS 40-1DSA15**
		16	71,37	65,02	A	12,70	31,75	35,72	28,58	50,80	7,210	0,6	**PHS 40-1DSA16**
		17	75,69	69,09	A	12,70	33,34	35,72	28,58	53,98	7,210	0,7	**PHS 40-1DSA17**
		18	79,76	73,15	A	12,70	38,10	35,72	28,58	58,74	7,210	0,8	**PHS 40-1DSA18**
		19	83,82	77,22	A	15,88	42,86	35,72	28,58	63,50	7,210	1,0	**PHS 40-1DSA19**
		20	87,88	81,28	A	15,88	44,45	35,72	28,58	66,68	7,210	1,2	**PHS 40-1DSA20**
		21	91,95	85,34	A	15,88	44,45	35,72	28,58	70,64	7,210	1,3	**PHS 40-1DSA21**
		22	96,01	89,15	A	15,88	46,04	35,72	28,58	74,61	7,210	1,4	**PHS 40-1DSA22**
		23	100,08	93,22	A	15,88	52,39	35,72	28,58	53,18	7,210	1,6	**PHS 40-1DSA23**
		24	104,14	97,28	A	15,88	57,15	35,72	28,58	57,55	7,210	1,8	**PHS 40-1DSA24**
		25	108,20	101,35	A	15,88	57,15	35,72	28,58	61,91	7,210	2,0	**PHS 40-1DSA25**
15,88	5/8	**15**	84,33	76,45	A	15,88	38,10	42,07	30,16	60,33	8,710	1,0	**PHS 50-1DSA15**
		16	89,41	81,28	A	15,88	42,86	42,07	33,34	63,50	8,710	1,1	**PHS 50-1DSA16**
		17	94,49	86,36	A	15,88	44,45	42,07	33,34	68,26	8,710	1,3	**PHS 50-1DSA17**
		18	99,57	91,44	A	15,88	47,63	42,07	33,34	73,42	8,710	1,5	**PHS 50-1DSA18**
		19	104,65	96,52	A	15,88	52,39	42,07	33,34	78,18	8,710	1,7	**PHS 50-1DSA19**
		20	109,73	101,60	A	15,88	57,15	42,07	33,34	83,34	8,710	1,9	**PHS 50-1DSA20**
		21	114,81	106,43	A	15,88	57,15	42,07	33,34	88,50	8,710	2,2	**PHS 50-1DSA21**
		22	119,89	111,51	A	15,88	61,91	42,07	33,34	93,66	8,710	2,4	**PHS 50-1DSA22**
		23	124,97	116,59	A	15,88	66,68	42,07	33,34	98,82	8,710	2,6	**PHS 50-1DSA23**
		24	130,05	121,67	A	15,88	69,85	42,07	33,34	103,58	8,710	2,9	**PHS 50-1DSA24**
19,05	3/4	**13**	88,65	79,50	A	19,05	31,75	49,21	37,70	59,53	11,660	1,2	**PHS 60-1DSA13**
		14	95,00	85,60	A	19,05	33,34	49,21	37,70	65,09	11,660	1,5	**PHS 60-1DSA14**
		15	101,09	91,69	A	19,05	38,10	49,21	37,70	73,03	11,660	1,7	**PHS 60-1DSA15**
		16	107,19	97,54	A	19,05	42,86	49,21	37,70	77,39	11,660	2,0	**PHS 60-1DSA16**
		17	113,28	103,63	A	19,05	44,45	49,21	37,70	82,55	11,660	2,4	**PHS 60-1DSA17**
		18	119,38	109,73	A	19,05	47,63	49,21	37,70	88,90	11,660	3,0	**PHS 60-1DSA18**
		19	125,73	115,82	A	19,05	52,39	49,21	37,70	94,06	11,660	3,1	**PHS 60-1DSA19**
		20	131,83	121,67	A	19,05	57,15	49,21	37,70	100,41	11,660	3,2	**PHS 60-1DSA20**
		21	137,92	127,76	A	19,05	69,85	49,21	37,70	106,36	11,660	3,4	**PHS 60-1DSA21**
		22	144,02	133,86	A	19,05	69,85	49,21	37,70	112,71	11,660	5,0	**PHS 60-1DSA22**
		23	150,11	139,95	A	19,05	69,85	49,21	37,70	118,27	11,660	5,2	**PHS 60-1DSA23**
		24	156,21	146,05	A	19,05	69,85	49,21	37,70	131,76	11,660	5,4	**PHS 60-1DSA24**
25,40	**1**	**13**	118,36	106,17	A	25,40	50,80	55,56	41,28	76,60	14,600	3,0	**PHS 80-1DSA13**
		14	126,49	114,05	A	25,40	57,15	55,56	41,28	84,93	14,600	3,5	**PHS 80-1DSA14**
		15	134,62	122,17	A	25,40	60,33	55,56	41,28	96,84	14,600	4,1	**PHS 80-1DSA15**
		16	143,00	130,30	A	25,40	68,26	55,56	41,28	101,60	14,600	4,3	**PHS 80-1DSA16**
		17	151,13	138,18	A	25,40	71,44	55,56	41,28	109,54	14,600	4,9	**PHS 80-1DSA17**
		18	159,26	146,30	A	25,40	79,38	55,56	41,28	117,87	14,600	5,5	**PHS 80-1DSA18**
		19	167,39	154,43	A	25,40	82,55	55,56	41,28	125,81	14,600	5,8	**PHS 80-1DSA19**
		20	175,51	162,31	A	25,40	88,90	55,56	41,28	134,14	14,600	6,4	**PHS 80-1DSA20**
		21	183,90	170,43	A	25,40	95,25	55,56	41,28	142,08	14,600	7,5	**PHS 80-1DSA21**
		22	192,02	178,56	A	25,40	98,43	55,56	41,28	150,42	14,600	8,4	**PHS 80-1DSA22**
		23	200,15	186,44	A	25,40	98,43	55,56	41,28	158,35	14,600	9,3	**PHS 80-1DSA23**
31,75	**1 1/4**	**13**	147,83	132,59	A	25,40	63,50	68,26	50,80	96,04	17,580	5,1	**PHS 100-1DSA13**
		14	158,24	142,75	A	31,75	69,85	68,26	50,80	106,36	17,580	6,1	**PHS 100-1DSA14**
		15	168,40	152,65	A	31,75	77,79	68,26	50,80	116,68	17,580	7,6	**PHS 100-1DSA15**
		16	178,56	162,81	A	31,75	82,55	68,26	50,80	127,00	17,580	8,8	**PHS 100-1DSA16**
		17	188,98	172,72	A	31,75	92,08	68,26	50,80	137,32	17,580	9,8	**PHS 100-1DSA17**
		18	199,14	182,88	A	31,75	95,25	68,26	50,80	147,24	17,580	10,4	**PHS 100-1DSA18**
		19	209,30	192,79	A	31,75	106,36	68,26	50,80	157,56	17,580	11,3	**PHS 100-1DSA19**
		20	219,46	202,95	A	31,75	106,36	68,26	50,80	167,88	17,580	12,0	**PHS 100-1DSA20**

All Type B or C sprockets, up to and including 25 tooth, are with hardened teeth as standard.
For any additional size sprockets with hardened teeth, add "H" before the number of teeth, e.g. PHS 40-1DSAH15.

ANSI sprockets, double simplex, pilot bore

ANSI 100-1 · 31,75 mm (1 1/4") pitch | ANSI 120-1 · 38,10 mm (1 1/2") pitch | ANSI 140-1 · 44,45 mm (1 3/4") pitch | ANSI 160-1 · 50,80 mm (2") pitch

Pitch Pitch		Number of teeth	Diameters Outside OD	Pitch PD	Type	Dimensions Bore Min.	Max.	L	C	E	Plate thickness t_1	Mass	Designation
mm	in.	–	mm		–	mm						kg	–
31,75	**1 1/4**	**21**	229,62	213,11	A	31,75	133,35	68,26	50,80	177,80	17,580	13,2	**PHS 100-1DSA21**
38,10	**1 1/2**	**15**	202,18	183,13	A	36,51	95,25	84,93	61,91	139,70	23,470	13,6	**PHS 120-1DSA15**
		16	214,38	195,33	A	36,51	101,60	84,93	61,91	152,40	23,470	15,4	**PHS 120-1DSA16**
		17	226,57	207,26	A	36,51	112,71	84,93	61,91	164,70	23,470	16,8	**PHS 120-1DSA17**
		18	239,01	219,46	A	36,51	131,76	84,93	61,91	164,70	23,470	19,1	**PHS 120-1DSA18**
		19	251,21	231,39	A	36,51	139,70	84,93	61,91	189,31	23,470	21,3	**PHS 120-1DSA19**
		20	263,40	243,59	A	36,51	150,81	84,93	61,91	201,61	23,470	23,1	**PHS 120-1DSA20**
44,45	**1 3/4**	**14**	221,49	199,64	A	36,51	98,43	91,68	68,26	149,23	23,470	15,9	**PHS 140-1DSA14**
		15	235,71	213,87	A	36,51	112,71	91,68	68,26	163,91	23,470	19,5	**PHS 140-1DSA15**
		16	250,19	227,84	A	36,51	133,35	91,68	68,26	178,20	23,470	22,2	**PHS 140-1DSA16**
		17	264,41	241,81	A	36,51	141,29	91,68	68,26	192,48	23,470	26,3	**PHS 140-1DSA17**
		18	278,89	256,03	A	36,51	155,58	91,68	68,26	206,77	23,470	29,9	**PHS 140-1DSA18**
50,80	**2**	**15**	269,49	244,35	A	42,86	139,70	107,95	78,58	187,33	23,470	31,3	**PHS 160-1DSA15**
		16	286,00	260,35	A	42,86	152,40	107,95	78,58	203,60	23,470	34,0	**PHS 160-1DSA16**
		17	302,26	276,35	A	42,86	165,10	107,95	78,58	219,87	23,470	41,7	**PHS 160-1DSA17**
		18	318,52	292,61	A	42,86	173,04	107,95	78,58	236,54	23,470	44,0	**PHS 160-1DSA18**

All Type B or C sprockets, up to and including 25 tooth, are with hardened teeth as standard.
For any additional size sprockets with hardened teeth, add "H" before the number of teeth, e.g. PHS 40-1DSAH15.

ANSI sprockets, double simplex, taper bushed

ANSI 40-1 · 12,70 mm (1/2") pitch | ANSI 50-1 · 15,88 mm (5/8") pitch | ANSI 60-1 · 19,05 mm (3/4") pitch | ANSI 80-1 · 25,40 mm (1") pitch | ANSI 100-1 · 31,75 mm (1 1/4") pitch

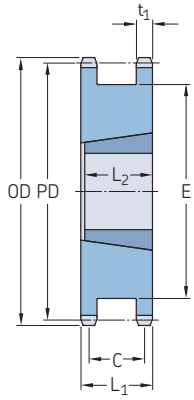

Type A taper bush

Pitch		Number of teeth	Diameters Outside OD	Pitch PD	Type	Bushing number	Dimensions Bore Min.	Max.	L1	C	E	L2	Plate thickness t_1	Mass*	Designation
mm	in.	–	mm		–	–	mm							kg	–
12,70	1/2	**18**	79,76	73,15	A	1215	12,70	31,75	35,72	28,58	58,74	38,10	7,210	0,5	**PHS 40-1DSTBH18**
		19	83,82	77,22	A	1215	12,70	31,75	35,72	28,58	63,50	38,10	7,210	0,5	**PHS 40-1DSTBH19**
		20	87,88	81,28	A	1215	12,70	31,75	35,72	28,58	66,68	38,10	7,210	0,6	**PHS 40-1DSTBH20**
		21	91,95	85,34	A	1615	12,70	41,28	35,72	28,58	70,64	38,10	7,210	0,6	**PHS 40-1DSTBH21**
		23	100,08	93,22	A	1615	12,70	41,28	35,72	28,58	78,58	38,10	7,210	0,7	**PHS 40-1DSTBH23**
		24	104,14	97,28	A	1615	12,70	41,28	35,72	28,58	82,95	38,10	7,210	0,8	**PHS 40-1DSTBH24**
15,88	5/8	**16**	89,41	81,28	A	1215	12,70	41,28	42,07	33,34	63,10	38,10	8,710	1,4	**PHS 50-1DSTBH16**
		17	94,49	86,36	A	1615	12,70	41,28	42,07	33,34	68,26	38,10	8,710	0,8	**PHS 50-1DSTBH17**
		18	99,57	91,44	A	1615	12,70	41,28	42,07	33,34	73,42	38,10	8,710	1,0	**PHS 50-1DSTBH18**
		19	104,65	96,52	A	1615	12,70	41,28	42,07	33,34	78,18	38,10	8,710	1,2	**PHS 50-1DSTBH19**
		20	109,73	101,60	A	1615	12,70	41,28	42,07	33,34	83,34	38,10	8,710	2,3	**PHS 50-1DSTBH20**
		21	114,81	106,43	A	2012	12,70	50,80	42,07	33,34	88,50	31,75	8,710	1,5	**PHS 50-1DSTBH21**
		23	124,97	116,59	A	2012	12,70	50,80	42,07	33,34	98,82	31,75	8,710	1,7	**PHS 50-1DSTBH23**
		24	130,05	121,67	A	2012	12,70	50,80	42,07	33,34	103,58	31,75	8,710	1,9	**PHS 50-1DSTBH24**
19,05	3/4	**16**	107,19	97,54	A	1615	12,70	41,28	49,21	37,70	75,80	38,10	11,660	2,0	**PHS 60-1DSTBH16**
		17	113,28	101,60	A	1615	12,70	41,28	49,21	37,70	81,76	38,10	11,660	2,0	**PHS 60-1DSTBH17**
		18	119,38	109,73	A	2012	12,70	50,80	49,21	37,70	88,11	31,75	11,660	2,3	**PHS 60-1DSTBH18**
		19	125,73	115,82	A	2012	12,70	50,80	49,21	37,70	94,06	31,75	11,660	2,6	**PHS 60-1DSTBH19**
		20	131,83	121,67	A	2517	12,70	63,50	49,21	37,70	100,41	44,45	11,660	2,5	**PHS 60-1DSTBH20**
		21	137,92	127,76	A	2517	12,70	63,50	49,21	37,70	106,36	44,45	11,660	2,9	**PHS 60-1DSTBH21**
		23	150,11	139,95	A	2517	12,70	63,50	49,21	37,70	118,67	44,45	11,660	3,3	**PHS 60-1DSTBH23**
		24	156,21	146,05	A	2517	12,70	63,50	49,21	37,70	131,76	44,45	11,660	3,7	**PHS 60-1DSTBH24**
25,40	1	**17**	151,13	138,18	A	2517	12,70	63,50	55,56	41,28	109,54	44,45	14,600	3,5	**PHS 80-1DSTBH17**
		18	159,26	146,30	A	2517	12,70	63,50	55,56	41,28	120,65	44,45	14,600	4,0	**PHS 80-1DSTBH18**
		19	167,39	154,43	A	3020	23,81	76,20	55,56	41,28	125,81	50,80	14,600	4,4	**PHS 80-1DSTBH19**
		20	175,51	162,31	A	3020	23,81	76,20	55,56	41,28	134,14	50,80	14,600	4,5	**PHS 80-1DSTBH20**
		21	183,90	170,43	A	3020	23,81	76,20	55,56	41,28	142,08	50,80	14,600	5,4	**PHS 80-1DSTBH21**
		22	192,02	178,56	A	3020	23,81	76,20	55,56	41,28	142,08	50,80	14,600	5,9	**PHS 80-1DSTBH22**
		23	200,15	186,44	A	3020	23,81	76,20	55,56	41,28	158,35	50,80	14,600	6,6	**PHS 80-1DSTBH23**
31,75	1 1/4	**15**	168,40	152,65	A	2517	19,05	63,50	68,26	50,80	116,68	44,45	17,580	5,7	**PHS 100-1DSTBH15**
		16	178,56	162,81	A	2517	19,05	63,50	68,26	50,80	127,00	44,45	17,580	5,9	**PHS 100-1DSTBH16**
		17	188,98	172,72	A	3020	23,81	76,20	68,26	50,80	137,32	50,80	17,580	6,4	**PHS 100-1DSTBH17**
		18	199,14	182,88	A	3020	23,81	76,20	68,26	50,80	147,24	50,80	17,580	7,3	**PHS 100-1DSTBH18**
		19	209,30	192,79	A	3020	23,81	76,20	68,26	50,80	157,56	50,80	17,580	9,1	**PHS 100-1DSTBH19**
		20	219,46	202,95	A	3020	23,81	76,20	68,26	50,80	167,88	44,45	17,580	12,5	**PHS 100-1DSTBH20**
		21	229,62	213,11	A	3020	23,81	76,20	68,26	50,80	177,80	50,80	17,580	12,5	**PHS 100-1DSTBH21**

* Mass for rim only
All Type B or C sprockets, up to and including 25 tooth, are with hardened teeth as standard.
For any additional size sprockets with hardened teeth, add "H" before the number of teeth, e.g. PHS 40-1DSTBH18.

ANSI sprockets, duplex, pilot bore

ANSI 35-2 · 9,53 mm (3/8") pitch | ANSI 40-2 · 12,70 mm (1/2") pitch

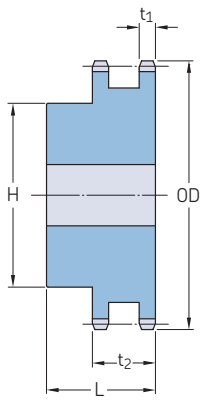

Type B

Pitch		Number of teeth	Outside diameter	Type	Dimensions Bore				Plate thickness		Mass	Designation
			OD		Min.	Max.	H	L	t_1	t_2		
mm	in.	–	mm	–	mm						kg	–
9,53	3/8	**12**	41,40	B	12,70	14,29	25,00	31,75	4,110	14,250	0,15	**PHS 35-2BH12**
		13	44,45	B	12,70	17,46	28,18	31,75	4,110	14,250	0,16	**PHS 35-2BH13**
		14	47,50	B	12,70	22,23	31,75	31,75	4,110	14,250	0,20	**PHS 35-2BH14**
		15	50,55	B	12,70	23,81	35,72	31,75	4,110	14,250	0,25	**PHS 35-2BH15**
		16	53,59	B	12,70	23,81	37,31	31,75	4,110	14,250	0,29	**PHS 35-2BH16**
		17	56,64	B	12,70	17,46	40,48	31,75	4,110	14,250	0,34	**PHS 35-2BH17**
		18	59,69	B	12,70	20,64	43,66	31,75	4,110	14,250	0,38	**PHS 35-2BH18**
		19	62,74	B	12,70	23,81	47,63	31,75	4,110	14,250	0,44	**PHS 35-2BH19**
		20	65,79	B	19,05	23,81	49,21	34,93	4,110	14,250	0,49	**PHS 35-2BH20**
		21	68,83	B	19,05	34,93	52,39	34,93	4,110	14,250	0,56	**PHS 35-2BH21**
		22	71,88	B	19,05	36,51	55,56	34,93	4,110	14,250	0,64	**PHS 35-2BH22**
		23	74,93	B	19,05	38,10	57,15	34,93	4,110	14,250	0,70	**PHS 35-2BH23**
		24	77,98	B	19,05	38,10	57,15	34,93	4,110	14,250	0,73	**PHS 35-2BH24**
		25	81,03	B	19,05	38,10	57,15	34,93	4,110	14,250	0,75	**PHS 35-2BH25**
		26	84,07	B	19,05	44,45	63,50	34,93	4,110	14,250	0,90	**PHS 35-2B26**
		30	96,27	B	19,05	44,45	63,50	34,93	4,110	14,250	1,06	**PHS 35-2B30**
		36	114,55	B	19,05	44,45	63,50	34,93	4,110	14,250	1,36	**PHS 35-2B36**
		42	132,84	B	19,05	44,45	63,50	34,93	4,110	14,250	1,72	**PHS 35-2B42**
		48	151,13	B	19,05	44,45	63,50	34,93	4,110	14,250	2,11	**PHS 35-2B48**
		52	163,32	B	19,05	44,45	63,50	34,93	4,110	14,250	2,45	**PHS 35-2B52**
		60	187,45	B	19,05	44,45	63,50	34,93	4,110	14,250	3,10	**PHS 35-2B60**
		68	211,84	B	19,05	60,33	88,90	38,10	4,110	14,250	4,54	**PHS 35-2B68**
		72	223,77	B	19,05	60,33	88,90	38,10	4,110	14,250	5,01	**PHS 35-2B72**
		76	235,97	B	19,05	60,33	88,90	38,10	4,110	14,250	5,42	**PHS 35-2B76**
		84	260,35	B	19,05	60,33	88,90	38,10	4,110	14,250	6,79	**PHS 35-2B84**
		95	293,62	B	25,40	60,33	88,90	38,10	4,110	14,250	7,90	**PHS 35-2B95**
		96	296,67	B	25,40	60,33	88,90	38,10	4,110	14,250	8,23	**PHS 35-2B96**
		102	314,96	B	25,40	60,33	88,90	38,10	4,110	14,250	9,04	**PHS 35-2B102**
12,70	1/2	**11**	50,80	B	12,70	19,05	36,51	38,10	6,990	21,360	0,28	**PHS 40-2BH11**
		12	55,12	B	12,70	23,81	39,69	38,10	6,990	21,360	0,34	**PHS 40-2BH12**
		13	59,18	B	12,70	25,40	38,10	38,10	6,990	21,360	0,39	**PHS 40-2BH13**
		14	63,25	B	12,70	28,58	42,86	38,10	6,990	21,360	0,49	**PHS 40-2BH14**
		15	67,31	B	12,70	31,75	46,04	38,10	6,990	21,360	0,56	**PHS 40-2BH15**
		16	71,37	B	15,88	34,93	50,80	38,10	6,990	21,360	0,64	**PHS 40-2BH16**
		17	75,69	B	15,88	36,51	53,98	38,10	6,990	21,360	0,74	**PHS 40-2BH17**
		18	79,76	B	15,88	38,10	58,74	38,10	6,990	21,360	0,87	**PHS 40-2BH18**
		19	83,82	B	15,88	44,45	63,50	38,10	6,990	21,360	1,01	**PHS 40-2BH19**
		20	87,88	B	15,88	47,63	66,68	41,28	6,990	21,360	1,20	**PHS 40-2BH20**
		21	91,95	B	15,88	47,63	69,85	41,28	6,990	21,360	1,33	**PHS 40-2BH21**
		22	96,01	B	15,88	47,63	73,03	41,28	6,990	21,360	1,44	**PHS 40-2BH22**
		23	100,08	B	15,88	50,80	76,20	41,28	6,990	21,360	1,60	**PHS 40-2BH23**
		24	104,14	B	15,88	57,15	82,55	41,28	6,990	21,360	1,83	**PHS 40-2BH24**
		25	108,20	B	15,88	57,15	82,55	41,28	6,990	21,360	1,93	**PHS 40-2BH25**
		26	112,27	B	15,88	57,15	82,55	41,28	6,990	21,360	2,03	**PHS 40-2B26**
		30	128,52	B	22,23	57,15	82,55	41,28	6,990	21,360	2,42	**PHS 40-2B30**
		35	148,84	B	22,23	57,15	82,55	41,28	6,990	21,360	3,08	**PHS 40-2B35**
		36	152,91	B	23,81	63,50	95,25	41,28	6,990	21,360	3,27	**PHS 40-2B36**
		40	168,91	B	23,81	63,50	95,25	44,45	6,990	21,360	4,26	**PHS 40-2B40**
		42	177,04	B	23,81	63,50	95,25	44,45	6,990	21,360	4,63	**PHS 40-2B42**
		45	189,23	B	23,81	63,50	95,25	44,45	6,990	21,360	5,15	**PHS 40-2B45**
		48	201,42	B	23,81	63,50	95,25	44,45	6,990	21,360	5,74	**PHS 40-2B48**
		52	217,68	B	23,81	63,50	95,25	44,45	6,990	21,360	6,56	**PHS 40-2B52**
		54	225,81	B	23,81	63,50	95,25	44,45	6,990	21,360	7,02	**PHS 40-2B54**

Maximum bores can accommodate standard keyways. Larger bores are available where a shallow keyway is used or no keyway is required.
All Type B or C sprockets, up to and including 25 tooth, are with hardened teeth as standard.
For any additional size sprockets with hardened teeth, add "H" before the number of teeth, e.g. PHS 35-2BH12.

ANSI sprockets, duplex, pilot bore

ANSI 40-2 · 12,70 mm (1/2") pitch | ANSI 50-2 · 15,88 mm (5/8") pitch | ANSI 60-2 · 19,05 mm (3/4") pitch

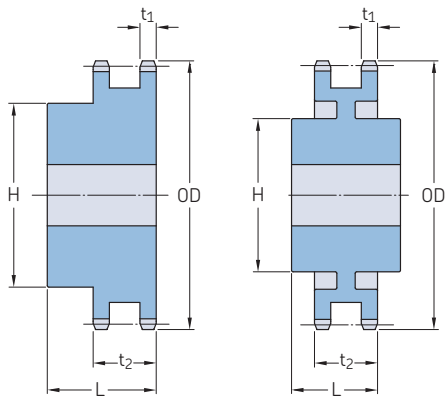

Type B Type C

Pitch		Number of teeth	Outside diameter	Type	Dimensions Bore				Plate thickness		Mass	Designation
			OD		Min.	Max.	H	L	t_1	t_2		
mm	in.	–	mm	–	mm						kg	–
12,70	1/2	**60**	249,94	B	23,81	63,50	95,25	44,45	6,990	21,360	8,44	**PHS 40-2B60**
		68	282,45	B	30,16	69,85	107,95	53,98	6,990	21,360	11,32	**PHS 40-2B68**
		72	298,45	B	30,16	69,85	107,95	53,98	6,990	21,360	12,65	**PHS 40-2B72**
		76	314,71	B	30,16	69,85	107,95	53,98	6,990	21,360	13,69	**PHS 40-2B76**
		84	346,96	B	30,16	69,85	107,95	53,98	6,990	21,360	16,44	**PHS 40-2B84**
		95	391,41	B	30,16	69,85	107,95	53,98	6,990	21,360	17,62	**PHS 40-2B95**
		96	395,48	B	30,16	69,85	107,95	53,98	6,990	21,360	17,92	**PHS 40-2B96**
		102	419,86	B	30,16	69,85	107,95	53,98	6,990	21,360	19,38	**PHS 40-2B102**
		112	460,25	B	30,16	69,85	107,95	53,98	6,990	21,360	25,19	**PHS 40-2B112**
15,88	5/8	**11**	63,50	B	15,88	23,81	37,31	44,45	8,430	26,540	0,44	**PHS 50-2BH11**
		12	68,83	B	15,88	28,58	42,86	44,45	8,430	26,540	0,57	**PHS 50-2BH12**
		13	73,91	B	15,88	33,34	47,63	44,45	8,430	26,540	0,71	**PHS 50-2BH13**
		14	78,99	B	15,88	34,93	52,39	44,45	8,430	26,540	0,84	**PHS 50-2BH14**
		15	84,33	B	19,05	38,10	58,74	44,45	8,430	26,540	1,01	**PHS 50-2BH15**
		16	89,41	B	19,05	44,45	63,50	44,45	8,430	26,540	1,19	**PHS 50-2BH16**
		17	94,49	B	19,05	47,63	68,26	44,45	8,430	26,540	1,38	**PHS 50-2BH17**
		18	99,57	B	19,05	49,21	74,61	44,45	8,430	26,540	1,62	**PHS 50-2BH18**
		19	104,65	B	25,40	53,98	79,38	44,45	8,430	26,540	1,77	**PHS 50-2BH19**
		20	109,73	B	25,40	57,15	82,55	44,45	8,430	26,540	1,93	**PHS 50-2BH20**
		21	114,81	B	25,40	60,33	88,90	44,45	8,430	26,540	2,22	**PHS 50-2BH21**
		22	119,89	B	25,40	60,33	90,49	47,63	8,430	26,540	2,53	**PHS 50-2BH22**
		23	124,97	B	25,40	63,50	92,08	47,63	8,430	26,540	2,77	**PHS 50-2BH23**
		24	130,05	B	25,40	63,50	92,08	47,63	8,430	26,540	2,95	**PHS 50-2BH24**
		25	135,13	B	25,40	63,50	92,08	47,63	8,430	26,540	3,15	**PHS 50-2BH25**
		26	140,21	B	25,40	63,50	95,25	47,63	8,430	26,540	3,42	**PHS 50-2B26**
		30	160,53	B	25,40	63,50	95,25	47,63	8,430	26,540	4,26	**PHS 50-2B30**
		32	170,69	B	25,40	63,50	95,25	47,63	8,430	26,540	4,74	**PHS 50-2B32**
		35	185,93	B	25,40	63,50	95,25	47,63	8,430	26,540	5,57	**PHS 50-2B35**
		36	191,01	B	30,16	69,85	101,60	53,98	8,430	26,540	6,32	**PHS 50-2B36**
		40	211,33	B	30,16	69,85	101,60	53,98	8,430	26,540	7,50	**PHS 50-2B40**
		42	221,49	B	30,16	69,85	101,60	53,98	8,430	26,540	8,13	**PHS 50-2B42**
		45	236,47	B	30,16	69,85	101,60	53,98	8,430	26,540	9,21	**PHS 50-2B45**
		48	251,71	B	30,16	69,85	107,95	60,33	8,430	26,540	10,92	**PHS 50-2B48**
		52	272,03	B	30,16	69,85	107,95	60,33	8,430	26,540	12,44	**PHS 50-2B52**
		54	282,19	B	30,16	69,85	107,95	60,33	8,430	26,540	13,23	**PHS 50-2B54**
		60	312,42	B	33,34	76,20	114,30	60,33	8,430	26,540	16,27	**PHS 50-2B60**
		68	352,81	B	33,34	76,20	114,30	60,33	8,430	26,540	20,40	**PHS 50-2B68**
		72	373,13	B	33,34	76,20	114,30	60,33	8,430	26,540	22,78	**PHS 50-2B72**
		76	393,45	B	33,34	76,20	114,30	60,33	8,430	26,540	20,70	**PHS 50-2B76**
		84	433,83	B	33,34	76,20	114,30	60,33	8,430	26,540	23,42	**PHS 50-2B84**
		95	489,46	B	33,34	76,20	114,30	60,33	8,430	26,540	29,18	**PHS 50-2B95**
		96	494,54	B	33,34	76,20	114,30	60,33	8,430	26,540	30,58	**PHS 50-2B96**
		102	524,76	B	33,34	76,20	114,30	60,33	8,430	26,540	32,97	**PHS 50-2B102**
		112	575,31	B	33,34	84,14	133,35	60,33	8,430	26,540	40,92	**PHS 50-2B112**
19,05	3/4	**11**	76,20	B	25,40	31,75	46,04	53,98	11,280	34,060	0,73	**PHS 60-2BH11**
		12	82,55	B	25,40	36,51	53,98	53,98	11,280	34,060	1,00	**PHS 60-2BH12**
		13	88,65	B	25,40	38,10	57,15	53,98	11,280	34,060	1,18	**PHS 60-2BH13**
		14	95,00	B	25,40	44,45	63,50	53,98	11,280	34,060	1,47	**PHS 60-2BH14**
		15	101,09	B	25,40	47,63	71,44	53,98	11,280	34,060	1,80	**PHS 60-2BH15**
		16	107,19	B	25,40	50,80	76,20	53,98	11,280	34,060	2,10	**PHS 60-2BH16**
		17	113,28	B	25,40	57,15	82,55	53,98	11,280	34,060	2,45	**PHS 60-2BH17**
		18	119,38	B	25,40	60,33	88,90	53,98	11,280	34,060	2,83	**PHS 60-2BH18**
		19	125,73	B	25,40	63,50	93,66	53,98	11,280	34,060	3,18	**PHS 60-2BH19**
		20	131,83	B	25,40	63,50	95,25	53,98	11,280	34,060	3,50	**PHS 60-2BH20**

Maximum bores can accommodate standard keyways. Larger bores are available where a shallow keyway is used or no keyway is required.
All Type B or C sprockets, up to and including 25 tooth, are with hardened teeth as standard.
For any additional size sprockets with hardened teeth, add "H" before the number of teeth, e.g. PHS 35-2BH12.

ANSI sprockets, duplex, pilot bore

ANSI 60-2 · 19,05 mm (3/4") pitch | ANSI 80-2 · 25,40 mm (1") pitch | ANSI 100-2 · 31,75 mm (1 1/4") pitch | ANSI 120-2 · 38,10 mm (1 1/2") pitch

Pitch		Number of teeth	Outside diameter	Type	Dimensions Bore				Plate thickness		Mass	Designation
			OD		Min.	Max.	H	L	t_1	t_2		
mm	in.	–	mm	–	mm						kg	–
19,05	3/4	**21**	137,92	B	25,40	69,85	104,78	53,98	11,280	34,060	4,00	**PHS 60-2BH21**
		22	144,02	B	25,40	69,85	107,95	53,98	11,280	34,060	4,39	**PHS 60-2BH22**
		23	150,11	B	25,40	69,85	107,95	53,98	11,280	34,060	4,67	**PHS 60-2BH23**
		24	156,21	B	25,40	69,85	107,95	53,98	11,280	34,060	5,05	**PHS 60-2BH24**
		25	162,31	B	25,40	69,85	107,95	53,98	11,280	34,060	5,42	**PHS 60-2BH25**
		26	168,40	B	25,40	69,85	107,95	53,98	11,280	34,060	5,76	**PHS 60-2B26**
		30	192,79	B	25,40	69,85	107,95	53,98	11,280	34,060	7,42	**PHS 60-2B30**
		32	204,98	B	31,75	76,20	114,30	60,33	11,280	34,060	8,85	**PHS 60-2B32**
		35	223,01	B	31,75	76,20	114,30	60,33	11,280	34,060	10,34	**PHS 60-2B35**
		36	229,11	B	31,75	76,20	114,30	60,33	11,280	34,060	10,80	**PHS 60-2B36**
		40	253,49	B	31,75	82,55	120,65	69,85	11,280	34,060	13,99	**PHS 60-2B40**
		42	265,68	B	31,75	82,55	120,65	69,85	11,280	34,060	15,00	**PHS 60-2B42**
		45	283,97	B	31,75	82,55	120,65	69,85	11,280	34,060	16,82	**PHS 60-2B45**
		52	326,39	B	31,75	82,55	120,65	69,85	11,280	34,060	22,09	**PHS 60-2B52**
		60	374,90	B	31,75	82,55	120,65	69,85	11,280	34,060	28,62	**PHS 60-2B60**
		68	423,42	C	31,75	84,14	127,00	76,20	11,280	34,060	24,35	**PHS 60-2C68**
		72	447,80	C	31,75	84,14	127,00	76,20	11,280	34,060	24,38	**PHS 60-2C72**
		76	471,93	C	31,75	84,14	127,00	76,20	11,280	34,060	27,34	**PHS 60-2C76**
		95	587,25	C	31,75	95,25	139,70	88,90	11,280	34,060	39,53	**PHS 60-2C95**
25,40	1	**10**	93,47	B	25,40	38,10	65,09	69,85	14,150	43,430	1,63	**PHS 80-2BH10**
		11	101,85	B	25,40	44,45	63,50	63,50	14,150	43,430	1,81	**PHS 80-2BH11**
		12	109,98	B	25,40	47,63	72,23	63,50	14,150	43,430	2,31	**PHS 80-2BH12**
		13	118,36	B	25,40	57,15	80,17	63,50	14,150	43,430	2,86	**PHS 80-2BH13**
		14	126,49	B	25,40	60,33	88,11	63,50	14,150	43,430	3,45	**PHS 80-2BH14**
		15	134,62	B	25,40	63,50	96,44	63,50	14,150	43,430	4,08	**PHS 80-2BH15**
		16	143,00	B	25,40	69,85	101,60	69,85	14,150	43,430	4,99	**PHS 80-2BH16**
		17	151,13	B	25,40	76,20	112,32	69,85	14,150	43,430	5,99	**PHS 80-2BH17**
		18	159,26	B	25,40	82,55	120,25	69,85	14,150	43,430	6,80	**PHS 80-2BH18**
		19	167,39	B	25,40	84,14	127,00	69,85	14,150	43,430	7,71	**PHS 80-2BH19**
		20	175,51	B	25,40	84,14	127,00	69,85	14,150	43,430	8,26	**PHS 80-2BH20**
		21	183,90	B	25,40	84,14	127,00	69,85	14,150	43,430	8,89	**PHS 80-2BH21**
		22	192,02	B	25,40	84,14	127,00	69,85	14,150	43,430	9,53	**PHS 80-2BH22**
		23	200,15	B	25,40	84,14	127,00	69,85	14,150	43,430	10,34	**PHS 80-2BH23**
		24	208,28	B	25,40	88,90	133,35	69,85	14,150	43,430	11,39	**PHS 80-2BH24**
		25	216,41	B	25,40	88,90	133,35	76,20	14,150	43,430	12,84	**PHS 80-2BH25**
		26	224,54	B	25,40	88,90	133,35	76,20	14,150	43,430	13,56	**PHS 80-2B26**
		30	256,79	B	31,75	95,25	146,05	76,20	14,150	43,430	17,92	**PHS 80-2B30**
		32	273,05	B	31,75	95,25	146,05	76,20	14,150	43,430	19,87	**PHS 80-2B32**
		35	297,43	B	31,75	95,25	146,05	76,20	14,150	43,430	22,27	**PHS 80-2B35**
		36	305,56	B	31,75	95,25	146,05	79,38	14,150	43,430	24,58	**PHS 80-2B36**
		42	354,08	B	31,75	95,25	146,05	79,38	14,150	43,430	32,43	**PHS 80-2B42**
		45	378,46	B	31,75	95,25	146,05	79,38	14,150	43,430	33,34	**PHS 80-2B45**
		52	435,10	C	38,10	95,25	146,05	95,25	14,150	43,430	35,56	**PHS 80-2C52**
		60	499,87	C	38,10	95,25	146,05	95,25	14,150	43,430	42,32	**PHS 80-2C60**
		68	564,64	C	38,10	96,84	152,40	101,60	14,150	43,430	43,64	**PHS 80-2C68**
		76	629,41	C	38,10	96,84	152,40	101,60	14,150	43,430	51,26	**PHS 80-2C76**
		95	783,08	C	38,10	101,60	152,40	107,95	14,150	43,430	74,84	**PHS 80-2C95**
31,75	1 1/4	**9**	106,17	B	25,40	41,28	60,33	73,03	16,990	52,760	2,09	**PHS 100-2BH9**
		10	116,84	B	25,40	47,63	69,85	73,03	16,990	52,760	2,81	**PHS 100-2BH10**
		11	127,25	B	25,40	53,98	79,38	73,03	16,990	52,760	3,58	**PHS 100-2BH11**
		12	137,67	B	28,58	57,15	85,73	73,03	16,990	52,760	4,22	**PHS 100-2BH12**
		13	147,83	B	28,58	63,50	96,84	73,03	16,990	52,760	5,17	**PHS 100-2BH13**
		14	158,24	B	28,58	69,85	106,36	73,03	16,990	52,760	6,17	**PHS 100-2BH14**
		15	168,40	B	31,75	79,38	117,48	79,38	16,990	52,760	7,76	**PHS 100-2BH15**
		16	178,56	B	31,75	84,14	127,00	79,38	16,990	52,760	9,12	**PHS 100-2BH16**
		17	188,98	B	31,75	88,90	133,35	79,38	16,990	52,760	10,48	**PHS 100-2BH17**
		18	199,14	B	31,75	88,90	133,35	79,38	16,990	52,760	11,52	**PHS 100-2BH18**
		19	209,30	B	31,75	95,25	139,70	85,73	16,990	52,760	13,43	**PHS 100-2BH19**
		20	219,46	B	31,75	95,25	139,70	85,73	16,990	52,760	14,70	**PHS 100-2BH20**
		21	229,62	B	31,75	95,25	139,70	85,73	16,990	52,760	16,01	**PHS 100-2BH21**
		22	239,78	B	31,75	95,25	139,70	85,73	16,990	52,760	17,42	**PHS 100-2BH22**
		23	249,94	B	31,75	95,25	139,70	85,73	16,990	52,760	18,73	**PHS 100-2BH23**
		24	260,35	B	31,75	95,25	146,05	85,73	16,990	52,760	20,46	**PHS 100-2BH24**
		25	270,51	B	31,75	95,25	146,05	85,73	16,990	52,760	22,00	**PHS 100-2BH25**
		26	280,67	B	38,10	95,25	146,05	85,73	16,990	52,760	23,36	**PHS 100-2B26**
		30	321,06	B	38,10	95,25	146,05	85,73	16,990	52,760	29,48	**PHS 100-2B30**
		35	371,86	C	38,10	96,84	152,40	107,95	16,990	52,760	34,02	**PHS 100-2C35**
		45	473,20	C	38,10	96,84	152,40	114,30	16,990	52,760	46,72	**PHS 100-2C45**
		60	624,84	C	38,10	136,53	190,50	127,00	16,990	52,760	79,38	**PHS 100-2C60**
		70	725,93	C	38,10	136,53	190,50	127,00	16,990	52,760	89,36	**PHS 100-2C70**
		80	827,28	C	38,10	136,53	190,50	127,00	16,990	52,760	104,78	**PHS 100-2C80**
38,10	1 1/2	**11**	152,65	B	38,10	60,33	90,49	95,25	22,710	68,150	6,17	**PHS 120-2BH11**
		12	165,10	B	38,10	69,85	103,19	95,25	22,710	68,150	7,85	**PHS 120-2BH12**

Maximum bores can accommodate standard keyways. Larger bores are available where a shallow keyway is used or no keyway is required.
All Type B or C sprockets, up to and including 25 tooth, are with hardened teeth as standard.
For any additional size sprockets with hardened teeth, add "H" before the number of teeth, e.g. PHS 35-2BH12.

ANSI sprockets, duplex, pilot bore

ANSI 120-2 · 38,10 mm (1½") pitch | ANSI 140-2 · 44,45 mm (1¾") pitch | ANSI 160-2 · 50,80 mm (2") pitch

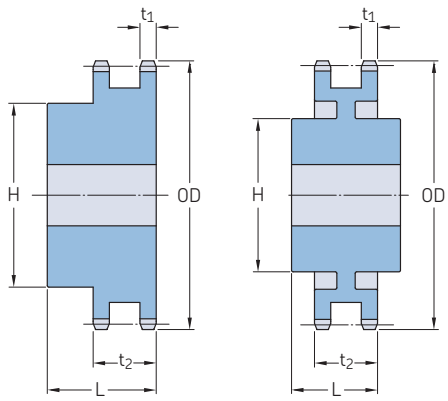

Type B Type C

Pitch		Number of teeth	Outside diameter	Type	Dimensions Bore				Plate thickness		Mass	Designation
			OD		Min.	Max.	H	L	t_1	t_2		
mm	in.	–	mm	–	mm						kg	–
38,10	**1 ½**	**13**	177,55	B	38,10	76,20	114,30	95,25	22,710	68,150	9,57	**PHS 120-2BH13**
		14	189,74	B	38,10	84,14	127,00	95,25	22,710	68,150	11,61	**PHS 120-2BH14**
		15	202,18	B	38,10	88,90	133,35	95,25	22,710	68,150	13,56	**PHS 120-2BH15**
		16	214,38	B	38,10	88,90	133,35	95,25	22,710	68,150	15,33	**PHS 120-2BH16**
		17	226,57	B	38,10	88,90	133,35	95,25	22,710	68,150	16,74	**PHS 120-2BH17**
		18	239,01	B	38,10	88,90	133,35	95,25	22,710	68,150	19,01	**PHS 120-2BH18**
		19	251,21	B	38,10	88,90	133,35	95,25	22,710	68,150	21,09	**PHS 120-2BH19**
		20	263,40	B	38,10	88,90	139,70	95,25	22,710	68,150	22,77	**PHS 120-2BH20**
		21	275,59	B	38,10	88,90	139,70	95,25	22,710	68,150	25,22	**PHS 120-2BH21**
		22	287,78	B	38,10	96,84	146,05	101,60	22,710	68,150	29,03	**PHS 120-2BH22**
		23	299,97	B	38,10	114,30	165,10	101,60	22,710	68,150	34,02	**PHS 120-2BH23**
		24	312,17	B	38,10	114,30	165,10	101,60	22,710	68,150	35,83	**PHS 120-2BH24**
		25	324,36	B	38,10	114,30	165,10	101,60	22,710	68,150	38,10	**PHS 120-2BH25**
		26	336,55	B	38,10	114,30	165,10	101,60	22,710	68,150	40,82	**PHS 120-2B26**
		30	385,32	B	38,10	114,30	165,10	101,60	22,710	68,150	53,98	**PHS 120-2B30**
		35	446,28	C	38,10	136,53	190,50	152,40	22,710	71,580	67,13	**PHS 120-2C35**
		45	567,69	C	38,10	136,53	190,50	152,40	22,710	71,580	85,28	**PHS 120-2C45**
		60	749,81	C	38,10	161,93	241,30	158,75	22,710	71,580	139,25	**PHS 120-2C60**
44,45	**1 ¾**	**13**	207,01	B	41,28	84,14	127,00	95,25	22,710	71,580	13,15	**PHS 140-2BH13**
		14	221,49	B	41,28	95,25	139,70	95,25	22,710	71,580	15,79	**PHS 140-2BH14**
		15	235,71	B	41,28	114,30	165,10	95,25	22,710	71,580	19,28	**PHS 140-2BH15**
		16	250,19	B	41,28	133,35	177,80	101,60	22,710	71,580	21,82	**PHS 140-2BH16**
		17	264,41	B	41,28	133,35	177,80	101,60	22,710	71,580	26,08	**PHS 140-2BH17**
		18	278,89	B	44,45	133,35	177,80	101,60	22,710	71,580	29,76	**PHS 140-2BH18**
		19	293,12	B	44,45	133,35	177,80	101,60	22,710	71,580	32,66	**PHS 140-2BH19**
		20	307,34	B	44,45	133,35	177,80	101,60	22,710	71,580	34,47	**PHS 140-2BH20**
		21	321,56	B	44,45	133,35	177,80	101,60	22,710	71,580	37,19	**PHS 140-2BH21**
		22	335,79	B	44,45	133,35	177,80	101,60	22,710	71,580	42,64	**PHS 140-2BH22**
		23	350,01	B	44,45	133,35	177,80	101,60	22,710	71,580	45,36	**PHS 140-2BH23**
		24	364,24	B	44,45	133,35	177,80	101,60	22,710	71,580	47,17	**PHS 140-2BH24**
		25	378,46	B	44,45	133,35	177,80	101,60	22,710	71,580	54,43	**PHS 140-2BH25**
		26	392,68	B	44,45	133,35	177,80	101,60	22,710	71,580	58,06	**PHS 140-2B26**
		35	520,45	C	38,10	136,53	190,50	152,40	22,710	71,580	81,65	**PHS 140-2C35**
		45	662,43	C	38,10	136,53	190,50	152,40	22,710	71,580	105,23	**PHS 140-2C45**
		60	874,78	C	38,10	161,93	241,30	158,75	22,710	71,580	168,74	**PHS 140-2C60**
50,80	**2**	**13**	236,47	B	50,80	101,60	152,40	120,65	28,420	86,970	21,77	**PHS 160-2BH13**
		14	252,98	B	50,80	120,65	171,45	120,65	28,420	86,970	26,31	**PHS 160-2BH14**
		15	269,49	B	50,80	133,35	177,80	120,65	28,420	86,970	30,84	**PHS 160-2BH15**
		16	286,00	B	50,80	133,35	177,80	120,65	28,420	86,970	34,02	**PHS 160-2BH16**
		17	302,26	B	50,80	133,35	177,80	120,65	28,420	86,970	41,28	**PHS 160-2BH17**
		18	318,52	B	50,80	133,35	177,80	120,65	28,420	86,970	43,54	**PHS 160-2BH18**
		19	335,03	B	50,80	133,35	177,80	120,65	28,420	86,970	48,53	**PHS 160-2BH19**
		20	351,28	B	50,80	133,35	177,80	120,65	28,420	86,970	53,98	**PHS 160-2BH20**
		21	367,54	B	50,80	136,53	190,50	120,65	28,420	86,970	58,97	**PHS 160-2BH21**
		22	383,79	B	50,80	136,53	190,50	120,65	28,420	86,970	63,96	**PHS 160-2BH22**
		23	400,05	B	50,80	136,53	190,50	120,65	28,420	86,970	71,21	**PHS 160-2BH23**
		24	416,31	B	50,80	136,53	190,50	120,65	28,420	86,970	77,56	**PHS 160-2BH24**
		25	432,56	B	50,80	136,53	190,50	120,65	28,420	86,970	84,82	**PHS 160-2BH25**
		26	448,82	B	50,80	136,53	190,50	120,65	28,420	86,970	91,17	**PHS 160-2B26**
		35	594,87	C	38,10	171,45	241,30	168,28	28,420	86,970	138,80	**PHS 160-2C35**
		45	756,92	C	38,10	177,80	254,00	180,98	28,420	86,970	195,50	**PHS 160-2C45**
		60	999,74	C	38,10	177,80	254,00	180,98	28,420	86,970	255,83	**PHS 160-2C60**

Maximum bores can accommodate standard keyways. Larger bores are available where a shallow keyway is used or no keyway is required.
All Type B or C sprockets, up to and including 25 tooth, are with hardened teeth as standard.
For any additional size sprockets with hardened teeth, add "H" before the number of teeth, e.g. PHS 35-2BH12.

ANSI sprockets, duplex, pilot bore

ANSI 200-2 · 63,50 mm (2 1/2") pitch

Pitch		Number of teeth	Outside diameter	Type	Dimensions Bore				Plate thickness		Mass	Designation
			OD		Min.	Max.	H	L	t_1	t_2		
mm	in.	–	mm	–	mm						kg	–
63,50	**2 1/2**	**11**	254,51	B	50,80	95,25	139,70	149,23	34,140	105,690	25,85	**PHS 200-2BH11**
		12	275,08	B	50,80	114,30	165,10	158,75	34,140	105,690	36,29	**PHS 200-2BH12**
		13	295,66	B	50,80	133,35	177,80	161,93	34,140	105,690	43,54	**PHS 200-2BH13**
		14	316,48	B	50,80	139,70	203,20	161,93	34,140	105,690	53,98	**PHS 200-2BH14**
		15	336,80	B	50,80	146,05	215,90	161,93	34,140	105,690	62,60	**PHS 200-2BH15**
		16	357,38	B	50,80	146,05	215,90	168,28	34,140	105,690	73,03	**PHS 200-2BH16**
		17	377,70	B	50,80	146,05	215,90	168,28	34,140	105,690	80,74	**PHS 200-2BH17**
		18	398,27	B	50,80	146,05	215,90	168,28	34,140	105,690	88,90	**PHS 200-2BH18**
		19	418,59	B	50,80	146,05	215,90	168,28	34,140	105,690	98,43	**PHS 200-2BH19**
		20	439,17	B	50,80	146,05	215,90	168,28	34,140	105,690	107,05	**PHS 200-2BH20**
		21	459,49	B	50,80	146,05	215,90	168,28	34,140	105,690	113,40	**PHS 200-2BH21**
		22	479,81	B	50,80	146,05	215,90	168,28	34,140	105,690	128,82	**PHS 200-2BH22**
		23	500,13	B	50,80	146,05	215,90	168,28	34,140	105,690	139,71	**PHS 200-2BH23**
		24	520,45	B	50,80	146,05	215,90	168,28	34,140	105,690	149,69	**PHS 200-2BH24**
		25	540,77	B	50,80	146,05	215,90	168,28	34,140	105,690	162,39	**PHS 200-2BH25**
		26	561,09	B	50,80	146,05	215,90	168,28	34,140	105,690	175,09	**PHS 200-2B26**
		45	946,15	C	38,10	177,80	254,00	215,90	34,140	105,690	301,64	**PHS 200-2C45**
		60	1249,68	C	38,10	177,80	254,00	228,60	34,140	105,690	440,89	**PHS 200-2C60**

Maximum bores can accommodate standard keyways. Larger bores are available where a shallow keyway is used or no keyway is required.
All Type B or C sprockets, up to and including 25 tooth, are with hardened teeth as standard.
For any additional size sprockets with hardened teeth, add "H" before the number of teeth, e.g. PHS 35-2BH12.

ANSI sprockets, duplex, taper bushed

ANSI 35-2 · 9,53 mm (3/8") pitch | ANSI 40-2 · 12,70 mm (1/2") pitch | ANSI 50-2 · 15,88 mm (5/8") pitch

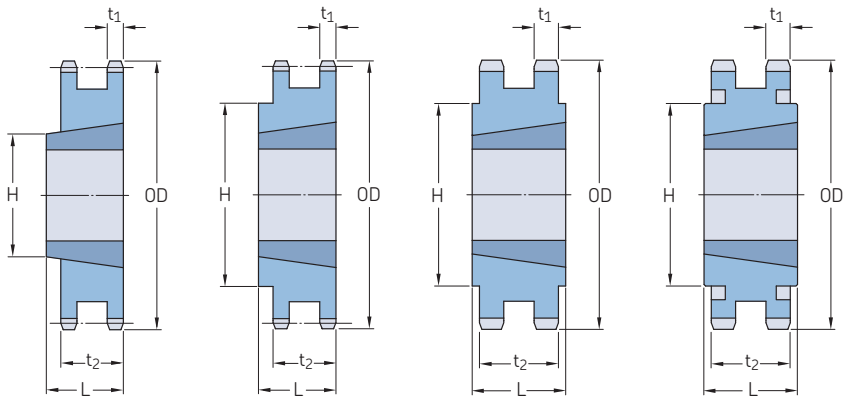

Type A Type B Type C Type C1

Pitch		Number of teeth	Diameters Outside	Pitch	Type	Bushing number	Dimensions Bore				Plate thickness		Mass Rim	Bushing	Designation
			OD	PD			Min.	Max.	L	H	t_1	t_2			
mm	in.	–	mm		–	–	mm						kg		–
9,53	3/8	**19**	62,74	57,91	B	1008	9,53	25,40	22,23	46,43	4,110	14,250	0,3	0,1	**PHS 35-2TBH19**
		20	65,79	60,96	B	1008	9,53	25,40	22,23	49,21	4,110	14,250	0,4	0,1	**PHS 35-2TBH20**
		21	68,83	64,01	B	1008	9,53	25,40	22,23	52,39	4,110	14,250	0,6	0,1	**PHS 35-2TBH21**
		22	71,88	66,80	B	1008	9,53	25,40	22,23	55,56	4,110	14,250	0,8	0,1	**PHS 35-2TBH22**
		23	77,98	72,90	B	1210	15,88	31,75	25,40	61,91	4,110	14,250	0,8	0,3	**PHS 35-2TBH24**
		26	84,07	78,99	B	1210	15,88	31,75	25,40	66,68	4,110	14,250	0,9	0,3	**PHS 35-2TB26**
		30	96,27	91,19	B	1610	12,70	41,28	25,40	79,38	4,110	14,250	0,8	0,4	**PHS 35-2TB30**
		32	102,36	97,28	B	1610	12,70	41,28	25,40	82,55	4,110	14,250	0,9	0,4	**PHS 35-2TB32**
		35	111,51	106,17	B	1610	12,70	41,28	25,40	82,55	4,110	14,250	1,0	0,4	**PHS 35-2TB35**
		40	126,75	121,41	B	1610	12,70	41,28	25,40	82,55	4,110	14,250	1,3	0,4	**PHS 35-2TB40**
		45	141,99	136,65	B	1610	12,70	41,28	25,40	82,55	4,110	14,250	1,5	0,4	**PHS 35-2TB45**
		48	151,13	145,54	B	1610	12,70	41,28	25,40	92,08	4,110	14,250	1,6	0,4	**PHS 35-2TB48**
		54	169,16	163,83	B	1610	12,70	41,28	25,40	92,08	4,110	14,250	1,8	0,4	**PHS 35-2TB54**
		60	187,45	182,12	B	1610	12,70	41,28	25,40	92,08	4,110	14,250	2,2	0,4	**PHS 35-2TB60**
		70	217,68	212,34	B	1610	12,70	41,28	25,40	92,08	4,110	14,250	2,9	0,4	**PHS 35-2TB70**
		80	248,16	242,57	B	1610	12,70	41,28	25,40	92,08	4,110	14,250	3,6	0,4	**PHS 35-2TB80**
		96	296,67	291,08	B	1610	12,70	41,28	25,40	92,08	4,110	14,250	4,5	0,4	**PHS 35-2TB96**
		112	345,19	339,60	B	1610	12,70	41,28	25,40	92,08	4,110	14,250	4,9	0,4	**PHS 35-2TB112**
12,70	1/2	**15**	67,31	60,96	A	1008	9,53	25,40	22,23	32,15	6,990	21,360	0,2	0,1	**PHS 40-2TBH15**
		16	71,37	65,02	A	1008	9,53	25,40	22,23	32,15	6,990	21,360	0,3	0,1	**PHS 40-2TBH16**
		17	75,69	69,09	A	1008	9,53	25,40	22,23	32,15	6,990	21,360	0,3	0,1	**PHS 40-2TBH17**
		18	79,50	73,15	B	1210	15,88	31,75	25,40	58,74	6,990	21,360	0,3	0,3	**PHS 40-2TBH18**
		19	83,82	77,22	B	1210	15,88	31,75	25,40	63,50	6,990	21,360	0,4	0,3	**PHS 40-2TBH19**
		20	87,88	81,28	B	1610	12,70	41,28	25,40	66,68	6,990	21,360	0,4	0,4	**PHS 40-2TBH20**
		21	91,95	85,34	B	1610	12,70	41,28	25,40	69,85	6,990	21,360	0,5	0,4	**PHS 40-2TBH21**
		23	100,08	93,22	B	1610	12,70	41,28	25,40	76,20	6,990	21,360	0,6	0,4	**PHS 40-2TBH23**
		25	108,20	101,35	B	2012	19,05	50,80	31,75	86,52	6,990	21,360	0,7	0,8	**PHS 40-2TBH25**
		30	128,52	121,41	B	2012	19,05	50,80	31,75	107,55	6,990	21,360	1,5	0,8	**PHS 40-2TB30**
		36	152,65	145,80	B	2012	19,05	50,80	31,75	130,97	6,990	21,360	2,7	0,8	**PHS 40-2TB36**
		42	177,04	169,93	C	2517	19,05	63,50	44,45	107,95	6,990	21,360	3,2	1,6	**PHS 40-2TB42**
		48	201,42	194,06	C	2517	19,05	63,50	44,45	107,95	6,990	21,360	4,4	1,6	**PHS 40-2TB48**
		52	217,68	210,31	C	2517	19,05	63,50	44,45	107,95	6,990	21,360	5,2	1,6	**PHS 40-2TB52**
		60	249,94	242,57	C	2517	19,05	63,50	44,45	107,95	6,990	21,360	7,0	1,6	**PHS 40-2TB60**
		68	282,45	275,08	C	2517	19,05	63,50	44,45	107,95	6,990	21,360	9,3	1,6	**PHS 40-2TB68**
		76	314,71	307,34	C	2517	19,05	63,50	44,45	107,95	6,990	21,360	11,7	1,6	**PHS 40-2TB76**
		84	346,96	339,60	C	2517	19,05	63,50	44,45	107,95	6,990	21,360	14,3	1,6	**PHS 40-2TB84**
		95	391,41	384,05	C	2517	19,05	63,50	44,45	107,95	6,990	21,360	15,5	1,6	**PHS 40-2TB95**
		102	419,86	412,50	C	2517	19,05	63,50	44,45	107,95	6,990	21,360	16,7	1,6	**PHS 40-2TB102**
15,88	5/8	**14**	78,99	71,37	A	1008	9,53	25,40	22,23	–	8,430	26,540	0,4	0,1	**PHS 50-2TBH14**
		15	84,07	76,45	A	1210	15,88	31,75	25,40	–	8,430	26,540	0,4	0,3	**PHS 50-2TBH15**
		16	89,41	81,28	A	1210	15,88	31,75	25,40	–	8,430	26,540	0,5	0,3	**PHS 50-2TBH16**
		17	94,49	86,61	A	1610	12,70	41,28	25,40	–	8,430	26,540	0,5	0,3	**PHS 50-2TBH17**
		18	99,57	91,44	A	1610	12,70	41,28	25,40	–	8,430	26,540	0,6	0,4	**PHS 50-2TBH18**
		19	104,65	96,52	A	1610	12,70	41,28	25,40	–	8,430	26,540	0,7	0,4	**PHS 50-2TBH19**
		20	109,73	101,60	B	2012	19,05	50,80	31,75	82,55	8,430	26,540	0,7	0,8	**PHS 50-2TBH20**
		21	114,81	106,43	B	2012	19,05	50,80	31,75	88,90	8,430	26,540	0,9	0,8	**PHS 50-2TBH21**
		25	135,13	126,75	B	2012	19,05	50,80	31,75	108,74	8,430	26,540	1,7	0,8	**PHS 50-2TBH25**
		30	160,53	151,89	B	2517	19,05	63,50	44,45	134,14	8,430	26,540	3,4	1,6	**PHS 50-2TB30**
		36	191,01	182,12	C	2517	19,05	63,50	44,45	107,95	8,430	26,540	4,3	1,6	**PHS 50-2TB36**
		42	221,23	212,34	C	2517	19,05	63,50	44,45	107,95	8,430	26,540	6,1	1,6	**PHS 50-2TB42**
		48	251,71	242,82	C	2517	19,05	63,50	44,45	107,95	8,430	26,540	8,4	1,6	**PHS 50-2TB48**
		52	272,03	262,89	C	2517	19,05	63,50	44,45	111,13	8,430	26,540	10,1	1,6	**PHS 50-2TB52**
		60	312,42	303,28	C	2517	19,05	63,50	44,45	111,13	8,430	26,540	13,7	1,6	**PHS 50-2TB60**

All Type B or C sprockets, up to and including 25 tooth, are with hardened teeth as standard.
For any additional size sprockets with hardened teeth, add "H" before the number of teeth, e.g. PHS 35-2TBH19.

ANSI sprockets, duplex, taper bushed

ANSI 50-2 · 15,88 mm (5/8") pitch | ANSI 60-2 · 19,05 mm (3/4") pitch | ANSI 80-2 · 25,40 mm (1") pitch

Pitch		Number of teeth	Diameters Outside	Pitch	Type	Bushing number	Dimensions Bore				Plate thickness		Mass Rim	Bushing	Designation
			OD	PD			Min.	Max.	L	H	t_1	t_2			
mm	in.	–	mm		–	–	mm						kg		–
15,88	5/8	**68**	352,81	343,66	C	2517	19,05	63,50	44,45	111,13	8,430	26,540	17,9	1,6	**PHS 50-2TB68**
		76	393,45	384,05	C	2517	19,05	63,50	44,45	111,13	8,430	26,540	18,7	1,6	**PHS 50-2TB76**
		84	433,83	424,43	C	2517	19,05	63,50	44,45	111,13	8,430	26,540	20,6	1,6	**PHS 50-2TB84**
		95	489,46	480,06	C	2517	19,05	63,50	44,45	111,13	8,430	26,540	26,7	1,6	**PHS 50-2TB95**
		102	524,76	515,62	C	2517	19,05	63,50	44,45	111,13	8,430	26,540	30,4	1,6	**PHS 50-2TB102**
19,05	3/4	**13**	88,65	79,50	B	1215	15,88	31,75	38,10	57,15	11,280	34,060	0,5	0,7	**PHS 60-2TBH13**
		14	95,00	85,60	B	1215	15,88	31,75	38,10	63,50	11,280	34,060	0,7	0,8	**PHS 60-2TBH14**
		15	101,09	91,69	B	1615	12,70	41,28	38,10	71,44	11,280	34,060	0,6	0,8	**PHS 60-2TBH15**
		16	107,19	97,54	B	1615	12,70	41,28	38,10	76,20	11,280	34,060	1,0	1,0	**PHS 60-2TBH16**
		17	113,28	103,63	B	1615	12,70	41,28	38,10	82,55	11,280	34,060	1,1	1,3	**PHS 60-2TBH17**
		18	119,38	109,73	A	2012	19,05	50,80	31,75	–	11,280	34,060	1,4	1,1	**PHS 60-2TBH18**
		19	125,73	115,82	A	2012	19,05	50,80	31,75	–	11,280	34,060	1,6	1,3	**PHS 60-2TBH19**
		20	131,57	121,67	B	2517	19,05	38,10	44,45	100,41	11,280	34,060	1,8	1,3	**PHS 60-2TBH20**
		21	137,92	127,76	B	2517	19,05	38,10	44,45	106,36	11,280	34,060	2,3	1,7	**PHS 60-2TBH21**
		25	162,31	126,49	B	2517	19,05	38,10	44,45	130,97	11,280	34,060	3,4	3,4	**PHS 60-2TBH25**
		30	192,79	182,12	B	2517	19,05	38,10	44,45	161,13	11,280	34,060	6,1	6,0	**PHS 60-2TB30**
		36	229,11	218,69	C	2517	19,05	38,10	44,45	107,95	11,280	34,060	7,9	7,9	**PHS 60-2TB36**
		42	265,68	255,02	C	2517	19,05	38,10	44,45	107,95	11,280	34,060	11,6	11,3	**PHS 60-2TB42**
		45	283,97	273,05	C	2517	19,05	38,10	44,45	107,95	11,280	34,060	13,4	13,3	**PHS 60-2TB45**
		52	326,39	315,47	C	2517	19,05	38,10	44,45	107,95	11,280	34,060	18,6	18,3	**PHS 60-2TB52**
		60	374,90	363,98	C1	2517	19,05	38,10	44,45	107,95	11,280	34,060	14,7	15,2	**PHS 60-2TB60**
		68	423,42	412,50	C1	2517	19,05	38,10	44,45	114,30	11,280	34,060	16,6	19,6	**PHS 60-2TB68**
		76	471,93	461,01	C1	3020	31,75	76,20	50,80	133,35	11,280	34,060	19,3	21,7	**PHS 60-2TB76**
		95	587,25	576,07	C1	3020	31,75	76,20	50,80	133,35	11,280	34,060	22,0	31,7	**PHS 60-2TB95**
25,40	1	**13**	118,36	106,17	A	1615	12,70	41,28	38,10	–	14,150	43,430	1,5	0,5	**PHS 80-2TBH13**
		14	126,49	114,05	A	2012	19,05	50,80	31,75	–	14,150	43,430	1,6	0,8	**PHS 80-2TBH14**
		15	134,62	122,17	A	2012	19,05	50,80	31,75	–	14,150	43,430	2,0	0,8	**PHS 80-2TBH15**
		16	143,00	130,30	A	2517	19,05	63,50	44,45	79,38	14,150	43,430	1,7	1,6	**PHS 80-2TBH16**
		17	151,13	138,18	A	2517	19,05	63,50	44,45	79,38	14,150	43,430	2,3	1,6	**PHS 80-2TBH17**
		18	159,26	146,30	A	2517	19,05	63,50	44,45	79,38	14,150	43,430	2,9	1,6	**PHS 80-2TBH18**
		19	167,39	154,43	B	3020	31,75	76,20	50,80	127,00	14,150	43,430	2,5	3,0	**PHS 80-2TBH19**
		20	175,51	162,31	B	3020	31,75	76,20	50,80	133,35	14,150	43,430	3,2	3,0	**PHS 80-2TBH20**
		21	183,90	170,43	B	3020	31,75	76,20	50,80	141,29	14,150	43,430	4,0	3,0	**PHS 80-2TBH21**
		25	216,41	202,69	B	3020	31,75	76,20	50,80	174,63	14,150	43,430	7,5	3,0	**PHS 80-2TBH25**
		30	256,79	243,08	C	3020	31,75	76,20	50,80	133,35	14,150	43,430	11,4	3,0	**PHS 80-2TB30**
		36	305,56	291,34	C	3020	31,75	76,20	50,80	133,35	14,150	43,430	17,9	3,0	**PHS 80-2TB36**
		42	354,08	340,11	C	3020	31,75	76,20	50,80	133,35	14,150	43,430	16,5	3,0	**PHS 80-2TB42**
		45	378,46	364,24	C1	3020	31,75	76,20	50,80	133,35	14,150	43,430	18,8	3,0	**PHS 80-2TB45**
		52	435,10	420,62	C1	3020	31,75	76,20	50,80	133,35	14,150	43,430	25,5	3,0	**PHS 80-2TB52**
		60	499,87	485,39	C1	3020	31,75	76,20	50,80	133,35	14,150	43,430	30,1	3,0	**PHS 80-2TB60**
		68	564,64	549,91	C1	3020	31,75	76,20	50,80	133,35	14,150	43,430	32,7	3,0	**PHS 80-2TB68**
		76	629,41	614,68	C1	3020	31,75	76,20	50,80	133,35	14,150	43,430	40,4	3,0	**PHS 80-2TB76**
		95	783,08	768,35	C1	3020	31,75	76,20	50,80	133,35	14,150	43,430	50,8	3,0	**PHS 80-2TB95**

All Type B or C sprockets, up to and including 25 tooth, are with hardened teeth as standard.
For any additional size sprockets with hardened teeth, add "H" before the number of teeth, e.g. PHS 35-2TBH19.

ANSI sprockets, triplex, pilot bore

ANSI 35-3 · 9,53 mm (3/8") pitch | ANSI 40-3 · 12,70 mm (1/2") pitch

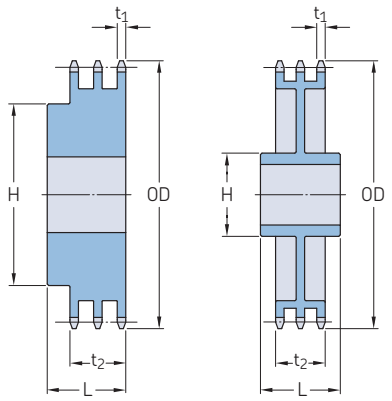

Type B Type C

Pitch		Number of teeth	Outside diameter	Type	Dimensions Bore				Plate thickness		Mass	Designation
			OD		Min.	Max.	H	L	t_1	t_2		
–	in.	–	mm	–	mm						kg	–
9,53	3/8	**13**	44,45	B	12,70	17,46	28,18	44,45	4,110	24,380	0,2	**PHS 35-3BH13**
		14	47,50	B	12,70	22,23	31,75	44,45	4,110	24,380	0,3	**PHS 35-3BH14**
		15	50,55	B	12,70	23,81	35,72	44,45	4,110	24,380	0,4	**PHS 35-3BH15**
		16	53,59	B	12,70	23,81	37,31	44,45	4,110	24,380	0,4	**PHS 35-3BH16**
		17	56,64	B	12,70	17,46	40,48	44,45	4,110	24,380	0,5	**PHS 35-3BH17**
		18	59,69	B	12,70	20,64	43,66	44,45	4,110	24,380	0,6	**PHS 35-3BH18**
		19	62,74	B	12,70	23,81	47,63	44,45	4,110	24,380	0,6	**PHS 35-3BH19**
		20	65,79	B	19,05	23,81	49,21	47,63	4,110	24,380	0,7	**PHS 35-3BH20**
		21	68,83	B	19,05	34,93	52,39	47,63	4,110	24,380	0,8	**PHS 35-3BH21**
		22	71,88	B	19,05	36,51	55,56	47,63	4,110	24,380	0,9	**PHS 35-3BH22**
		23	74,93	B	19,05	38,10	57,15	47,63	4,110	24,380	1,0	**PHS 35-3BH23**
		24	77,98	B	19,05	38,10	57,15	47,63	4,110	24,380	1,0	**PHS 35-3BH24**
		25	81,03	B	19,05	38,10	57,15	47,63	4,110	24,380	1,1	**PHS 35-3BH25**
		26	84,07	B	19,05	38,10	63,50	47,63	4,110	24,380	1,3	**PHS 35-3B26**
		30	96,27	B	19,05	44,45	63,50	47,63	4,110	24,380	1,6	**PHS 35-3B30**
		36	114,55	B	19,05	44,45	63,50	47,63	4,110	24,380	2,1	**PHS 35-3B36**
		42	132,84	B	19,05	44,45	63,50	47,63	4,110	24,380	2,7	**PHS 35-3B42**
		48	151,13	B	19,05	44,45	63,50	47,63	4,110	24,380	3,4	**PHS 35-3B48**
		52	163,32	B	19,05	44,45	63,50	47,63	4,110	24,380	3,9	**PHS 35-3B52**
		60	187,45	B	19,05	44,45	63,50	47,63	4,110	24,380	5,1	**PHS 35-3B60**
		68	211,84	B	19,05	60,33	88,90	47,63	4,110	24,380	7,0	**PHS 35-3B68**
		72	223,77	B	19,05	60,33	88,90	47,63	4,110	24,380	7,9	**PHS 35-3B72**
		76	235,97	B	19,05	60,33	88,90	47,63	4,110	24,380	8,6	**PHS 35-3B76**
		84	260,35	B	19,05	60,33	88,90	47,63	4,110	24,380	10,4	**PHS 35-3B84**
		95	293,62	B	25,40	63,50	95,25	53,98	4,110	24,380	13,3	**PHS 35-3B95**
		96	296,67	B	25,40	63,50	95,25	53,98	4,110	24,380	13,6	**PHS 35-3B96**
		102	314,96	B	25,40	63,50	95,25	53,98	4,110	24,380	15,1	**PHS 35-3B102**
12,70	1/2	**11**	50,80	B	12,70	19,05	36,51	53,98	6,990	35,740	0,4	**PHS 40-3BH11**
		12	55,12	B	12,70	23,81	39,69	53,98	6,990	35,740	0,5	**PHS 40-3BH12**
		13	59,18	B	12,70	25,40	38,10	53,98	6,990	35,740	0,6	**PHS 40-3BH13**
		14	63,25	B	12,70	28,58	42,86	53,98	6,990	35,740	0,7	**PHS 40-3BH14**
		15	67,31	B	12,70	31,75	46,04	53,98	6,990	35,740	0,8	**PHS 40-3BH15**
		16	71,37	B	15,88	34,93	50,80	53,98	6,990	35,740	0,9	**PHS 40-3BH16**
		17	75,69	B	15,88	36,51	53,98	53,98	6,990	35,740	1,1	**PHS 40-3BH17**
		18	79,76	B	15,88	38,10	58,74	53,98	6,990	35,740	1,2	**PHS 40-3BH18**
		19	83,82	B	15,88	44,45	63,50	53,98	6,990	35,740	1,4	**PHS 40-3BH19**
		20	87,88	B	15,88	47,63	66,68	57,15	6,990	35,740	1,7	**PHS 40-3BH20**
		21	91,95	B	15,88	47,63	69,85	57,15	6,990	35,740	1,8	**PHS 40-3BH21**
		22	96,01	B	15,88	47,63	73,03	57,15	6,990	35,740	2,1	**PHS 40-3BH22**
		23	100,08	B	15,88	50,80	76,20	57,15	6,990	35,740	2,3	**PHS 40-3BH23**
		24	104,14	B	15,88	57,15	82,55	57,15	6,990	35,740	2,6	**PHS 40-3BH24**
		25	108,20	B	15,88	57,15	82,55	57,15	6,990	35,740	2,7	**PHS 40-3BH25**
		26	112,27	B	15,88	57,15	82,55	57,15	6,990	35,740	2,9	**PHS 40-3B26**
		30	128,52	B	22,23	57,15	82,55	57,15	6,990	35,740	3,6	**PHS 40-3B30**
		35	148,84	B	22,23	57,15	82,55	57,15	6,990	35,740	4,7	**PHS 40-3B35**
		36	152,91	B	23,81	63,50	95,25	60,33	6,990	35,740	5,3	**PHS 40-3B36**
		42	177,04	B	23,81	63,50	95,25	60,33	6,990	35,740	7,0	**PHS 40-3B42**
		48	201,42	B	23,81	63,50	95,25	60,33	6,990	35,740	8,8	**PHS 40-3B48**
		52	217,68	B	23,81	63,50	95,25	60,33	6,990	35,740	10,2	**PHS 40-3B52**
		60	249,94	B	23,81	63,50	95,25	60,33	6,990	35,740	13,6	**PHS 40-3B60**
		68	282,45	B	30,16	69,85	101,60	66,68	6,990	35,740	17,4	**PHS 40-3B68**
		72	298,45	B	30,16	69,85	101,60	66,68	6,990	35,740	19,3	**PHS 40-3B72**
		76	314,71	B	30,16	69,85	101,60	66,68	6,990	35,740	21,3	**PHS 40-3B76**

Maximum bores can accommodate standard keyways. Larger bores are available where a shallow keyway is used or no keyway is required.
All Type B or C sprockets, up to and including 25 tooth, are with hardened teeth as standard.
For any additional size sprockets with hardened teeth, add "H" before the number of teeth, e.g. PHS 35-3BH13.

ANSI sprockets, triplex, pilot bore

ANSI 40-3 · 12,70 mm (1/2") pitch | ANSI 50-3 · 15,88 mm (5/8") pitch | ANSI 60-3 · 19,05 mm (3/4") pitch | ANSI 80-3 · 25,40 mm (1") pitch

Pitch		Number of teeth	Outside diameter	Type	Dimensions Bore				Plate thickness		Mass	Designation
			OD		Min.	Max.	H	L	t_1	t_2		
–	in.	–	mm	–	mm						kg	–
12,70	1/2	**84**	346,96	B	30,16	69,85	107,95	69,85	6,990	35,740	26,0	**PHS 40-3B84**
		95	391,41	B	30,16	69,85	107,95	69,85	6,990	35,740	28,2	**PHS 40-3B95**
		102	419,86	B	30,16	69,85	107,95	69,85	6,990	35,740	31,0	**PHS 40-3B102**
15,88	5/8	**11**	63,50	B	15,88	23,81	37,31	63,50	8,430	44,650	0,6	**PHS 50-3BH11**
		12	68,83	B	15,88	28,58	42,86	63,50	8,430	44,650	0,8	**PHS 50-3BH12**
		13	73,91	B	15,88	33,34	47,63	63,50	8,430	44,650	1,0	**PHS 50-3BH13**
		14	78,99	B	15,88	34,93	52,39	63,50	8,430	44,650	1,2	**PHS 50-3BH14**
		15	84,33	B	19,05	38,10	58,74	63,50	8,430	44,650	1,5	**PHS 50-3BH15**
		16	89,41	B	19,05	44,45	63,50	63,50	8,430	44,650	1,7	**PHS 50-3BH16**
		17	94,49	B	19,05	47,63	68,26	63,50	8,430	44,650	2,0	**PHS 50-3BH17**
		18	99,57	B	19,05	49,21	74,61	63,50	8,430	44,650	2,3	**PHS 50-3BH18**
		19	104,65	B	25,40	53,98	79,38	63,50	8,430	44,650	2,5	**PHS 50-3BH19**
		20	109,73	B	25,40	57,15	82,55	66,68	8,430	44,650	2,9	**PHS 50-3BH20**
		21	114,81	B	25,40	60,33	88,90	66,68	8,430	44,650	3,4	**PHS 50-3BH21**
		22	119,89	B	25,40	60,33	90,49	66,68	8,430	44,650	3,6	**PHS 50-3BH22**
		23	124,97	B	25,40	63,50	92,08	66,68	8,430	44,650	4,0	**PHS 50-3BH23**
		24	130,05	B	25,40	63,50	92,08	66,68	8,430	44,650	4,3	**PHS 50-3BH24**
		25	135,13	B	25,40	63,50	92,08	66,68	8,430	44,650	4,6	**PHS 50-3BH25**
		26	140,21	B	25,40	63,50	95,25	66,68	8,430	44,650	5,0	**PHS 50-3B26**
		30	160,53	B	25,40	63,50	95,25	66,68	8,430	44,650	6,5	**PHS 50-3B30**
		35	185,93	B	25,40	63,50	95,25	66,68	8,430	44,650	8,6	**PHS 50-3B35**
		36	191,01	B	30,16	69,85	101,60	69,85	8,430	44,650	9,3	**PHS 50-3B36**
		42	221,49	B	30,16	69,85	101,60	69,85	8,430	44,650	12,5	**PHS 50-3B42**
		48	251,71	B	30,16	69,85	101,60	79,38	8,430	44,650	16,6	**PHS 50-3B48**
		52	272,03	B	30,16	69,85	101,60	79,38	8,430	44,650	19,3	**PHS 50-3B52**
		60	312,42	B	33,34	76,20	114,30	79,38	8,430	44,650	25,8	**PHS 50-3B60**
		68	352,81	B	33,34	76,20	114,30	79,38	8,430	44,650	33,2	**PHS 50-3B68**
		72	373,13	C	33,34	76,20	120,65	88,90	8,430	44,650	24,7	**PHS 50-3C72**
		76	393,45	C	33,34	76,20	120,65	88,90	8,430	44,650	23,2	**PHS 50-3C76**
		84	433,83	C	33,34	76,20	120,65	88,90	8,430	44,650	29,6	**PHS 50-3C84**
		95	489,46	C	33,34	76,20	120,65	95,25	8,430	44,650	33,8	**PHS 50-3C95**
		102	524,76	C	33,34	76,20	120,65	95,25	8,430	44,650	36,3	**PHS 50-3C102**
19,05	3/4	**11**	76,20	B	25,40	31,75	46,04	76,20	11,280	56,850	1,1	**PHS 60-3BH11**
		12	82,55	B	25,40	36,51	53,98	76,20	11,280	56,850	1,5	**PHS 60-3BH12**
		13	88,65	B	25,40	38,10	57,15	76,20	11,280	56,850	1,8	**PHS 60-3BH13**
		14	95,00	B	25,40	44,45	63,50	76,20	11,280	56,850	2,0	**PHS 60-3BH14**
		15	101,09	B	25,40	47,63	71,44	76,20	11,280	56,850	2,5	**PHS 60-3BH15**
		16	107,19	B	25,40	50,80	76,20	76,20	11,280	56,850	3,0	**PHS 60-3BH16**
		17	113,28	B	25,40	57,15	82,55	76,20	11,280	56,850	3,5	**PHS 60-3BH17**
		18	119,38	B	25,40	60,33	88,90	76,20	11,280	56,850	3,9	**PHS 60-3BH18**
		19	125,73	B	25,40	63,50	93,66	76,20	11,280	56,850	4,5	**PHS 60-3BH19**
		20	131,83	B	25,40	63,50	95,25	76,20	11,280	56,850	5,1	**PHS 60-3BH20**
		21	137,92	B	25,40	69,85	104,78	76,20	11,280	56,850	5,7	**PHS 60-3BH21**
		22	144,02	B	25,40	69,85	107,95	76,20	11,280	56,850	6,0	**PHS 60-3BH22**
		23	150,11	B	25,40	69,85	107,95	76,20	11,280	56,850	6,6	**PHS 60-3BH23**
		24	156,21	B	25,40	69,85	107,95	76,20	11,280	56,850	7,2	**PHS 60-3BH24**
		25	162,31	B	25,40	69,85	107,95	76,20	11,280	56,850	7,7	**PHS 60-3BH25**
		26	168,40	B	25,40	69,85	107,95	76,20	11,280	56,850	8,4	**PHS 60-3B26**
		30	192,79	B	25,40	69,85	107,95	76,20	11,280	56,850	10,5	**PHS 60-3B30**
		35	223,01	B	31,75	76,20	114,30	82,55	11,280	56,850	15,7	**PHS 60-3B35**
		36	229,11	B	31,75	76,20	114,30	82,55	11,280	56,850	16,8	**PHS 60-3B36**
		42	265,68	B	31,75	82,55	120,65	92,08	11,280	56,850	22,2	**PHS 60-3B42**
		45	283,97	B	31,75	82,55	120,65	92,08	11,280	56,850	25,9	**PHS 60-3B45**
		52	326,39	C	31,75	82,55	120,65	88,90	11,280	56,850	33,1	**PHS 60-3C52**
		60	374,90	C	31,75	82,55	120,65	88,90	11,280	56,850	28,6	**PHS 60-3C60**
		68	423,42	C	31,75	82,55	127,00	88,90	11,280	56,850	33,1	**PHS 60-3C68**
		72	447,80	C	31,75	82,55	127,00	88,90	11,280	56,850	38,6	**PHS 60-3C72**
		76	471,93	C	38,10	95,25	139,70	88,90	11,280	56,850	37,2	**PHS 60-3C76**
		95	587,25	C	38,10	95,25	139,70	101,60	11,280	56,850	47,6	**PHS 60-3C95**
25,40	1	**11**	101,85	B	25,40	44,45	63,50	92,08	14,150	72,720	2,7	**PHS 80-3BH11**
		12	109,98	B	25,40	47,63	72,23	92,08	14,150	72,720	3,4	**PHS 80-3BH12**
		13	118,36	B	25,40	57,15	80,17	92,08	14,150	72,720	4,2	**PHS 80-3BH13**
		14	126,49	B	25,40	60,33	88,11	92,08	14,150	72,720	5,0	**PHS 80-3BH14**
		15	134,62	B	25,40	63,50	96,44	92,08	14,150	72,720	5,9	**PHS 80-3BH15**
		16	143,00	B	25,40	69,85	101,60	98,43	14,150	72,720	7,2	**PHS 80-3BH16**
		17	151,13	B	25,40	76,20	112,32	98,43	14,150	72,720	8,4	**PHS 80-3BH17**
		18	159,26	B	25,40	82,55	120,25	98,43	14,150	72,720	9,6	**PHS 80-3BH18**
		19	167,39	B	25,40	84,14	127,00	98,43	14,150	72,720	10,8	**PHS 80-3BH19**
		20	175,51	B	25,40	84,14	127,00	98,43	14,150	72,720	11,8	**PHS 80-3BH20**
		21	183,90	B	25,40	84,14	127,00	98,43	14,150	72,720	12,9	**PHS 80-3BH21**
		22	192,02	B	25,40	84,14	127,00	98,43	14,150	72,720	14,1	**PHS 80-3BH22**
		23	200,15	B	25,40	84,14	127,00	98,43	14,150	72,720	15,2	**PHS 80-3BH23**
		24	208,28	B	25,40	88,90	133,35	98,43	14,150	72,720	16,8	**PHS 80-3BH24**

Maximum bores can accommodate standard keyways. Larger bores are available where a shallow keyway is used or no keyway is required.
All Type B or C sprockets, up to and including 25 tooth, are with hardened teeth as standard.
For any additional size sprockets with hardened teeth, add "H" before the number of teeth, e.g. PHS 35-3BH13.

ANSI sprockets, triplex, pilot bore

ANSI 80-3 · 25,40 mm (1") pitch | ANSI 100-3 · 31,75 mm (1¼") pitch

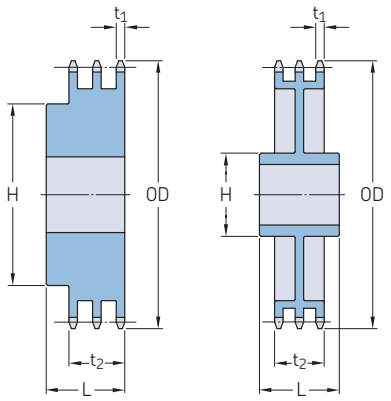

Type B Type C

Pitch		Number of teeth	Outside diameter	Type	Dimensions Bore				Plate thickness		Mass	Designation
			OD		Min.	Max.	H	L	t_1	t_2		
–	in.	–	mm	–	mm						kg	–
25,40	**1**	**25**	216,41	B	25,40	88,90	133,35	98,43	14,150	72,720	18,2	**PHS 80-3BH25**
		26	224,54	B	25,40	88,90	133,35	98,43	14,150	72,720	19,5	**PHS 80-3B26**
		30	256,79	B	31,75	95,25	146,05	107,95	14,150	72,720	24,7	**PHS 80-3B30**
		35	297,43	B	31,75	95,25	146,05	107,95	14,150	72,720	36,1	**PHS 80-3B35**
		36	305,56	B	31,75	95,25	146,05	107,95	14,150	72,720	38,1	**PHS 80-3B36**
		42	354,08	C	31,75	96,84	152,40	114,30	14,150	72,720	38,5	**PHS 80-3C42**
		45	378,46	C	31,75	96,84	152,40	114,30	14,150	72,720	41,9	**PHS 80-3C45**
		52	435,10	C	38,10	96,84	152,40	114,30	14,150	72,720	48,5	**PHS 80-3C52**
		60	499,87	C	38,10	107,95	158,75	120,65	14,150	72,720	58,1	**PHS 80-3C60**
		68	564,64	C	38,10	107,95	158,75	120,65	14,150	72,720	63,5	**PHS 80-3C68**
		76	629,41	C	38,10	107,95	158,75	120,65	14,150	72,720	74,8	**PHS 80-3C76**
		95	783,08	C	38,10	114,30	171,45	127,00	14,150	72,720	108,9	**PHS 80-3C95**
31,75	**1 ¼**	**11**	127,25	B	25,40	53,98	79,38	107,95	16,990	88,520	5,3	**PHS 100-3BH11**
		12	137,67	B	28,58	57,15	85,73	107,95	16,990	88,520	6,2	**PHS 100-3BH12**
		13	147,83	B	28,58	63,50	96,84	107,95	16,990	88,520	7,7	**PHS 100-3BH13**
		14	158,24	B	28,58	69,85	106,36	107,95	16,990	88,520	9,2	**PHS 100-3BH14**
		15	168,40	B	31,75	79,38	117,48	114,30	16,990	88,520	11,3	**PHS 100-3BH15**
		16	178,56	B	31,75	84,14	127,00	114,30	16,990	88,520	13,3	**PHS 100-3BH16**
		17	188,98	B	31,75	88,90	133,35	114,30	16,990	88,520	15,3	**PHS 100-3BH17**
		18	199,14	B	31,75	88,90	133,35	120,65	16,990	88,520	17,5	**PHS 100-3BH18**
		19	209,30	B	31,75	95,25	139,70	120,65	16,990	88,520	19,6	**PHS 100-3BH19**
		20	219,46	B	31,75	95,25	139,70	120,65	16,990	88,520	21,7	**PHS 100-3BH20**
		21	229,62	B	31,75	95,25	139,70	120,65	16,990	88,520	23,7	**PHS 100-3BH21**
		22	239,78	B	31,75	95,25	139,70	120,65	16,990	88,520	26,1	**PHS 100-3BH22**
		23	249,94	B	31,75	95,25	139,70	120,65	16,990	88,520	28,4	**PHS 100-3BH23**
		24	260,35	B	31,75	95,25	146,05	120,65	16,990	88,520	31,3	**PHS 100-3BH24**
		25	270,51	B	31,75	95,25	146,05	120,65	16,990	88,520	33,1	**PHS 100-3BH25**
		26	280,67	B	38,10	96,84	146,05	120,65	16,990	88,520	35,8	**PHS 100-3B26**
		30	321,06	B	38,10	96,84	146,05	120,65	16,990	88,520	46,7	**PHS 100-3B30**
		35	371,86	C	38,10	101,60	152,40	127,00	16,990	88,520	49,0	**PHS 100-3C35**
		45	473,20	C	38,10	101,60	152,40	127,00	16,990	88,520	64,9	**PHS 100-3C45**
		60	624,84	C	38,10	136,53	190,50	127,00	16,990	88,520	98,4	**PHS 100-3C60**
		70	725,93	C	38,10	136,53	190,50	127,00	16,990	88,520	118,8	**PHS 100-3C70**
		80	827,28	C	38,10	136,53	190,50	127,00	16,990	88,520	142,0	**PHS 100-3C80**

Maximum bores can accommodate standard keyways. Larger bores are available where a shallow keyway is used or no keyway is required.
All Type B or C sprockets, up to and including 25 tooth, are with hardened teeth as standard.
For any additional size sprockets with hardened teeth, add "H" before the number of teeth, e.g. PHS 35-3BH13.

Page intentionally left blank

SKF
SKF
SKF
SKF

Pulleys

Wedge belt pulleys 242

Classical V-belt pulleys 256

QD Classical V-belt pulleys 264

Narrow wedge belt pulleys 273

QD Narrow wedge belt pulleys 280

HiTD pulleys 289

Classical timing pulleys 301

Metric timing pulleys 313

SKF Pulleys

SKF pulley range nomenclature has a defined prefix of PHP. All pulleys are made to be applied to standardized belts. SKF pulleys conform to conventional basic belt part number format – ISO, BS, or DIN.

Pulleys – V-belts

The pulley range designation from SKF has the following is an example to indicate set up.

SKF Designation prefix

PHP 4 SPB 800 TB 5040

Groove number
The number of grooves on the pulley

Belt type
Belt section being applied to the pulley
Conforms with standards for dimensions for groove profile

Pulley diameter
Pitch circle pulley dimension
Wedge belt pulley – millimetres (mm)
Classical and Narrow wedge – 1/10 inch

Shaft fixing type
Taper bushing – TB standard catalogue taper bush applied
QD – designation of bushing series e.g. M
Rough stock bore – RSB

Supplementary
Possible other options and special requirements
Non standard bushing size – e.g 5040
Bore to size – X125MM

Pulleys (PHP Product Group)

Classical and trapezoidal inch pitch timing pulleys (MXL, XL, L, H, XH, XXH) are manufactured according to ISO 5294.

Metric pitch series timing pulleys (T/AT) are manufactured according to DIN 7721.

All SKF V-belt pulleys are manufactured to the standards ISO 4183, DIN 2211, ANSI Narrow V-belt pulley IP-22 and the ANSI Classical V-belt pulley IP-20. They are interchangeable with type SPA, SPB, SPC and SPZ. The pulleys are made from cast iron G3000 (GG) to American standard "SAEJ431AVG96".

Following are the requirements of G3000:
- Tensile strength = 207Mpa
- Hardness = HB 187-241
- Chemical composition C 3,1-3,4 %, Si 1,9-2,3 %, Mn 0,6-0,9 %, S = 0,15 %, P = 0,15%

After being machined, pulleys are phosphated and treated with a rustproof oil.

All pulleys are statically balanced to G6.3 according to ISO 1940. After balanced the pulleys are suitable for the linear speed of not more than 35m/s. Two Plane (Dynamic) balancing can be provided on request. SKF can issue a certificate stating that all pulleys are dynamically balanced in case of any special customer request.

Standard pulley groove dimensions DIN2211/1 & BS3970

Classical V-belt pulleys | Narrow Wedge V-belt pulleys (DIN / BS / ISO) | Narrow wedge belt pulleys (RMA)

Nomenclature:

- α Pulley groove included angle (°)
- OD Outside diameter
- PD Effective (pitch) diameter
- b_d Effective width at pitch line
- b_1 Groove top width
- c Distance from pitch to outside diameter (= OD - PD/2)
- e Transverse pitch of grooves (to centers)
- f Minimum recommended distance from edge of pulley to centre of first groove
- t Total groove depth

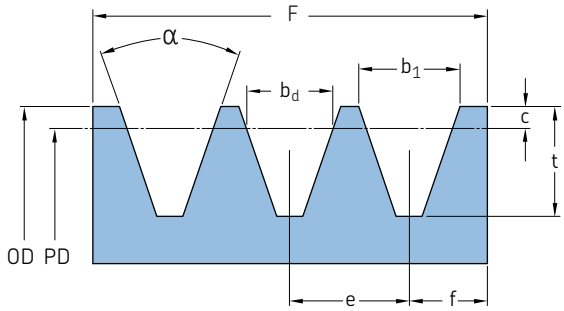

Classical V-belt pulleys

Classical belt series	Pitch diameter range	Groove angle	Dimensions				
		α	b_1	b_d	t	c	e
–	mm	°	mm				
13/A-17/B	85 - 170	34	15,55	15,88	19,05	4,45	12,70
	Over 170	38		15,88	19,05	4,45	12,70
22/C	178 - 203	34	22,33	19,81	25,40	5,08	17,48
	203 - 305	36	22,53	19,81	25,40	5,08	17,48
	Over 305	38	22,73	19,81	25,40	5,08	17,48
32/D	305 - 330	34	31,98	26,67	36,53	7,62	22,23
	330 - 432	36	32,28	26,67	36,53	7,62	22,23
	Over 432	38	32,59	26,67	36,53	7,62	22,23
40/E	457 - 610	36	38,79	33,02	44,45	10,16	31,24
	Over 610	38	39,17	33,02	44,45	10,16	31,24

Narrow Wedge V-belt pulleys (DIN / BS / ISO)

Classical belt series	Pitch diameter range	Groove angle	Dimensions					
		α	b_1	b_d	t(+0,6/-0,0))	c	e	f
–	mm	°	mm					
SPZ	Up to & incl. 80	34	9,7	8,5	11,00	2,00	12,0 ± 0,3	8,0
	Over 80	38	9,7	8,5	11,00	2,00	12,0 ± 0,3	8,0
SPA	Up to & incl. 118	34	12,7	11,0	14,00	2,80	15,0 ± 0,3	10,0
	Over 118	38	12,7	11,0	14,00	2,80	15,0 ± 0,3	10,0
SPB	Up to & incl. 190	34	16,2	14,4	18,00	3,50	19,0 ± 0,4	12,5
	Over 190	38	16,2	14,4	18,00	3,50	19,0 ± 0,4	12,5
SPC	Up to & incl. 315	34	22,0	19,0	24,00	4,80	25,5 ± 0,5	17,0
	Over 315	38	22,0	19,0	24,00	4,80	25,5 ± 0,5	17,0

Narrow wedge belt pulleys (RMA)

RMA Belt series	Pitch diameter range	Groove angle	Dimensions					
		α	b_1	b_d	t	c	e	f
–	mm	°	mm					
3V, 3VX	Up to & incl. 90	36	8,89	8,89	8,64	0,64	10,3 ± 0,4	8,74
	Over 90 - 150	38	8,89	8,89	8,64	0,64	10,3 ± 0,4	8,74
	Over150 - 305	40	8,89	8,89	8,64	0,64	10,3 ± 0,4	8,74
	Over 305	42	8,89	8,89	8,64	0,64	10,3 ± 0,4	8,74
5V, 5VX	Over 140 - 255	38	15,24	12,70	14,98	1,27	17,5 ± 0,4	3,20
	Over 255 - 405	40	15,24	12,70	14,98	1,27	17,5 ± 0,4	3,20
	Over 405	42	15,24	12,70	14,98	1,27	17,5 ± 0,4	3,20
8V, 8VX	Over 315 - 405	38	25,40	25,40	25,15	2,54	28,6 ± 0,4	6,40
	Over 405 - 570	40	25,40	25,40	25,15	2,54	28,6 ± 0,4	6,40
	Over 570	42	25,40	25,40	25,15	2,54	28,6 ± 0,4	6,40

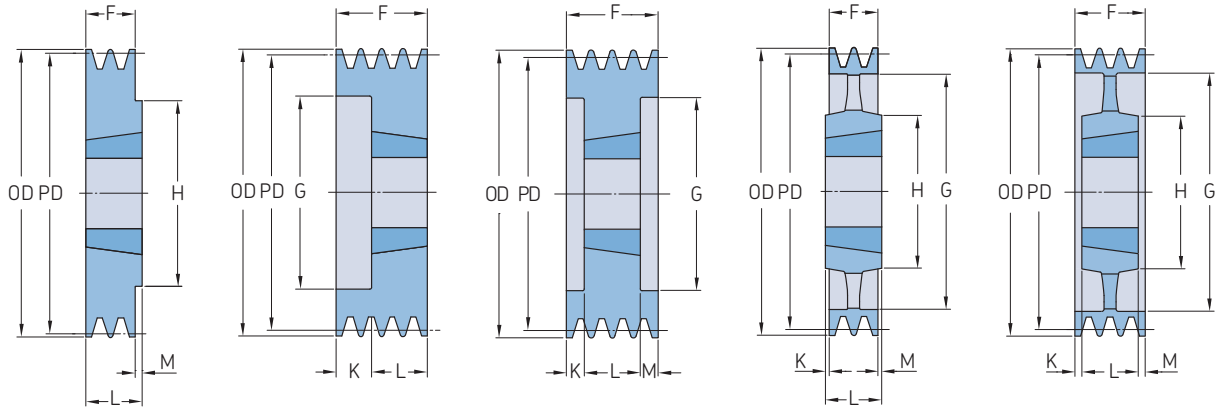

Section	Number of grooves	Pitch diameter PD	Pulley type	Bushing number	Dimensions Outer diameter OD	B Min.	B Max.	F	G	K	L	M	H	Mass*	Designation
–	–	mm	–	–	mm									kg	–
SPZ	**1**	50	9	1008	54,0	9	25	37	28	12,0	22	–	–	0,3	**PHP 1SPZ50TB**
		56	9	1008	60,0	9	25	37	23	12,0	22	–	–	0,5	**PHP 1SPZ56TB**
		60	1	1008	64,0	9	25	22	–	–	22	–	–	0,3	**PHP 1SPZ60TB**
		63	1	1108	67,0	9	28	16	–	–	22	6,0	62	0,3	**PHP 1SPZ63TB**
		67	1	1108	71,0	9	28	16	–	–	22	6,0	62	0,3	**PHP 1SPZ67TB**
		71	1	1108	75,0	9	28	16	–	–	22	6,0	62	0,4	**PHP 1SPZ71TB**
		75	1	1108	79,0	9	28	16	–	–	22	6,0	62	0,4	**PHP 1SPZ75TB**
		80	1	1210	84,0	11	32	16	–	–	25	9,0	75	0,5	**PHP 1SPZ80TB**
		85	1	1210	89,0	11	32	16	–	–	25	9,0	75	0,7	**PHP 1SPZ85TB**
		90	1	1210	94,0	11	32	16	–	–	25	9,0	75	0,7	**PHP 1SPZ90TB**
		95	1	1210	99,0	11	32	16	–	–	25	9,0	75	0,8	**PHP 1SPZ95TB**
		100	1	1210	104,0	11	32	16	–	–	25	9,0	75	0,9	**PHP 1SPZ100TB**
		106	1	1610	110,0	14	42	16	–	–	25	9,0	80	1,0	**PHP 1SPZ106TB**
		112	1	1610	116,0	14	42	16	–	–	25	9,0	80	1,1	**PHP 1SPZ112TB**
		118	1	1610	122,0	14	42	16	–	–	25	9,0	80	1,2	**PHP 1SPZ118TB**
		125	1	1610	129,0	14	42	16	–	–	25	9,0	80	1,3	**PHP 1SPZ125TB**
		132	1	1610	136,0	14	42	16	–	–	25	9,0	80	1,5	**PHP 1SPZ132TB**
		140	1	1610	144,0	14	42	16	–	–	25	9,0	80	1,7	**PHP 1SPZ140TB**
		150	1	1610	154,0	14	42	16	–	–	25	9,0	80	2,0	**PHP 1SPZ150TB**
		160	1	1610	164,0	14	42	16	–	–	25	9,0	80	2,2	**PHP 1SPZ160TB**
		170	1	1610	174,0	14	42	16	–	–	25	9,0	80	2,2	**PHP 1SPZ170TB**
		180	4	1610	184,0	14	42	16	152	–	25	9,0	92	2,1	**PHP 1SPZ180TB**
		190	4	1610	194,0	14	42	16	161	–	25	9,0	92	2,7	**PHP 1SPZ190TB**
		200	4	2012	204,0	14	50	16	172	–	32	16,0	100	3,4	**PHP 1SPZ200TB**
		224	4	2012	228,0	14	50	16	196	–	32	16,0	100	3,6	**PHP 1SPZ224TB**
		250	4	2012	254,0	14	50	16	222	8,0	32	8,0	100	4,6	**PHP 1SPZ250TB**
		280	4	2012	284,0	14	50	16	252	8,0	32	8,0	100	5,5	**PHP 1SPZ280TB**
		315	4	2012	319,0	14	50	16	287	8,0	32	8,0	100	6,7	**PHP 1SPZ315TB**
		355	4	2012	359,0	14	50	16	326	8,0	32	8,0	112	6,8	**PHP 1SPZ355TB**
		400	4	2012	404,0	14	50	16	371	8,0	32	8,0	112	6,9	**PHP 1SPZ400TB**
		450	4	2517	454,0	16	60	16	421	14,5	45	14,5	120	7,2	**PHP 1SPZ450TB**
SPZ	**2**	50	9	1008	54,0	9	25	49	28	25,0	22	–	–	0,4	**PHP 2SPZ50TB**
		56	9	1008	60,0	9	25	49	35	27,0	22	–	–	0,5	**PHP 2SPZ56TB**
		60	9	1108	64,0	9	25	49	36	27,0	22	–	–	0,7	**PHP 2SPZ60TB**
		63	6	1108	67,0	9	28	28	40	6,0	22	–	–	0,3	**PHP 2SPZ63TB**
		67	6	1108	71,0	9	28	28	42	6,0	22	–	–	0,4	**PHP 2SPZ67TB**
		71	6	1108	75,0	9	28	28	42	6,0	22	–	–	0,5	**PHP 2SPZ71TB**
		75	6	1210	79,0	11	32	28	51	3,0	25	–	–	0,5	**PHP 2SPZ75TB**
		80	6	1210	84,0	11	32	28	51	3,0	25	–	–	0,6	**PHP 2SPZ80TB**
		85	6	1610	89,0	14	42	28	60	3,0	25	–	–	0,6	**PHP 2SPZ85TB**
		90	6	1610	94,0	14	42	28	61	3,0	25	–	–	0,7	**PHP 2SPZ90TB**
		95	6	1610	99,0	14	42	28	66	3,0	25	–	–	0,8	**PHP 2SPZ95TB**
		100	6	1610	104,0	14	42	28	71	3,0	25	–	–	0,9	**PHP 2SPZ100TB**
		106	6	1610	110,0	14	42	28	76	3,0	25	–	–	1,1	**PHP 2SPZ106TB**
		112	6	1610	116,0	14	42	28	84	3,0	25	–	–	1,3	**PHP 2SPZ112TB**
		118	6	1610	122,0	14	42	28	90	3,0	25	–	–	1,5	**PHP 2SPZ118TB**
		125	6	1610	129,0	14	42	28	97	3,0	25	–	–	1,7	**PHP 2SPZ125TB**
		132	6	1610	136,0	14	42	28	104	3,0	25	–	–	2,0	**PHP 2SPZ132TB**
		140	6	1610	144,0	14	42	28	112	3,0	25	–	–	2,4	**PHP 2SPZ140TB**
		150	1	2012	154,0	14	50	28	–	–	32	4,0	100	2,6	**PHP 2SPZ150TB**
		160	1	2012	164,0	14	50	28	–	–	32	4,0	100	3,1	**PHP 2SPZ160TB**
		170	1	2012	174,0	14	50	28	–	–	32	4,0	100	2,8	**PHP 2SPZ170TB**
		180	8	2012	184,0	14	50	28	152	–	32	4,0	100	2,9	**PHP 2SPZ180TB**

* Mass does not include bushings.
Non-functional dimensions may vary slightly.

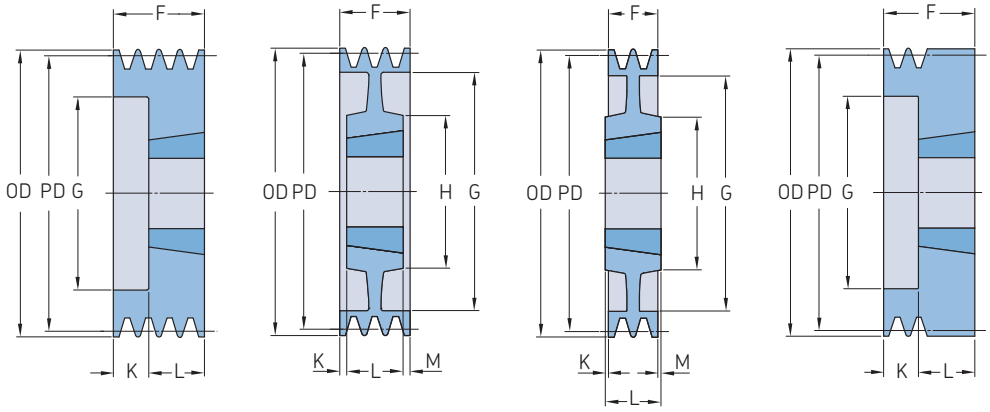

Type 6 Type 7 Type 8 Type 9

Section	Number of grooves	Pitch diameter PD	Pulley type	Bushing number	Dimensions Outer diameter OD	B Min.	Max.	F	G	K	L	M	H	Mass*	Designation
–	–	mm	–	–	mm									kg	–
SPZ	**2**	190	8	2012	194,0	14	50	28	161	–	32	4,0	100	3,1	**PHP 2SPZ190TB**
		200	4	2012	204,0	14	50	28	171	–	32	4,0	100	3,4	**PHP 2SPZ200TB**
		224	4	2012	228,0	14	50	28	196	–	32	4,0	100	4,5	**PHP 2SPZ224TB**
		250	4	2012	254,0	14	50	28	222	2,0	32	2,0	100	5,4	**PHP 2SPZ250TB**
		280	4	2012	284,0	14	50	28	252	2,0	32	2,0	100	6,2	**PHP 2SPZ280TB**
		315	4	2012	319,0	14	50	28	286	2,0	32	2,0	100	7,2	**PHP 2SPZ315TB**
		355	4	2012	359,0	14	50	28	326	2,0	32	2,0	112	8,6	**PHP 2SPZ355TB**
		400	4	2517	404,0	16	60	28	371	8,5	45	8,5	120	9,9	**PHP 2SPZ400TB**
		450	4	2517	454,0	16	60	28	421	8,5	45	8,5	120	11,2	**PHP 2SPZ450TB**
SPZ	**3**	63	6	1108	67,0	9	28	40	40	18,0	22	–	–	0,4	**PHP 3SPZ63TB**
		67	6	1108	71,0	9	28	40	42	18,0	22	–	–	0,5	**PHP 3SPZ67TB**
		71	6	1108	75,0	9	28	40	42	18,0	22	–	–	0,6	**PHP 3SPZ71TB**
		75	6	1210	79,0	11	32	40	48	15,0	25	–	–	0,7	**PHP 3SPZ75TB**
		80	6	1210	84,0	11	32	40	51	15,0	25	–	–	0,7	**PHP 3SPZ80TB**
		85	6	1610	89,0	14	42	40	60	15,0	25	–	–	0,8	**PHP 3SPZ85TB**
		90	6	1610	94,0	14	42	40	61	15,0	25	–	–	0,9	**PHP 3SPZ90TB**
		95	6	1610	99,0	14	42	40	66	15,0	25	–	–	1,0	**PHP 3SPZ95TB**
		100	6	1610	104,0	14	42	40	71	15,0	25	–	–	1,1	**PHP 3SPZ100TB**
		106	6	1610	110,0	14	42	40	78	15,0	25	–	–	1,4	**PHP 3SPZ106TB**
		112	6	2012	116,0	14	50	40	84	8,0	32	–	–	1,4	**PHP 3SPZ112TB**
		118	6	2012	122,0	14	50	40	92	8,0	32	–	–	1,7	**PHP 3SPZ118TB**
		125	2	2012	129,0	14	50	40	97	–	32	8,0	–	2,0	**PHP 3SPZ125TB**
		132	2	2012	136,0	14	50	40	104	–	32	8,0	–	2,3	**PHP 3SPZ132TB**
		140	2	2012	144,0	14	50	40	112	–	32	8,0	–	2,7	**PHP 3SPZ140TB**
		150	2	2012	154,0	14	50	40	122	–	32	8,0	–	3,3	**PHP 3SPZ150TB**
		160	2	2012	164,0	14	50	40	132	–	32	8,0	–	3,9	**PHP 3SPZ160TB**
		170	3	2012	174,0	14	50	40	141	4,0	32	4,0	–	3,2	**PHP 3SPZ170TB**
		180	7	2012	184,0	14	50	40	152	–	32	8,0	100	3,4	**PHP 3SPZ180TB**
		190	7	2012	194,0	14	50	40	161	4,0	32	4,0	100	3,4	**PHP 3SPZ190TB**
		200	5	2012	204,0	14	50	40	172	4,0	32	4,0	100	3,9	**PHP 3SPZ200TB**
		224	5	2012	228,0	14	50	40	196	4,0	32	4,0	100	5,4	**PHP 3SPZ224TB**
		250	5	2012	254,0	14	50	40	222	4,0	32	4,0	100	6,4	**PHP 3SPZ250TB**
		280	4	2517	284,0	16	60	40	252	2,5	45	2,5	120	8,3	**PHP 3SPZ280TB**
		315	4	2517	319,0	16	60	40	287	2,5	45	2,5	120	10,1	**PHP 3SPZ315TB**
		355	4	2517	359,0	16	60	40	326	2,5	45	2,5	120	11,7	**PHP 3SPZ355TB**
		400	4	2517	404,0	16	60	40	371	2,5	45	2,5	120	13,3	**PHP 3SPZ400TB**
		450	4	2517	454,0	16	60	40	421	2,5	45	2,5	120	14,6	**PHP 3SPZ450TB**
		500	4	2517	504,0	16	60	40	471	2,5	45	2,5	120	15,8	**PHP 3SPZ500TB**
		630	4	3020	634,0	25	75	40	601	5,5	45	2,5	120	17,0	**PHP 3SPZ630TB**
		800	4	3020	804,0	25	75	40	771	5,5	51	2,5	150	33,0	**PHP 3SPZ800TB**
SPZ	**4**	63	6	1108	67,0	9	28	52	38	30,0	22	–	–	0,5	**PHP 4SPZ63TB**
		67	6	1108	71,0	9	28	52	41	30,0	22	–	–	0,6	**PHP 4SPZ67TB**
		71	6	1108	75,0	9	28	52	45	30,0	22	–	–	0,7	**PHP 4SPZ71TB**
		75	6	1210	79,0	11	32	52	46	27,0	25	–	–	0,8	**PHP 4SPZ75TB**
		80	6	1210	84,0	11	32	52	51	27,0	25	–	–	0,9	**PHP 4SPZ80TB**
		85	6	1610	89,0	14	42	52	60	27,0	25	–	–	1,0	**PHP 4SPZ85TB**
		90	6	1610	94,0	14	42	52	61	27,0	25	–	–	1,1	**PHP 4SPZ90TB**
		95	6	1610	99,0	14	42	52	66	27,0	25	–	–	1,3	**PHP 4SPZ95TB**
		100	6	1610	104,0	14	42	52	72	27,0	25	–	–	1,4	**PHP 4SPZ100TB**
		106	6	1610	110,0	14	42	52	80	27,0	25	–	–	1,6	**PHP 4SPZ106TB**
		112	6	2012	116,0	14	50	52	86	20,0	32	–	–	1,7	**PHP 4SPZ112TB**
		118	6	2012	122,0	14	50	52	92	20,0	32	–	–	2,0	**PHP 4SPZ118TB**
		125	2	2012	129,0	14	50	52	99	–	32	20,0	–	2,3	**PHP 4SPZ125TB**

* Mass does not include bushings.
Non-functional dimensions may vary slightly.

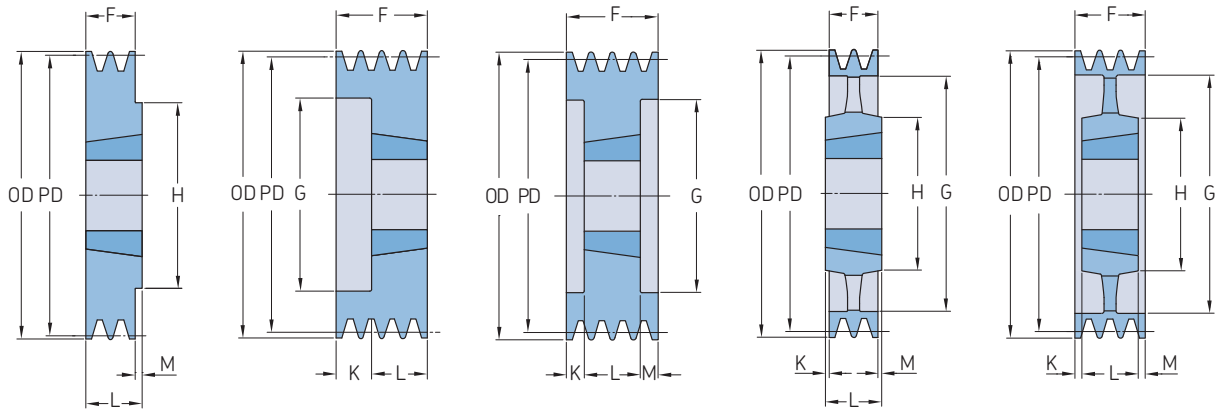

Section	Number of grooves	Pitch diameter PD	Pulley type	Bushing number	Dimensions Outer diameter OD	B Min.	B Max.	F	G	K	L	M	H	Mass*	Designation
–	–	mm	–	–	mm									kg	–
SPZ	**4**	132	2	2012	136,0	14	50	52	104	–	32	20,0	–	2,6	**PHP 4SPZ132TB**
		140	2	2012	144,0	14	50	52	112	–	32	20,0	–	3,1	**PHP 4SPZ140TB**
		150	2	2517	154,0	16	60	52	122	–	45	7,0	–	3,8	**PHP 4SPZ150TB**
		160	2	2517	164,0	16	60	52	132	–	45	7,0	–	4,6	**PHP 4SPZ160TB**
		170	2	2517	174,0	16	65	52	141	–	45	7,0	–	5,5	**PHP 4SPZ170TB**
		180	2	2517	184,0	16	60	52	152	–	45	7,0	–	6,3	**PHP 4SPZ180TB**
		190	3	2517	194,0	16	65	52	161	3,5	45	3,5	–	5,3	**PHP 4SPZ190TB**
		200	7	2517	204,0	16	60	52	172	3,5	45	3,5	120	5,4	**PHP 4SPZ200TB**
		224	5	2517	228,0	16	60	52	196	3,5	45	3,5	120	7,0	**PHP 4SPZ224TB**
		250	5	2517	254,0	16	60	52	222	3,5	45	3,5	120	8,0	**PHP 4SPZ250TB**
		280	5	2517	284,0	16	60	52	252	3,5	45	3,5	120	9,5	**PHP 4SPZ280TB**
		315	5	2517	319,0	16	60	52	287	3,5	45	3,5	120	12,1	**PHP 4SPZ315TB**
		355	5	2517	359,0	16	60	52	326	3,5	45	3,5	120	12,8	**PHP 4SPZ355TB**
		400	5	2517	404,0	16	60	52	371	3,5	45	3,5	120	13,6	**PHP 4SPZ400TB**
		450	5	3020	454,0	25	75	52	421	0,5	51	0,5	150	14,5	**PHP 4SPZ450TB**
		500	5	3020	504,0	25	75	52	471	0,5	51	0,5	150	17,3	**PHP 4SPZ500TB**
		630	4	3030	634,0	35	75	52	601	12,0	76	12,0	150	23,0	**PHP 4SPZ630TB**
		800	4	3030	804,0	35	75	52	771	12,0	76	12,0	150	36,0	**PHP 4SPZ800TB**
SPZ	**5**	85	6	1610	89,0	14	42	64	60	39,0	25	–	–	1,3	**PHP 5SPZ85TB**
		90	6	1610	94,0	14	42	64	61	39,0	25	–	–	1,3	**PHP 5SPZ90TB**
		95	6	1610	99,0	14	42	64	66	39,0	25	–	–	1,5	**PHP 5SPZ95TB**
		100	6	2012	104,0	14	50	64	72	32,0	32	–	–	1,6	**PHP 5SPZ100TB**
		106	6	2012	110,0	14	50	64	78	32,0	32	–	–	1,8	**PHP 5SPZ106TB**
		112	6	2012	116,0	14	50	64	84	32,0	32	–	–	2,0	**PHP 5SPZ112TB**
		118	6	2012	122,0	14	50	64	90	32,0	32	–	–	2,3	**PHP 5SPZ118TB**
		125	6	2012	129,0	14	50	64	97	32,0	32	–	–	2,7	**PHP 5SPZ125TB**
		132	6	2517	136,0	16	60	64	104	19,0	45	–	–	2,8	**PHP 5SPZ132TB**
		140	2	2517	144,0	16	60	64	112	–	45	19,0	–	3,4	**PHP 5SPZ140TB**
		150	2	2517	154,0	16	60	64	122	–	45	19,0	–	4,3	**PHP 5SPZ150TB**
		160	2	2517	164,0	16	60	64	132	–	45	19,0	–	5,1	**PHP 5SPZ160TB**
		170	2	2517	174,0	16	60	64	141	–	45	19,0	–	5,7	**PHP 5SPZ170TB**
		180	2	2517	184,0	16	60	64	152	–	45	19,0	–	6,8	**PHP 5SPZ180TB**
		190	3	2517	194,0	16	60	64	161	9,5	45	9,5	–	7,8	**PHP 5SPZ190TB**
		200	5	2517	204,0	16	60	64	172	9,5	45	9,5	–	8,8	**PHP 5SPZ200TB**
		224	5	2517	228,0	16	60	64	196	9,5	45	9,5	120	8,8	**PHP 5SPZ224TB**
		250	5	2517	254,0	16	60	64	222	9,5	45	9,5	120	9,0	**PHP 5SPZ250TB**
		280	5	2517	284,0	16	60	64	252	9,5	45	9,5	120	11,0	**PHP 5SPZ280TB**
		315	5	2517	319,0	16	60	64	287	9,5	45	9,5	120	13,3	**PHP 5SPZ315TB**
		355	5	2517	359,0	16	60	64	326	9,5	45	9,5	120	13,0	**PHP 5SPZ355TB**
		400	5	3020	404,0	25	75	64	371	6,5	51	6,5	150	15,6	**PHP 5SPZ400TB**
		450	5	3020	454,0	25	75	64	421	6,5	51	6,5	150	19,0	**PHP 5SPZ450TB**
		500	4	3030	504,0	35	75	64	471	6,0	51	6,0	150	22,6	**PHP 5SPZ500TB**
		630	4	3030	634,0	35	75	64	601	6,0	51	6,0	150	29,0	**PHP 5SPZ630TB**
		800	4	3535	804,0	35	90	64	771	12,5	89	12,5	170	44,1	**PHP 5SPZ800TB**
SPZ	**6**	85	6	1610	89,0	14	42	76	61	51,0	25	–	–	1,3	**PHP 6SPZ85TB**
		90	6	1610	94,0	14	42	76	61	51,0	25	–	–	1,5	**PHP 6SPZ90TB**
		95	6	1610	99,0	14	42	76	66	51,0	25	–	–	1,7	**PHP 6SPZ95TB**
		100	6	2012	104,0	14	50	76	72	44,0	32	–	–	1,9	**PHP 6SPZ100TB**
		106	6	2012	110,0	14	50	76	78	44,0	32	–	–	2,0	**PHP 6SPZ106TB**
		112	6	2012	116,0	14	50	76	84	44,0	32	–	–	2,3	**PHP 6SPZ112TB**
		118	6	2517	122,0	16	60	76	90	31,0	45	–	–	2,3	**PHP 6SPZ118TB**
		125	6	2517	129,0	16	60	76	97	31,0	45	–	–	2,7	**PHP 6SPZ125TB**
		132	6	2517	136,0	16	60	76	104	31,0	45	–	–	3,2	**PHP 6SPZ132TB**

* Mass does not include bushings.
Non-functional dimensions may vary slightly.

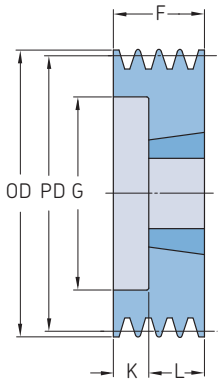

Type 6

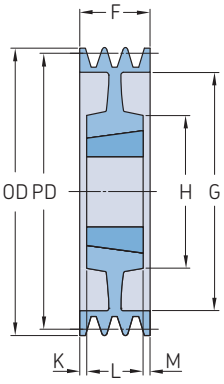

Type 7

Section	Number of grooves	Pitch diameter PD	Pulley type	Bushing number	Dimensions Outer diameter OD	B Min.	B Max.	F	G	K	L	M	H	Mass*	Designation
–	–	mm	–	–	mm									kg	–
SPZ	**6**	140	2	2517	144,0	16	60	76	112	–	45	31,0	–	3,8	**PHP 6SPZ140TB**
		150	2	2517	154,0	16	60	76	122	–	45	31,0	–	4,6	**PHP 6SPZ150TB**
		160	2	2517	164,0	16	60	76	132	–	45	31,0	–	5,5	**PHP 6SPZ160TB**
		170	2	2517	174,0	16	65	76	141	–	45	31,0	–	6,5	**PHP 6SPZ170TB**
		180	3	2517	184,0	16	60	76	152	15,5	45	15,5	–	7,3	**PHP 6SPZ180TB**
		190	3	2517	194,0	16	65	76	161	15,5	45	15,5	120	8,4	**PHP 6SPZ190TB**
		200	3	2517	204,0	16	60	76	172	15,5	45	15,5	120	9,4	**PHP 6SPZ200TB**
		224	5	2517	228,0	16	60	76	196	15,5	45	15,5	120	9,7	**PHP 6SPZ224TB**
		250	5	2517	254,0	16	60	76	222	15,5	45	15,5	120	11,8	**PHP 6SPZ250TB**
		280	5	2517	284,0	16	60	76	252	15,5	45	15,5	120	12,8	**PHP 6SPZ280TB**
		315	5	2517	319,0	16	60	76	287	15,5	45	15,5	120	13,8	**PHP 6SPZ315TB**
		355	5	2517	359,0	16	60	76	326	15,5	45	15,5	125	15,0	**PHP 6SPZ355TB**
		400	5	3030	404,0	25	75	76	371	–	76	–	150	18,3	**PHP 6SPZ400TB**
		450	5	3030	454,0	25	75	76	421	–	76	–	150	21,5	**PHP 6SPZ450TB**
		500	5	3030	504,0	25	75	76	471	–	76	–	150	24,6	**PHP 6SPZ500TB**
		630	4	3535	634,0	35	90	76	601	6,5	89	6,5	170	35,0	**PHP 6SPZ630TB**
		800	4	3535	804,0	35	90	76	771	6,5	89	6,5	170	57,9	**PHP 6SPZ800TB**
SPZ	**8**	140	3	2517	144,0	16	60	100	112	27,5	45	27,5	–	4,0	**PHP 8SPZ140TB**
		150	3	2517	154,0	16	60	100	122	27,5	45	27,5	–	5,1	**PHP 8SPZ150TB**
		160	3	2517	164,0	16	60	100	132	27,5	45	27,5	–	5,6	**PHP 8SPZ160TB**
		180	3	2517	184,0	16	60	100	152	27,5	45	27,5	–	7,1	**PHP 8SPZ180TB**
		200	3	3020	204,0	25	75	100	171	24,5	51	24,5	–	9,3	**PHP 8SPZ200TB**
		224	3	3020	228,0	25	75	100	195	24,5	51	24,5	–	11,8	**PHP 8SPZ224TB**
		250	5	3020	254,0	25	75	100	221	24,5	51	24,5	150	10,5	**PHP 8SPZ250TB**
		280	5	3020	284,0	25	75	100	252	24,5	51	24,5	150	10,8	**PHP 8SPZ280TB**
		355	5	3030	359,0	35	75	100	326	12,0	76	12,0	150	16,0	**PHP 8SPZ355TB**
		400	5	3030	404,0	35	75	100	371	12,0	76	12,0	150	18,2	**PHP 8SPZ400TB**
		450	5	3535	454,0	35	90	100	421	5,5	89	5,5	170	24,0	**PHP 8SPZ450TB**
SPA	**1**	63	1	1008	68,5	9	25	20	–	–	22	2,0	62	0,8	**PHP 1SPA63TB**
		67	1	1108	72,5	9	28	20	–	–	22	2,0	62	0,5	**PHP 1SPA67TB**
		71	1	1108	76,5	9	28	20	–	–	22	2,0	62	0,5	**PHP 1SPA71TB**
		75	1	1108	80,5	9	28	22	–	–	22	2,0	62	0,4	**PHP 1SPA75TB**
		80	1	1210	85,5	11	32	20	–	–	25	5,0	75	0,5	**PHP 1SPA80TB**
		85	1	1210	90,5	11	32	20	–	–	25	5,0	75	0,6	**PHP 1SPA85TB**
		90	1	1210	95,5	11	32	20	–	–	25	5,0	75	0,7	**PHP 1SPA90TB**
		95	1	1210	100,5	11	32	20	–	–	25	5,0	75	0,9	**PHP 1SPA95TB**
		100	1	1610	105,5	14	42	20	–	–	25	5,0	80	0,8	**PHP 1SPA100TB**
		106	1	1610	111,5	14	42	20	–	–	25	5,0	80	0,9	**PHP 1SPA106TB**
		112	1	1610	117,5	14	42	20	–	–	25	5,0	80	1,1	**PHP 1SPA112TB**
		118	1	1610	123,5	14	42	20	–	–	25	5,0	80	1,2	**PHP 1SPA118TB**
		125	1	1610	130,5	14	42	20	–	–	25	5,0	80	1,4	**PHP 1SPA125TB**
		132	1	1610	137,5	14	42	20	–	–	25	5,0	80	1,6	**PHP 1SPA132TB**
		140	1	1610	145,5	14	42	20	–	–	25	5,0	80	1,8	**PHP 1SPA140TB**
		150	1	1610	155,5	14	42	20	–	–	25	5,0	80	2,1	**PHP 1SPA150TB**
		160	1	1610	165,5	14	42	20	–	–	25	5,0	80	2,4	**PHP 1SPA160TB**
		170	1	1610	175,5	14	42	20	–	–	25	5,0	80	1,1	**PHP 1SPA170TB**
		180	4	1610	185,5	14	42	20	145	–	25	5,0	92	2,3	**PHP 1SPA180TB**
		190	4	1610	195,5	14	42	20	156	–	25	5,0	92	2,7	**PHP 1SPA190TB**
		200	4	2012	205,5	14	50	20	165	–	32	12,0	108	2,3	**PHP 1SPA200TB**
		212	4	2012	217,5	14	50	20	177	–	32	12,0	110	3,5	**PHP 1SPA212TB**
		224	4	2012	229,5	14	50	20	189	–	32	12,0	112	4,0	**PHP 1SPA224TB**
		250	4	2012	255,5	14	50	20	215	6,0	32	6,0	112	4,8	**PHP 1SPA250TB**
		280	4	2012	285,5	14	50	20	245	–	32	12,0	112	6,3	**PHP 1SPA280TB**

* Mass does not include bushings.
Non-functional dimensions may vary slightly.

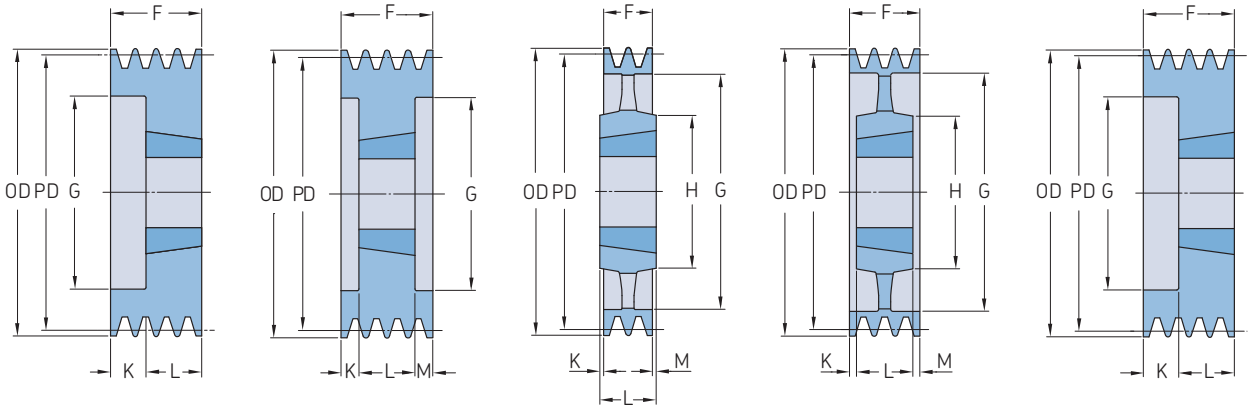

Type 2 Type 3 Type 4 Type 5 Type 6

Section	Number of grooves	Pitch diameter PD	Pulley type	Bushing number	Dimensions Outer diameter OD	B Min.	Max.	F	G	K	L	M	H	Mass*	Designation
–	–	mm	–	–	mm									kg	–
SPA	**1**	315	4	2012	320,5	14	50	20	280	–	32	12,0	112	7,2	**PHP 1SPA315TB**
		355	4	2012	360,5	14	50	20	320	–	32	12,0	112	7,6	**PHP 1SPA355TB**
		400	4	2012	405,5	14	50	20	365	–	32	12,0	112	7,9	**PHP 1SPA400TB**
		450	4	2012	455,5	16	60	20	415	–	32	12,0	112	8,4	**PHP 1SPA450TB**
		500	4	2517	505,5	16	60	20	465	–	45	12,0	112	9,4	**PHP 1SPA500TB**
		630	4	2517	635,5	16	60	20	595	–	45	12,0	112	13,1	**PHP 1SPA630TB**
SPA	**2**	63	6	1008	68,5	9	28	35	33	13,0	22	–	–	0,6	**PHP 2SPA63TB**
		67	6	1108	72,5	9	28	35	37	13,0	22	–	–	0,4	**PHP 2SPA67TB**
		71	6	1108	76,5	9	28	35	40	13,0	22	–	–	0,5	**PHP 2SPA71TB**
		75	6	1108	80,5	9	28	35	44	13,0	25	–	–	0,7	**PHP 2SPA75TB**
		80	6	1210	85,5	11	32	35	47	10,0	25	–	–	0,6	**PHP 2SPA80TB**
		85	6	1210	90,5	11	32	35	50	10,0	25	–	–	0,7	**PHP 2SPA85TB**
		90	6	1610	95,5	14	42	35	60	10,0	25	–	–	0,7	**PHP 2SPA90TB**
		95	6	1610	100,5	14	42	35	64	10,0	25	–	–	0,9	**PHP 2SPA95TB**
		100	6	1610	105,5	14	42	35	70	10,0	25	–	–	1,1	**PHP 2SPA100TB**
		106	6	1610	111,5	14	42	35	76	10,0	25	–	–	1,2	**PHP 2SPA106TB**
		112	6	1610	117,5	14	42	35	80	10,0	25	–	–	1,4	**PHP 2SPA112TB**
		118	6	1610	123,5	14	42	35	86	10,0	25	–	–	1,6	**PHP 2SPA118TB**
		125	6	1610	130,5	14	42	35	90	10,0	25	–	–	1,9	**PHP 2SPA125TB**
		132	6	2012	137,5	14	50	35	98	3,0	32	–	–	2,1	**PHP 2SPA132TB**
		140	6	2012	145,5	14	50	35	106	3,0	32	–	–	2,6	**PHP 2SPA140TB**
		150	6	2012	155,5	14	50	35	116	3,0	32	–	–	3,2	**PHP 2SPA150TB**
		160	6	2012	165,5	14	50	35	125	3,0	32	–	–	3,8	**PHP 2SPA160TB**
		170	6	2012	175,5	14	50	35	135	3,0	32	–	–	4,5	**PHP 2SPA170TB**
		180	7	2012	185,5	14	50	35	148	2,0	32	2,0	100	5,2	**PHP 2SPA180TB**
		190	7	2012	195,5	14	50	35	158	2,0	32	2,0	100	4,4	**PHP 2SPA190TB**
		200	8	2517	205,5	16	60	35	165	5,0	45	5,0	120	4,9	**PHP 2SPA200TB**
		212	4	2517	217,5	16	65	35	177	5,0	45	5,0	120	5,8	**PHP 2SPA212TB**
		224	4	2517	229,5	16	60	35	189	–	45	10,0	120	6,6	**PHP 2SPA224TB**
		250	4	2517	255,5	16	60	35	215	5,0	45	5,0	120	6,8	**PHP 2SPA250TB**
		280	4	2517	285,5	16	60	35	245	–	45	10,0	120	8,3	**PHP 2SPA280TB**
		315	4	2517	320,5	16	60	35	280	–	45	10,0	120	10,2	**PHP 2SPA315TB**
		355	4	2517	360,5	16	60	35	320	–	45	10,0	120	10,5	**PHP 2SPA355TB**
		400	4	2517	405,5	16	60	35	365	–	45	10,0	120	11,3	**PHP 2SPA400TB**
		450	4	2517	455,5	16	60	35	465	–	45	10,0	120	15,0	**PHP 2SPA450TB**
		500	4	2517	505,5	16	60	35	525	–	51	16,0	150	18,7	**PHP 2SPA500TB**
		630	4	3020	635,5	25	75	35	595	8,0	51	8,0	150	22,0	**PHP 2SPA630TB**
SPA	**3**	71	6	1108	76,5	9	28	50	40	28,0	22	–	–	0,7	**PHP 3SPA71TB**
		75	6	1108	80,5	9	28	50	44	28,0	25	–	–	0,8	**PHP 3SPA75TB**
		80	6	1210	85,5	11	32	50	47	25,0	25	–	–	0,9	**PHP 3SPA80TB**
		85	6	1210	90,5	11	32	50	50	25,0	25	–	–	1,0	**PHP 3SPA85TB**
		90	6	1610	95,5	14	42	50	60	25,0	25	–	–	1,0	**PHP 3SPA90TB**
		95	6	1610	100,5	14	42	50	64	25,0	25	–	–	1,2	**PHP 3SPA95TB**
		100	2	1610	105,5	14	42	50	70	–	25	25,0	–	1,3	**PHP 3SPA100TB**
		106	2	1610	111,5	14	42	50	76	–	25	25,0	–	1,6	**PHP 3SPA106TB**
		112	6	2012	117,5	14	50	50	83	18,0	32	–	–	1,6	**PHP 3SPA112TB**
		118	2	2012	123,5	14	50	50	86	–	32	18,0	–	1,9	**PHP 3SPA118TB**
		125	2	2012	130,5	14	50	50	92	–	32	18,0	–	2,3	**PHP 3SPA125TB**
		132	2	2012	137,5	14	50	50	98	–	32	18,0	–	2,6	**PHP 3SPA132TB**
		140	6	2517	145,5	16	60	50	106	5,0	45	–	–	2,9	**PHP 3SPA140TB**
		150	6	2517	155,5	16	60	50	116	5,0	45	–	–	3,7	**PHP 3SPA150TB**
		160	6	2517	165,5	16	60	50	126	5,0	45	–	–	4,5	**PHP 3SPA160TB**

* Mass does not include bushings.
Non-functional dimensions may vary slightly.

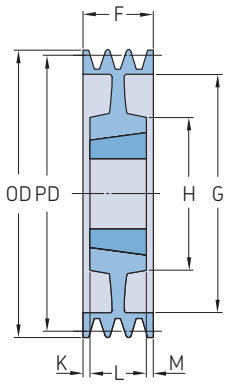

Type 7

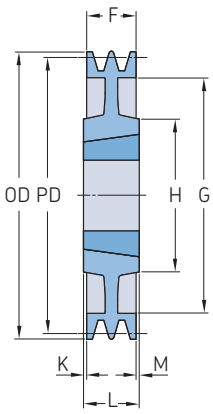

Type 8

Section	Number of grooves	Pitch diameter PD	Pulley type	Bushing number	Dimensions Outer diameter OD	B Min.	B Max.	F	G	K	L	M	H	Mass*	Designation
–	–	mm	–	–	mm									kg	–
SPA	**3**	170	6	2517	175,5	16	60	50	138	5,0	45	–	–	5,0	**PHP 3SPA170TB**
		180	6	2517	185,5	16	60	50	146	5,0	45	–	–	6,2	**PHP 3SPA180TB**
		190	6	2517	195,5	16	60	50	158	5,0	45	–	–	7,0	**PHP 3SPA190TB**
		200	7	2517	205,5	16	60	50	165	2,5	45	2,5	120	5,6	**PHP 3SPA200TB**
		212	5	2517	217,5	16	60	50	177	2,5	45	2,5	120	6,6	**PHP 3SPA212TB**
		224	5	2517	229,5	16	60	50	189	2,5	45	2,5	120	7,5	**PHP 3SPA224TB**
		250	5	2517	255,5	16	60	50	215	2,5	45	2,5	120	8,6	**PHP 3SPA250TB**
		280	5	2517	285,5	16	60	50	245	2,5	45	2,5	120	10,0	**PHP 3SPA280TB**
		315	4	3020	320,5	25	75	50	280	0,5	51	0,5	160	12,8	**PHP 3SPA315TB**
		355	4	3020	360,5	25	75	50	320	0,5	51	0,5	150	13,4	**PHP 3SPA355TB**
		400	4	3020	405,5	25	75	50	365	–	51	1,0	150	15,9	**PHP 3SPA400TB**
		450	4	3020	455,5	25	75	50	415	–	51	1,0	150	19,3	**PHP 3SPA450TB**
		500	4	3020	505,5	25	75	50	465	–	51	1,0	150	22,6	**PHP 3SPA500TB**
		560	4	3020	565,5	25	75	50	525	–	51	1,0	150	23,5	**PHP 3SPA560TB**
		630	4	3020	635,5	25	75	50	595	–	51	1,0	150	27,5	**PHP 3SPA630TB**
		800	4	3535	805,5	35	90	50	765	19,5	89	19,5	170	40,8	**PHP 3SPA800TB**
		1 000	4	3535	1 005,5	35	90	50	965	19,5	89	19,5	178	50,0	**PHP 3SPA1000TB**
SPA	**4**	90	6	1615	95,5	14	42	65	64	27,0	38	–	–	1,2	**PHP 4SPA90TB**
		95	6	1615	100,5	14	42	65	64	27,0	38	–	–	1,4	**PHP 4SPA95TB**
		100	2	1615	105,5	14	42	65	70	-	38	27,0	–	1,6	**PHP 4SPA100TB**
		106	6	2012	111,5	14	50	65	76	33,0	32	–	–	1,7	**PHP 4SPA106TB**
		112	6	2012	117,5	14	50	65	80	33,0	32	–	–	2,0	**PHP 4SPA112TB**
		118	2	2012	123,5	14	50	65	86	–	32	33,0	–	2,3	**PHP 4SPA118TB**
		125	2	2012	130,5	14	50	65	92	–	32	33,0	–	2,7	**PHP 4SPA125TB**
		132	2	2517	137,5	16	60	65	98	–	45	20,0	–	2,9	**PHP 4SPA132TB**
		140	2	2517	145,5	16	60	65	106	–	45	20,0	–	3,5	**PHP 4SPA140TB**
		150	2	2517	155,5	16	60	65	116	–	45	20,0	–	4,2	**PHP 4SPA150TB**
		160	2	2517	165,5	16	60	65	126	–	45	20,0	–	5,1	**PHP 4SPA160TB**
		170	2	2517	175,5	16	60	65	138	–	45	20,0	–	6,0	**PHP 4SPA170TB**
		180	2	2517	185,5	16	60	65	146	–	45	20,0	–	6,9	**PHP 4SPA180TB**
		190	2	2517	195,5	25	60	65	158	–	45	20,0	–	7,2	**PHP 4SPA190TB**
		200	2	3020	205,5	25	75	65	165	–	51	14,0	–	8,4	**PHP 4SPA200TB**
		212	2	3020	217,5	25	75	65	177	–	51	14,0	–	9,9	**PHP 4SPA212TB**
		224	2	3020	229,5	25	75	65	189	–	51	14,0	–	11,4	**PHP 4SPA224TB**
		250	5	3020	255,5	25	75	65	215	7,0	51	7,0	150	10,5	**PHP 4SPA250TB**
		280	5	3020	285,5	25	75	65	245	7,0	51	7,0	150	11,6	**PHP 4SPA280TB**
		315	5	3020	320,5	25	75	65	280	7,0	51	7,0	150	13,8	**PHP 4SPA315TB**
		355	5	3020	360,5	25	75	65	320	7,0	51	7,0	150	15,8	**PHP 4SPA355TB**
		400	5	3020	405,5	25	75	65	365	7,0	51	7,0	150	17,7	**PHP 4SPA400TB**
		450	5	3020	455,5	25	75	65	415	7,0	51	7,0	150	23,2	**PHP 4SPA450TB**
		500	5	3020	505,5	25	75	65	465	7,0	51	7,0	150	27,4	**PHP 4SPA500TB**
		560	4	3535	565,5	35	90	65	525	12,0	89	12,0	170	30,5	**PHP 4SPA560TB**
		630	4	4545	635,5	35	90	65	595	12,0	89	12,0	170	34,1	**PHP 4SPA630TB**
		800	4	3535	805,5	35	90	65	765	12,0	89	12,0	170	50,8	**PHP 4SPA800TB**
		1 000	4	4040	1 005,5	40	100	65	965	18,5	102	18,5	216	62,0	**PHP 4SPA1000TB**
SPA	**5**	100	2	1615	105,5	14	42	80	70	-	38	42,0	–	1,9	**PHP 5SPA100TB**
		106	6	2012	111,5	14	50	80	76	48,0	32	–	–	2,1	**PHP 5SPA106TB**
		112	6	2012	117,5	14	50	80	80	48,0	32	–	–	2,4	**PHP 5SPA112TB**
		118	2	2012	123,5	14	50	80	86	–	32	48,0	–	2,7	**PHP 5SPA118TB**
		125	3	2012	130,5	14	50	80	92	24,0	32	24,0	–	3,1	**PHP 5SPA125TB**
		132	3	2517	137,5	16	60	80	98	17,5	45	17,5	–	3,2	**PHP 5SPA132TB**
		140	3	2517	145,5	16	60	80	106	17,5	45	17,5	–	3,9	**PHP 5SPA140TB**
		150	3	2517	155,5	16	60	80	116	17,5	45	17,5	–	4,7	**PHP 5SPA150TB**

* Mass does not include bushings.
Non-functional dimensions may vary slightly.

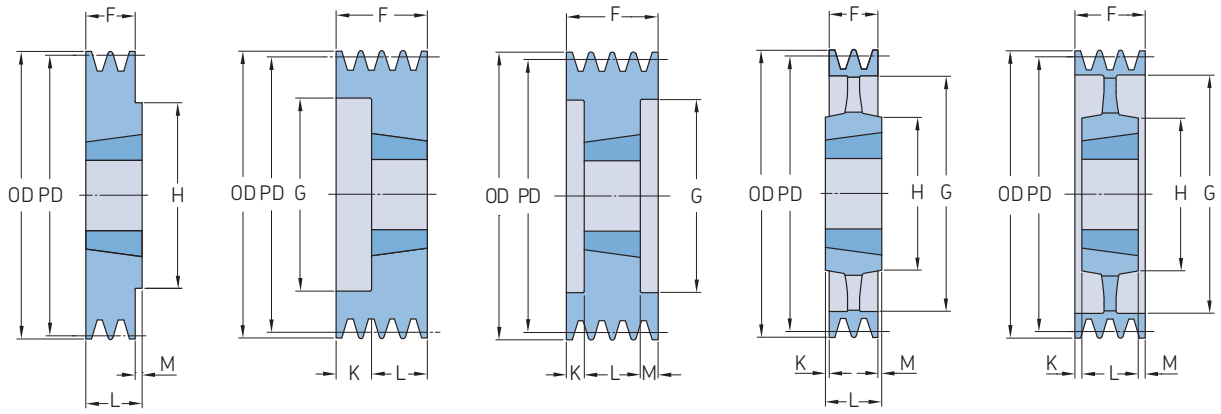

Section	Number of grooves	Pitch diameter PD	Pulley type	Bushing number	Dimensions Outer diameter OD	B Min.	B Max.	F	G	K	L	M	H	Mass*	Designation
–	–	mm	–	–	mm									kg	–
SPA	**5**	160	3	2517	165,5	16	60	80	126	17,5	45	17,5	–	5,6	**PHP 5SPA160TB**
		170	3	2517	175,5	16	60	80	146	17,5	45	17,5	–	6,2	**PHP 5SPA170TB**
		180	3	3020	185,5	25	75	80	165	14,5	51	14,5	–	6,8	**PHP 5SPA180TB**
		190	2	3020	195,5	25	75	80	189	–	51	29,0	–	7,4	**PHP 5SPA190TB**
		200	3	3020	205,5	25	75	80	215	14,5	51	14,5	–	9,1	**PHP 5SPA200TB**
		212	2	3020	217,5	25	75	80	245	–	51	29,0	–	10,7	**PHP 5SPA212TB**
		224	2	3020	229,5	25	75	80	280	–	51	29,0	–	12,3	**PHP 5SPA224TB**
		250	7	3020	255,5	25	75	80	215	14,5	51	14,5	150	11,7	**PHP 5SPA250TB**
		280	4	3535	285,5	35	90	80	245	4,5	89	4,5	170	17,4	**PHP 5SPA280TB**
		315	4	3535	320,5	35	90	80	280	4,5	89	4,5	170	20,0	**PHP 5SPA315TB**
		355	4	3535	360,5	35	90	80	320	4,5	89	4,5	170	22,8	**PHP 5SPA355TB**
		400	4	3535	405,5	35	90	80	365	4,5	89	4,5	170	24,8	**PHP 5SPA400TB**
		450	4	3535	455,5	35	90	80	415	4,5	89	4,5	170	28,5	**PHP 5SPA450TB**
		500	4	3535	505,5	35	90	80	465	4,5	89	4,5	170	31,7	**PHP 5SPA500TB**
		560	4	3535	565,5	35	90	80	525	4,5	89	4,5	170	35,0	**PHP 5SPA560TB**
		630	4	3535	635,5	35	90	80	595	4,5	89	4,5	170	42,0	**PHP 5SPA630TB**
		800	4	4040	805,5	40	100	80	765	11,0	102	11,0	216	60,0	**PHP 5SPA800TB**
		1 000	4	4545	1 005,5	55	120	80	965	17,0	114	17,0	225	70,0	**PHP 5SPA1000TB**
SPA	**6**	100	3	1610	105,5	14	42	95	70	30,0	38	40,0	–	2,2	**PHP 6SPA100TB**
		106	6	2012	111,5	14	50	95	76	63,0	32	–	–	2,5	**PHP 6SPA106TB**
		112	6	2012	117,5	14	50	95	80	63,0	32	–	–	2,8	**PHP 6SPA112TB**
		118	6	2012	123,5	14	50	95	86	63,0	32	–	–	3,1	**PHP 6SPA118TB**
		125	3	2012	130,5	14	50	95	92	31,5	32	31,5	–	3,7	**PHP 6SPA125TB**
		132	3	2517	137,5	16	60	95	98	25,0	45	25,0	–	3,6	**PHP 6SPA132TB**
		140	3	2517	145,5	16	60	95	106	25,0	45	25,0	–	4,5	**PHP 6SPA140TB**
		150	3	2517	155,5	16	60	95	116	25,0	45	25,0	–	5,3	**PHP 6SPA150TB**
		160	3	2517	165,5	16	60	95	126	25,0	45	25,0	–	6,3	**PHP 6SPA160TB**
		170	3	3020	175,5	25	75	95	135	22,0	51	22,0	–	6,3	**PHP 6SPA170TB**
		180	3	3020	185,5	25	75	95	146	22,0	51	22,0	–	7,5	**PHP 6SPA180TB**
		190	3	3020	195,5	25	75	95	155	22,0	51	22,0	–	8,6	**PHP 6SPA190TB**
		200	3	3020	205,5	25	75	95	165	22,0	51	22,0	–	9,9	**PHP 6SPA200TB**
		212	3	3020	217,5	25	75	95	177	22,0	51	22,0	–	11,6	**PHP 6SPA212TB**
		224	3	3020	229,5	25	75	95	189	22,0	51	22,0	–	13,2	**PHP 6SPA224TB**
		250	7	3020	255,5	25	75	95	215	22,0	51	22,0	150	12,5	**PHP 6SPA250TB**
		280	5	3535	285,5	35	90	95	245	3,0	89	3,0	170	19,0	**PHP 6SPA280TB**
		315	5	3535	320,5	35	90	95	280	3,0	89	3,0	170	21,1	**PHP 6SPA315TB**
		355	5	3535	360,5	35	90	95	320	3,0	89	3,0	170	23,5	**PHP 6SPA355TB**
		400	5	3535	405,5	35	90	95	365	3,0	89	3,0	170	26,0	**PHP 6SPA400TB**
		450	5	3535	455,5	35	90	95	415	3,0	89	3,0	170	30,0	**PHP 6SPA450TB**
		500	5	3535	505,5	35	90	95	465	3,0	89	3,0	170	34,0	**PHP 6SPA500TB**
		560	5	3535	565,5	35	90	95	525	3,0	89	3,0	170	39,0	**PHP 6SPA560TB**
		630	4	4040	635,5	40	100	95	595	3,5	102	3,5	216	53,5	**PHP 6SPA630TB**
		800	4	4040	805,5	40	100	95	765	3,5	102	3,5	216	70,0	**PHP 6SPA800TB**
		1 000	4	4545	1 005,5	55	120	95	965	9,5	114	9,5	225	85,5	**PHP 6SPA1000TB**
SPB	**1**	100	1	1610	107,0	14	42	25	–	–	25	–	–	0,8	**PHP 1SPB100TB**
		106	1	1610	113,0	14	42	25	–	–	25	–	–	1,0	**PHP 1SPB106TB**
		112	1	1610	119,0	14	42	25	–	–	25	–	–	1,2	**PHP 1SPB112TB**
		118	1	1610	125,0	14	42	25	–	–	25	–	–	1,5	**PHP 1SPB118TB**
		125	1	1610	132,0	14	42	25	–	–	25	–	–	1,5	**PHP 1SPB125TB**
		132	1	1610	139,0	14	42	25	–	–	25	–	–	1,8	**PHP 1SPB132TB**
		140	1	1610	147,0	14	42	25	–	–	25	–	–	2,1	**PHP 1SPB140TB**
		150	1	1610	157,0	14	42	25	–	–	25	–	–	2,5	**PHP 1SPB150TB**
		160	1	1610	167,0	14	42	25	–	–	25	–	–	2,9	**PHP 1SPB160TB**

* Mass does not include bushings.
Non-functional dimensions may vary slightly.

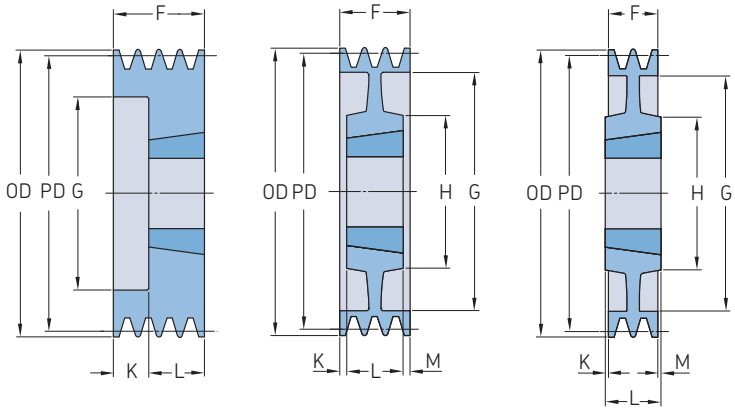

Section	Number of grooves	Pitch diameter PD	Pulley type	Bushing number	Dimensions Outer diameter OD	B Min.	Max.	F	G	K	L	M	H	Mass*	Designation
–	–	mm	–	–	mm									kg	–
SPB	**1**	170	1	1610	177,0	14	42	25	–	–	25	–	–	3,0	**PHP 1SPB170TB**
		180	7	1610	187,0	14	42	25	137	–	25	–	80	3,8	**PHP 1SPB180TB**
		190	8	2012	197,0	14	50	25	147	3,5	32	3,5	100	4,4	**PHP 1SPB190TB**
		200	4	2012	207,0	14	50	25	157	3,5	32	3,5	104	4,0	**PHP 1SPB200TB**
		212	4	2012	219,0	14	50	25	169	3,5	32	3,5	104	5,2	**PHP 1SPB212TB**
		224	4	2012	231,0	14	50	25	181	3,5	32	3,5	104	5,2	**PHP 1SPB224TB**
		236	4	2012	243,0	14	50	25	193	3,5	32	3,5	104	5,4	**PHP 1SPB236TB**
		250	4	2012	257,0	14	50	25	207	3,5	32	3,5	104	6,2	**PHP 1SPB250TB**
		280	4	2012	287,0	14	50	25	237	3,5	32	3,5	104	6,5	**PHP 1SPB280TB**
		300	4	2012	307,0	14	50	25	258	3,5	32	3,5	104	7,0	**PHP 1SPB300TB**
		315	4	2012	322,0	14	50	25	272	3,5	32	3,5	100	7,5	**PHP 1SPB315TB**
		335	4	2517	342,0	16	60	25	288	10,0	45	10,0	125	8,5	**PHP 1SPB335TB**
		355	4	3020	362,0	25	75	25	312	13,0	51	13,0	146	9,5	**PHP 1SPB355TB**
		400	4	3020	407,0	25	75	25	357	13,0	51	13,0	146	11,0	**PHP 1SPB400TB**
		450	4	3020	457,0	25	75	25	407	13,0	51	13,0	150	12,3	**PHP 1SPB450TB**
		500	4	3020	507,0	25	75	25	457	13,0	51	13,0	150	14,6	**PHP 1SPB500TB**
		560	4	3020	567,0	25	75	25	517	13,0	51	13,0	150	18,5	**PHP 1SPB560TB**
		630	4	3020	637,0	25	75	25	587	13,0	51	13,0	150	20,5	**PHP 1SPB630TB**
SPB	**2**	100	6	1610	107,0	14	42	44	62	19,0	25	–	–	1,3	**PHP 2SPB100TB**
		106	6	1610	113,0	14	42	44	67	19,0	25	–	–	1,5	**PHP 2SPB106TB**
		112	6	1610	119,0	14	42	44	72	19,0	25	–	–	1,5	**PHP 2SPB112TB**
		118	2	1610	125,0	14	42	44	78	–	25	19,0	–	1,7	**PHP 2SPB118TB**
		125	2	2012	132,0	14	50	44	82	–	32	12,0	–	2,0	**PHP 2SPB125TB**
		132	2	2012	139,0	14	50	44	89	–	32	12,0	–	2,4	**PHP 2SPB132TB**
		140	2	2012	147,0	14	50	44	97	–	32	12,0	–	2,8	**PHP 2SPB140TB**
		150	2	2012	157,0	14	50	44	107	–	32	12,0	–	3,3	**PHP 2SPB150TB**
		160	2	2012	167,0	14	50	44	117	–	32	12,0	–	4,0	**PHP 2SPB160TB**
		170	2	2012	177,0	14	50	44	127	–	32	12,0	–	4,4	**PHP 2SPB170TB**
		180	1	2517	187,0	16	60	44	–	–	45	1,0	120	5,5	**PHP 2SPB180TB**
		190	1	2517	197,0	16	60	44	–	–	45	1,0	120	6,5	**PHP 2SPB190TB**
		200	1	2517	207,0	16	60	44	–	–	45	1,0	120	7,5	**PHP 2SPB200TB**
		212	8	2517	219,0	16	60	44	169	–	45	1,0	120	7,0	**PHP 2SPB212TB**
		224	4	2517	231,0	16	60	44	181	–	45	1,0	120	7,7	**PHP 2SPB224TB**
		236	4	2517	243,0	16	60	44	193	–	45	1,0	120	8,3	**PHP 2SPB236TB**
		250	4	2517	257,0	16	60	44	207	–	45	1,0	120	8,6	**PHP 2SPB250TB**
		280	4	2517	287,0	16	60	44	237	–	45	1,0	120	10,1	**PHP 2SPB280TB**
		300	4	2517	307,0	16	60	44	257	–	45	1,0	120	11,0	**PHP 2SPB300TB**
		315	4	2517	322,0	16	60	44	272	–	45	1,0	120	12,2	**PHP 2SPB315TB**
		335	4	2517	342,0	16	60	44	292	–	45	1,0	120	14,0	**PHP 2SPB335TB**
		355	4	3020	362,0	25	75	44	312	3,5	51	3,5	120	15,9	**PHP 2SPB355TB**
		400	4	3020	407,0	25	75	44	357	3,5	51	3,5	150	18,3	**PHP 2SPB400TB**
		450	4	3020	457,0	25	75	44	407	3,5	51	3,5	150	16,3	**PHP 2SPB450TB**
		500	4	3020	507,0	25	75	44	457	3,5	51	3,5	150	18,6	**PHP 2SPB500TB**
		560	4	3030	567,0	35	75	44	517	4,0	76	28,0	150	22,5	**PHP 2SPB560TB**
		630	4	3030	637,0	35	75	44	587	16,0	76	–	150	25,5	**PHP 2SPB630TB**
SPB	**3**	100	6	1610	107,0	14	42	63	62	38,0	25	–	–	0,9	**PHP 3SPB100TB**
		106	6	1610	113,0	14	42	63	67	38,0	25	–	–	2,0	**PHP 3SPB106TB**
		112	6	1610	119,0	14	42	63	72	38,0	25	–	–	2,0	**PHP 3SPB112TB**
		118	2	1610	125,0	14	42	63	78	–	25	38,0	–	2,3	**PHP 3SPB118TB**
		125	2	2012	132,0	14	50	63	82	–	32	31,0	–	2,5	**PHP 3SPB125TB**
		132	2	2012	139,0	14	50	63	89	–	32	31,0	–	3,1	**PHP 3SPB132TB**
		140	2	2012	147,0	14	50	63	97	–	32	31,0	–	3,5	**PHP 3SPB140TB**
		150	2	2517	157,0	16	60	63	107	–	45	18,0	–	4,0	**PHP 3SPB150TB**

* Mass does not include bushings.
Non-functional dimensions may vary slightly.

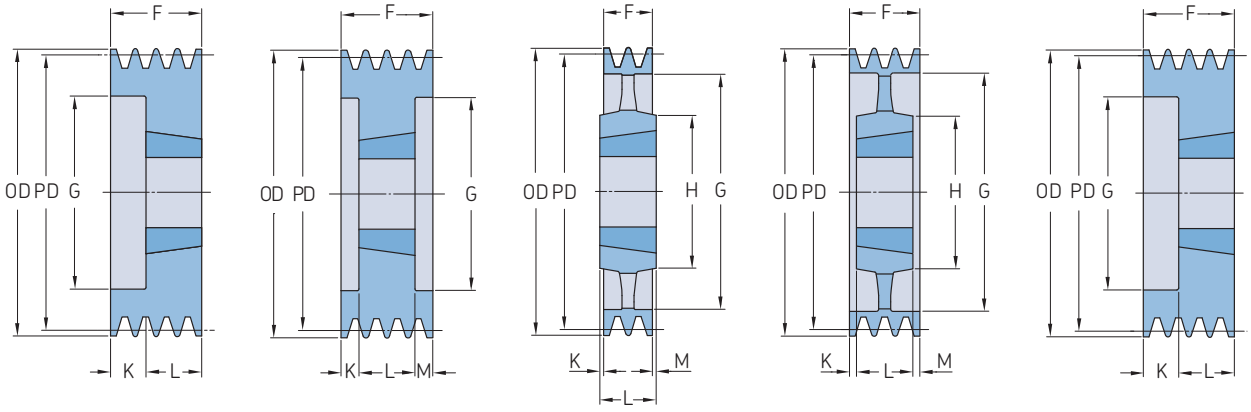

Type 2 Type 3 Type 4 Type 5 Type 6

Section	Number of grooves	Pitch diameter PD	Pulley type	Bushing number	Dimensions Outer diameter OD	B Min.	B Max.	F	G	K	L	M	H	Mass*	Designation
–	–	mm	–	–	mm									kg	–
SPB	**3**	160	2	2517	167,0	16	60	63	117	–	45	18,0	–	4,9	**PHP 3SPB160TB**
		170	2	2517	177,0	16	60	63	127	–	45	18,0	–	5,7	**PHP 3SPB170TB**
		180	2	2517	187,0	16	60	63	137	–	45	18,0	–	6,7	**PHP 3SPB180TB**
		190	2	2517	197,0	16	60	63	147	–	45	18,0	–	7,6	**PHP 3SPB190TB**
		200	2	2517	207,0	16	60	63	157	–	45	18,0	–	8,9	**PHP 3SPB200TB**
		212	7	2517	219,0	16	60	63	169	–	45	18,0	120	8,2	**PHP 3SPB212TB**
		224	4	2517	231,0	16	60	63	181	–	45	18,0	120	9,1	**PHP 3SPB224TB**
		236	4	2517	243,0	16	60	63	193	–	45	18,0	120	9,8	**PHP 3SPB236TB**
		250	4	3020	257,0	25	75	63	207	–	51	12,0	150	11,2	**PHP 3SPB250TB**
		280	4	3020	287,0	25	75	63	237	6,0	51	6,0	150	12,0	**PHP 3SPB280TB**
		300	4	3020	307,0	25	75	63	257	6,0	51	6,0	150	13,5	**PHP 3SPB300TB**
		315	4	3020	322,0	25	75	63	272	6,0	51	6,0	150	14,2	**PHP 3SPB315TB**
		335	4	3020	342,0	25	75	63	292	6,0	51	6,0	150	16,0	**PHP 3SPB335TB**
		355	4	3020	362,0	25	75	63	312	6,0	51	6,0	150	17,7	**PHP 3SPB355TB**
		400	4	3535	407,0	35	90	63	357	13,0	89	13,0	170	25,0	**PHP 3SPB400TB**
		450	4	3535	457,0	35	90	63	407	–	89	26,0	170	26,3	**PHP 3SPB450TB**
		500	4	3535	507,0	35	90	63	457	–	89	26,0	170	29,9	**PHP 3SPB500TB**
		560	4	3535	567,0	35	90	63	517	–	89	26,0	170	37,2	**PHP 3SPB560TB**
		630	4	3535	637,0	35	90	63	587	–	89	26,0	170	41,0	**PHP 3SPB630TB**
		710	4	3535	717,0	35	90	63	664	13,0	89	13,0	170	48,0	**PHP 3SPB710TB**
		800	4	3535	807,0	35	90	63	754	13,0	89	13,0	170	55,0	**PHP 3SPB800TB**
		900	4	3535	907,0	35	90	63	854	13,0	89	13,0	170	64,1	**PHP 3SPB900TB**
		1 000	4	4040	1 007,0	40	100	63	954	20,0	102	20,0	210	72,0	**PHP 3SPB1000TB**
		1 250	4	4040	1 257,0	40	100	63	1 204	20,0	102	20,0	210	140,0	**PHP 3SPB1250TB**
SPB	**4**	100	3	1210	107,0	11	32	82	58	29,0	25	29,0	–	2,4	**PHP 4SPB100TB**
		106	3	1610	113,0	14	42	82	65	29,0	25	29,0	–	2,3	**PHP 4SPB106TB**
		112	3	1610	119,0	14	42	82	65	29,0	25	29,0	–	2,8	**PHP 4SPB112TB**
		118	3	1610	125,0	14	42	82	71	29,0	25	29,0	–	3,3	**PHP 4SPB118TB**
		125	3	2012	132,0	14	50	82	82	25,0	32	25,0	–	3,0	**PHP 4SPB125TB**
		132	3	2012	139,0	14	50	82	89	25,0	32	25,0	–	3,8	**PHP 4SPB132TB**
		140	3	2517	147,0	16	60	82	97	18,5	45	18,5	–	4,0	**PHP 4SPB140TB**
		150	3	2517	157,0	16	60	82	107	18,5	45	18,5	–	4,9	**PHP 4SPB150TB**
		160	3	2517	167,0	16	60	82	117	18,5	45	18,5	–	5,8	**PHP 4SPB160TB**
		170	3	2517	177,0	16	60	82	127	18,5	45	18,5	–	6,6	**PHP 4SPB170TB**
		180	3	2517	187,0	16	60	82	137	18,5	45	18,5	–	7,7	**PHP 4SPB180TB**
		190	3	2517	197,0	16	60	82	147	18,5	45	18,5	–	8,6	**PHP 4SPB190TB**
		200	3	3020	207,0	25	75	82	157	15,5	51	15,5	–	9,3	**PHP 4SPB200TB**
		212	3	3020	219,0	25	75	82	169	15,5	51	15,5	–	10,9	**PHP 4SPB212TB**
		224	3	3020	231,0	25	75	82	181	15,5	51	15,5	–	12,4	**PHP 4SPB224TB**
		236	3	3020	243,0	25	75	82	193	15,5	51	15,5	–	14,1	**PHP 4SPB236TB**
		250	5	3020	257,0	25	75	82	207	15,5	51	15,5	150	12,7	**PHP 4SPB250TB**
		280	5	3020	287,0	25	75	82	237	15,5	51	15,5	150	13,8	**PHP 4SPB280TB**
		300	4	3535	307,0	35	90	82	257	–	89	7,0	150	20,5	**PHP 4SPB300TB**
		315	4	3535	322,0	35	90	82	272	3,5	89	3,5	170	20,6	**PHP 4SPB315TB**
		335	4	3535	342,0	35	90	82	292	3,5	89	3,5	170	22,0	**PHP 4SPB335TB**
		355	4	3535	362,0	35	90	82	312	3,5	89	3,5	170	23,2	**PHP 4SPB355TB**
		400	4	3535	407,0	35	90	82	357	3,5	89	3,5	170	26,5	**PHP 4SPB400TB**
		450	4	3535	457,0	35	90	82	407	-	89	7,0	170	29,7	**PHP 4SPB450TB**
		500	4	3535	507,0	35	90	82	457	-	89	7,0	170	34,7	**PHP 4SPB500TB**
		560	4	3535	567,0	35	90	82	517	-	89	7,0	170	39,0	**PHP 4SPB560TB**
		630	4	3535	637,0	35	90	82	587	-	89	7,0	170	44,5	**PHP 4SPB630TB**
		710	4	3535	717,0	35	90	82	664	3,5	89	3,5	187	50,5	**PHP 4SPB710TB**
		800	4	4040	807,0	40	100	82	754	10,0	102	10,0	200	60,5	**PHP 4SPB800TB**
		900	4	4040	907,0	40	100	82	854	10,0	102	10,0	216	70,0	**PHP 4SPB900TB**

* Mass does not include bushings.
Non-functional dimensions may vary slightly.

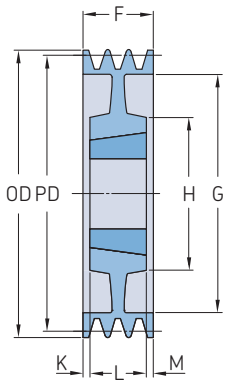

Type 7

Section	Number of grooves	Pitch diameter PD	Pulley type	Bushing number	Dimensions Outer diameter OD	B Min.	B Max.	F	G	K	L	M	H	Mass*	Designation
–	–	mm	–	–	mm									kg	–
SPB	**4**	1 000	4	4040	1 007,0	40	100	82	954	10,0	102	10,0	216	76,5	**PHP 4SPB1000TB**
		1 250	4	4545	1 257,0	55	110	82	1 204	16,0	114	16,0	225	162,0	**PHP 4SPB1250TB**
SPB	**5**	125	6	2012	132,0	14	50	101	87	69,0	32	–	–	3,6	**PHP 5SPB125TB**
		132	6	2517	139,0	16	60	101	94	56,0	45	–	–	3,8	**PHP 5SPB132TB**
		140	3	2517	147,0	16	60	101	97	28,0	45	28,0	–	4,2	**PHP 5SPB140TB**
		150	3	2517	157,0	16	60	101	107	28,0	45	28,0	–	5,7	**PHP 5SPB150TB**
		160	3	2517	167,0	16	60	101	117	28,0	45	28,0	–	6,7	**PHP 5SPB160TB**
		170	3	3020	177,0	25	75	101	127	25,0	51	25,0	–	6,7	**PHP 5SPB170TB**
		180	3	3020	187,0	25	75	101	137	25,0	51	25,0	–	7,8	**PHP 5SPB180TB**
		190	3	3020	197,0	25	75	101	147	25,0	51	25,0	–	9,1	**PHP 5SPB190TB**
		200	3	3020	207,0	25	75	101	157	25,0	51	25,0	–	10,3	**PHP 5SPB200TB**
		212	3	3020	219,0	25	75	101	169	25,0	51	25,0	–	12,2	**PHP 5SPB212TB**
		224	3	3020	231,0	25	75	101	181	25,0	51	25,0	–	13,7	**PHP 5SPB224TB**
		236	3	3535	243,0	35	90	101	193	6,0	89	6,0	–	15,9	**PHP 5SPB236TB**
		250	3	3535	257,0	35	90	101	207	6,0	89	6,0	–	18,6	**PHP 5SPB250TB**
		280	7	3535	287,0	35	90	101	237	6,0	89	6,0	170	21,4	**PHP 5SPB280TB**
		300	5	3535	307,0	35	90	101	257	6,0	89	6,0	170	22,5	**PHP 5SPB300TB**
		315	5	3535	322,0	35	90	101	272	6,0	89	6,0	170	22,3	**PHP 5SPB315TB**
		335	5	3535	342,0	35	90	101	292	6,0	89	6,0	170	24,0	**PHP 5SPB335TB**
		355	4	3535	362,0	35	90	101	312	6,0	89	6,0	170	25,5	**PHP 5SPB355TB**
		400	5	3535	407,0	35	90	101	357	6,0	89	6,0	170	30,2	**PHP 5SPB400TB**
		450	5	3535	457,0	35	90	101	407	–	89	12,0	170	32,8	**PHP 5SPB450TB**
		500	5	3535	507,0	35	90	101	457	–	89	12,0	170	36,7	**PHP 5SPB500TB**
		530	5	3525	537,0	35	90	101	487	–	89	12,0	170	39,2	**PHP 5SPB530TB**
		560	4	4040	567,0	40	100	101	517	–	102	1,0	200	45,6	**PHP 5SPB560TB**
		630	4	4040	637,0	40	100	101	587	–	102	1,0	200	50,0	**PHP 5SPB630TB**
		710	4	4040	717,0	40	100	101	664	–	102	1,0	200	63,5	**PHP 5SPB710TB**
		800	4	4040	807,0	40	100	101	754	–	102	1,0	200	67,0	**PHP 5SPB800TB**
		900	4	4040	907,0	40	100	101	854	–	114	1,0	200	103,0	**PHP 5SPB900TB**
		1 000	4	4545	1 007,0	55	110	101	954	6,5	114	6,5	225	110,0	**PHP 5SPB1000TB**
		1 250	4	4545	1 257,0	55	110	101	1 204	6,5	114	6,5	225	180,0	**PHP 5SPB1250TB**
SPB	**6**	125	3	2012	132,0	14	50	120	83	44,0	32	44,0	–	4,2	**PHP 6SPB125TB**
		132	3	2012	139,0	14	50	120	90	44,0	32	44,0	–	4,5	**PHP 6SPB132TB**
		140	3	2517	147,0	16	60	120	97	37,5	45	37,5	–	4,7	**PHP 6SPB140TB**
		150	3	2517	157,0	16	60	120	107	37,5	45	37,5	–	6,5	**PHP 6SPB150TB**
		160	3	3020	167,0	25	75	120	117	34,5	51	34,5	–	5,9	**PHP 6SPB160TB**
		170	3	3020	177,0	25	75	120	127	34,5	51	34,5	–	7,6	**PHP 6SPB170TB**
		180	3	3020	187,0	25	75	120	137	34,5	51	34,5	–	8,9	**PHP 6SPB180TB**
		190	3	3020	197,0	25	75	120	147	34,5	51	34,5	–	10,2	**PHP 6SPB190TB**
		200	3	3020	207,0	25	75	120	157	34,5	51	34,5	–	11,7	**PHP 6SPB200TB**
		212	3	3535	219,0	35	90	120	169	15,5	89	15,5	–	13,2	**PHP 6SPB212TB**
		224	3	3535	231,0	35	90	120	181	15,5	89	15,5	–	15,2	**PHP 6SPB224TB**
		236	3	3535	243,0	35	90	120	193	15,5	89	15,5	–	17,6	**PHP 6SPB236TB**
		250	3	3535	257,0	35	90	120	207	15,5	89	15,5	–	20,2	**PHP 6SPB250TB**
		280	7	3535	287,0	35	90	120	237	15,5	89	15,5	191	23,5	**PHP 6SPB280TB**
		300	5	3535	307,0	35	90	120	257	15,5	89	15,5	191	24,0	**PHP 6SPB300TB**
		315	5	3535	322,0	35	90	120	272	15,5	89	15,5	191	24,1	**PHP 6SPB315TB**
		335	5	3535	342,0	35	90	120	292	15,5	89	15,5	191	26,0	**PHP 6SPB335TB**
		355	5	3535	362,0	35	90	120	312	15,5	89	15,5	191	28,3	**PHP 6SPB355TB**
		400	5	3535	407,0	35	90	120	357	15,5	89	15,5	191	31,8	**PHP 6SPB400TB**
		450	5	4040	457,0	40	100	120	407	–	102	18,0	191	35,3	**PHP 6SPB450TB**
		500	5	4040	507,0	40	100	120	457	–	102	18,0	191	40,7	**PHP 6SPB500TB**
		560	5	4040	567,0	40	100	120	517	–	102	18,0	191	49,2	**PHP 6SPB560TB**

* Mass does not include bushings.
Non-functional dimensions may vary slightly.

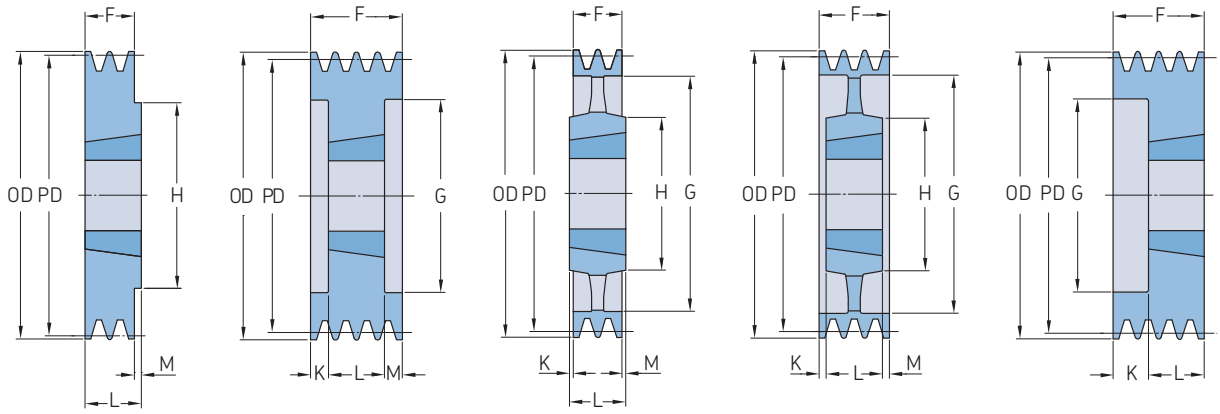

Section	Number of grooves	Pitch diameter PD	Pulley type	Bushing number	Dimensions Outer diameter OD	B Min.	B Max.	F	G	K	L	M	H	Mass*	Designation
–	–	mm	–	–	mm									kg	–
SPB	**6**	630	5	4040	637,0	40	100	120	587	–	102	18,0	191	53,5	**PHP 6SPB630TB**
		710	5	4040	717,0	40	100	120	664	9,0	102	9,0	240	69,0	**PHP 6SPB710TB**
		800	5	4545	807,0	55	110	120	754	3,0	114	3,0	240	84,5	**PHP 6SPB800TB**
		900	5	4545	907,0	55	110	120	854	3,0	114	3,0	240	94,5	**PHP 6SPB900TB**
		1 000	5	4545	1 007,0	55	110	120	954	3,0	114	3,0	240	104,0	**PHP 6SPB1000TB**
		1 250	5	4545	1 257,0	55	110	120	1 204	3,0	127	3,0	240	210,0	**PHP 6SPB1250TB**
SPB	**8**	140	3	2517	147,0	16	60	158	97	56,5	45	56,5	–	6,8	**PHP 8SPB140TB**
		160	3	3020	167,0	25	75	158	117	53,5	51	53,5	–	8,3	**PHP 8SPB160TB**
		170	3	3030	177,0	35	75	158	127	41,0	76	41,0	–	9,5	**PHP 8SPB170TB**
		180	3	3030	187,0	35	75	158	137	41,0	76	41,0	–	10,8	**PHP 8SPB180TB**
		190	3	3030	197,0	35	75	158	147	41,0	76	41,0	–	12,3	**PHP 8SPB190TB**
		200	3	3535	207,0	35	90	158	157	34,5	89	34,5	–	13,7	**PHP 8SPB200TB**
		212	3	3535	219,0	35	90	158	169	34,5	89	34,5	–	15,8	**PHP 8SPB212TB**
		224	3	3535	231,0	35	90	158	181	34,5	89	34,5	–	17,9	**PHP 8SPB224TB**
		236	3	3535	243,0	35	90	158	193	34,5	89	34,5	–	20,0	**PHP 8SPB236TB**
		250	3	3535	257,0	35	90	158	207	34,5	89	34,5	–	23,2	**PHP 8SPB250TB**
		280	7	3535	287,0	35	90	158	237	34,5	89	34,5	–	26,6	**PHP 8SPB280TB**
		300	7	3535	307,0	35	90	158	257	34,5	89	34,5	170	27,3	**PHP 8SPB300TB**
		315	7	3535	322,0	35	90	158	272	34,5	89	34,5	170	28,0	**PHP 8SPB315TB**
		335	7	3535	342,0	35	90	158	292	34,5	89	34,5	170	30,5	**PHP 8SPB335TB**
		355	7	3535	362,0	35	90	158	312	34,5	89	34,5	170	31,5	**PHP 8SPB355TB**
		400	5	4040	407,0	40	100	158	357	28,0	102	28,0	200	43,0	**PHP 8SPB400TB**
		450	5	4040	457,0	40	100	158	407	28,0	102	28,0	200	46,0	**PHP 8SPB450TB**
		500	5	4040	507,0	40	100	158	457	28,0	102	28,0	200	52,0	**PHP 8SPB500TB**
		560	5	4545	567,0	55	110	158	517	22,0	114	22,0	225	54,5	**PHP 8SPB560TB**
		630	5	4545	637,0	55	110	158	587	22,0	114	22,0	225	67,0	**PHP 8SPB630TB**
		710	5	4545	717,0	55	110	158	664	22,0	114	22,0	225	75,5	**PHP 8SPB710TB**
		800	5	4545	807,0	55	110	158	754	22,0	114	22,0	225	94,5	**PHP 8SPB800TB**
		900	5	4545	907,0	55	110	158	854	22,0	114	22,0	225	113,5	**PHP 8SPB900TB**
		1 000	5	5050	1 007,0	70	125	158	954	15,5	127	15,5	245	121,5	**PHP 8SPB1000TB**
		1 250	5	5050	1 257,0	70	125	158	1 204	15,5	127	15,5	245	242,0	**PHP 8SPB1250TB**
SPB	**10**	224	3	3535	231,0	35	90	196	181	53,5	89	53,5	–	20,5	**PHP 10SPB224TB**
		236	3	3535	243,0	35	90	196	193	53,5	89	53,5	–	22,6	**PHP 10SPB236TB**
		250	3	3535	257,0	35	90	196	207	53,5	89	53,5	–	26,6	**PHP 10SPB250TB**
		280	6	3535	287,0	35	90	196	237	53,5	89	53,5	-	27,8	**PHP 10SPB280TB**
		315	7	3535	322,0	35	90	196	272	53,5	89	53,5	170	28,8	**PHP 10SPB315TB**
		335	5	4040	342,0	40	100	196	292	47,0	102	47,0	200	32,0	**PHP 10SPB335TB**
		355	5	4040	362,0	40	100	196	312	47,0	102	47,0	200	33,5	**PHP 10SPB355TB**
		400	5	4040	407,0	40	100	196	357	47,0	102	47,0	200	36,0	**PHP 10SPB400TB**
		450	5	4545	457,0	55	110	196	407	41,0	114	41,0	225	47,0	**PHP 10SPB450TB**
		500	5	4545	507,0	55	110	196	457	41,0	114	41,0	225	55,0	**PHP 10SPB500TB**
		560	5	4545	567,0	55	110	196	517	41,0	114	41,0	225	59,0	**PHP 10SPB560TB**
		630	5	4545	637,0	55	110	196	587	41,0	114	41,0	225	66,0	**PHP 10SPB630TB**
		710	5	4545	717,0	55	125	196	664	41,0	114	41,0	225	75,0	**PHP 10SPB710TB**
		800	5	4545	807,0	55	125	196	754	41,0	114	41,0	225	96,0	**PHP 10SPB800TB**
		900	5	5050	907,0	70	125	196	854	34,5	127	34,5	245	119,0	**PHP 10SPB900TB**
		1 000	5	5050	1 007,0	70	125	196	954	34,5	127	34,5	245	141,0	**PHP 10SPB1000TB**
		1 250	5	5050	1 257,0	70	125	196	1 203	35,0	127	–	–	265,0	**PHP 10SPB1250TB**
SPC	**3**	200	3	2517	209,6	16	60	85	150	20,0	45	20,0	–	10,2	**PHP 3SPC200TB**
		212	3	3020	221,6	25	75	85	162	17,0	51	17,0	–	11,2	**PHP 3SPC212TB**
		224	3	3020	233,6	25	75	85	173	17,0	51	17,0	–	12,7	**PHP 3SPC224TB**
		236	3	3020	245,6	25	75	85	185	17,0	51	17,0	–	14,4	**PHP 3SPC236TB**
		250	3	3020	259,6	25	75	85	194	17,0	51	17,0	–	16,5	**PHP 3SPC250TB**

* Mass does not include bushings.
Non-functional dimensions may vary slightly.

Wedge belt pulleys
SPC taper bushed

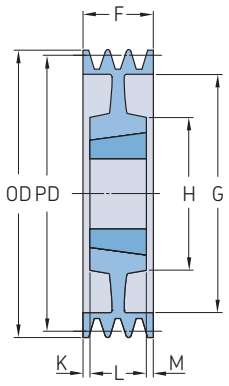

Type 7

Section	Number of grooves	Pitch diameter PD	Pulley type	Bushing number	Dimensions Outer diameter OD	B Min.	B Max.	F	G	K	L	M	H	Mass*	Designation
–	–	mm	–	–	mm									kg	–
SPC	**3**	265	1	3535	274,6	35	90	85	–	–	89	4,0	170	19,7	**PHP 3SPC265TB**
		280	1	3535	289,6	35	90	85	–	–	89	4,0	170	22,7	**PHP 3SPC280TB**
		300	4	3535	309,6	35	90	85	249	2,0	89	2,0	170	22,7	**PHP 3SPC300TB**
		315	7	3535	324,6	35	90	85	264	2,0	89	2,0	170	22,0	**PHP 3SPC315TB**
		335	4	3535	344,6	35	90	85	284	2,0	89	2,0	170	24,1	**PHP 3SPC335TB**
		355	4	3535	364,6	35	90	85	304	2,0	89	2,0	170	26,2	**PHP 3SPC355TB**
		375	4	3535	384,6	35	90	85	324	2,0	89	2,0	170	28,0	**PHP 3SPC375TB**
		400	4	3535	409,6	35	90	85	344	2,0	89	2,0	170	29,3	**PHP 3SPC400TB**
		425	4	3535	434,6	35	90	85	369	2,0	89	2,0	170	32,8	**PHP 3SPC425TB**
		450	4	3535	459,6	35	90	85	394	2,0	89	2,0	170	34,7	**PHP 3SPC450TB**
		475	4	3535	484,6	35	90	85	419	2,0	89	2,0	170	36,5	**PHP 3SPC475TB**
		500	4	3535	509,6	35	90	85	444	2,0	89	2,0	170	40,0	**PHP 3SPC500TB**
		530	4	3535	539,6	35	90	85	474	2,0	89	2,0	170	42,5	**PHP 3SPC530TB**
		560	4	3535	569,6	35	90	85	504	2,0	89	2,0	170	45,9	**PHP 3SPC560TB**
		630	4	4040	639,6	40	100	85	574	8,5	102	8,5	200	76,3	**PHP 3SPC630TB**
		710	4	4040	719,6	70	100	85	654	8,5	102	8,5	200	81,6	**PHP 3SPC710TB**
		800	4	4545	809,6	55	110	85	737	14,5	114	14,5	225	87,0	**PHP 3SPC800TB**
		1 000	4	5050	1 009,6	70	125	85	937	21,0	127	21,0	245	120,0	**PHP 3SPC1000TB**
		1 250	4	5050	1 259,6	70	125	85	1 187	21,0	127	21,0	245	175,0	**PHP 3SPC1250TB**
SPC	**4**	200	3	3020	209,6	25	75	111	144	30,0	51	30,0	–	11,3	**PHP 4SPC200TB**
		212	3	3020	221,6	25	75	111	156	30,0	51	30,0	–	13,0	**PHP 4SPC212TB**
		224	3	3535	233,6	35	90	111	168	11,0	89	11,0	–	14,5	**PHP 4SPC224TB**
		236	3	3535	245,6	35	90	111	180	11,0	89	11,0	–	16,7	**PHP 4SPC236TB**
		250	3	3535	259,6	35	90	111	194	11,0	89	11,0	–	19,3	**PHP 4SPC250TB**
		265	3	3535	274,6	35	90	111	209	11,0	89	11,0	–	22,4	**PHP 4SPC265TB**
		280	7	3535	289,6	35	90	111	224	11,0	89	11,0	–	25,4	**PHP 4SPC280TB**
		300	5	3535	309,6	35	90	111	244	11,0	89	11,0	170	25,4	**PHP 4SPC300TB**
		315	5	3535	324,6	35	90	111	259	11,0	89	11,0	170	25,3	**PHP 4SPC315TB**
		335	5	3535	344,6	35	90	111	279	11,0	89	11,0	170	27,4	**PHP 4SPC335TB**
		355	5	3535	364,6	35	90	111	299	11,0	89	11,0	170	29,6	**PHP 4SPC355TB**
		375	5	3535	384,6	35	90	111	319	11,0	89	11,0	170	31,3	**PHP 4SPC375TB**
		400	5	3535	409,6	35	90	111	344	11,0	89	11,0	170	33,8	**PHP 4SPC400TB**
		425	5	3535	434,6	35	90	111	369	11,0	89	11,0	170	38,0	**PHP 4SPC425TB**
		450	5	3535	459,6	35	90	111	394	11,0	89	11,0	170	41,3	**PHP 4SPC450TB**
		475	5	3535	484,6	35	90	111	419	11,0	89	11,0	170	43,7	**PHP 4SPC475TB**
		500	5	3535	509,6	35	90	111	444	11,0	89	11,0	170	46,0	**PHP 4SPC500TB**
		530	5	4040	539,6	40	100	111	474	4,5	102	4,5	170	52,0	**PHP 4SPC530TB**
		560	5	4040	569,6	40	100	111	504	4,5	102	4,5	200	58,0	**PHP 4SPC560TB**
		630	4	4545	639,6	55	110	111	574	1,5	114	1,5	225	63,8	**PHP 4SPC630TB**
		710	4	5050	719,6	70	125	111	654	8,0	127	8,0	267	83,2	**PHP 4SPC710TB**
		800	4	5050	809,6	70	125	111	737	8,0	127	8,0	267	102,5	**PHP 4SPC800TB**
		1 000	4	5050	1 009,6	70	125	111	937	8,0	127	8,0	267	130,0	**PHP 4SPC1000TB**
		1 250	4	5050	1 259,6	70	125	111	1 187	8,0	127	8,0	267	186,0	**PHP 4SPC1250TB**
SPC	**5**	200	3	3535	209,6	35	90	136	150	23,5	89	23,5	–	12,2	**PHP 5SPC200TB**
		212	3	3535	221,6	35	90	136	160	23,5	89	23,5	–	14,5	**PHP 5SPC212TB**
		224	3	3535	233,6	35	90	136	173	23,5	89	23,5	–	16,6	**PHP 5SPC224TB**
		236	3	3535	245,6	35	90	136	185	23,5	89	23,5	–	18,9	**PHP 5SPC236TB**
		250	3	3535	259,6	35	90	136	198	23,5	89	23,5	–	21,5	**PHP 5SPC250TB**
		265	3	3535	274,6	35	90	136	213	23,5	89	23,5	–	25,0	**PHP 5SPC265TB**
		280	3	3535	289,6	35	90	136	228	23,5	89	23,5	–	28,4	**PHP 5SPC280TB**
		300	7	3535	309,6	35	90	136	247	23,5	89	23,5	170	28,2	**PHP 5SPC300TB**
		315	5	3535	324,6	35	90	136	264	23,5	89	23,5	170	28,1	**PHP 5SPC315TB**
		335	5	3535	344,6	35	90	136	280	23,5	89	23,5	170	31,1	**PHP 5SPC335TB**

* Mass does not include bushings.
Non-functional dimensions may vary slightly.

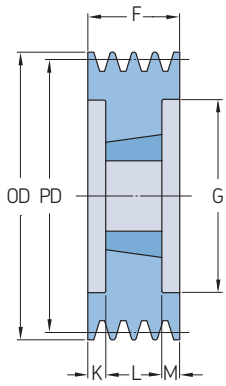

Type 3

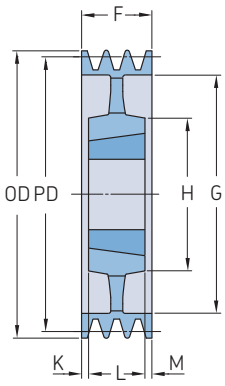

Type 5

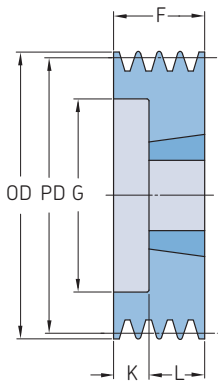

Type 6

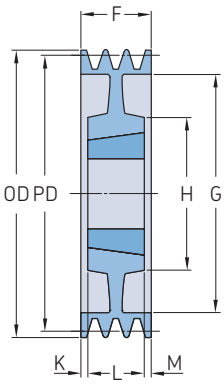

Type 7

Section	Number of grooves	Pitch diameter	Pulley type	Bushing number	Dimensions Outer diameter									Mass*	Designation
		PD			OD	B Min.	Max.	F	G	K	L	M	H		
–	–	mm	–	–	mm									kg	–
SPC	**5**	355	5	3535	364,6	35	90	136	304	23,5	89	23,5	170	33,1	**PHP 5SPC355TB**
		375	5	3535	384,6	35	90	136	324	23,5	89	23,5	170	35,6	**PHP 5SPC375TB**
		400	5	3535	409,6	35	90	136	344	23,5	89	23,5	170	38,5	**PHP 5SPC400TB**
		425	5	3535	434,6	35	90	136	369	23,5	89	23,5	170	42,5	**PHP 5SPC425TB**
		450	5	4040	459,6	40	100	136	394	17,0	102	17,0	200	44,3	**PHP 5SPC450TB**
		475	5	4040	484,6	40	100	136	419	17,0	102	17,0	200	48,5	**PHP 5SPC475TB**
		500	5	4040	509,6	40	100	136	444	17,0	102	17,0	200	51,0	**PHP 5SPC500TB**
		530	5	4545	539,6	55	110	136	474	11,0	102	11,0	200	66,0	**PHP 5SPC530TB**
		560	5	4545	569,6	55	110	136	504	11,0	114	11,0	200	66,7	**PHP 5SPC560TB**
		630	5	5050	639,6	70	125	136	574	4,5	127	4,5	245	73,0	**PHP 5SPC630TB**
		710	5	5050	719,6	70	125	136	654	4,5	127	4,5	245	93,0	**PHP 5SPC710TB**
		800	5	5050	809,6	70	125	136	737	4,5	127	4,5	245	119,0	**PHP 5SPC800TB**
		1 000	5	5050	1 009,6	70	125	136	937	4,5	127	4,5	245	147,0	**PHP 5SPC1000TB**
		1 250	5	5050	1 259,6	70	125	136	1 187	4,5	127	4,5	245	210,0	**PHP 5SPC1250TB**
SPC	**6**	200	3	3535	209,6	35	90	162	148	36,5	89	36,5	–	14,1	**PHP 6SPC200TB**
		212	3	3535	221,6	35	90	162	160	36,5	89	36,5	–	16,5	**PHP 6SPC212TB**
		224	3	3535	233,6	35	90	162	173	36,5	89	36,5	–	18,0	**PHP 6SPC224TB**
		236	3	3535	245,6	35	90	162	185	36,5	89	36,5	–	21,3	**PHP 6SPC236TB**
		250	3	3535	259,6	35	90	162	198	36,5	89	36,5	–	29,0	**PHP 6SPC250TB**
		265	3	3535	274,6	35	90	162	213	36,5	89	36,5	–	30,3	**PHP 6SPC265TB**
		280	7	3535	289,6	35	90	162	228	36,5	89	36,5	–	31,5	**PHP 6SPC280TB**
		300	7	3535	309,6	35	90	162	247	36,5	89	36,5	170	31,5	**PHP 6SPC300TB**
		315	5	3535	324,6	35	90	162	264	36,5	89	36,5	170	33,2	**PHP 6SPC315TB**
		335	5	3535	344,6	35	90	162	280	36,5	89	36,5	170	37,5	**PHP 6SPC335TB**
		355	5	3535	364,6	35	90	162	304	36,5	89	36,5	170	40,5	**PHP 6SPC355TB**
		375	5	4040	384,6	40	100	162	324	30,0	102	30,0	200	44,5	**PHP 6SPC375TB**
		400	5	4040	409,6	40	100	162	348	30,0	102	30,0	200	48,0	**PHP 6SPC400TB**
		425	5	4040	434,6	40	100	162	369	30,0	102	30,0	225	51,0	**PHP 6SPC425TB**
		450	7	4545	459,6	55	110	162	394	24,0	114	24,0	225	57,5	**PHP 6SPC450TB**
		475	5	4545	484,6	55	110	162	419	24,0	114	24,0	225	62,0	**PHP 6SPC475TB**
		500	5	4545	509,6	55	110	162	444	24,0	114	24,0	225	67,0	**PHP 6SPC500TB**
		530	5	5050	539,6	70	125	162	474	17,5	114	17,5	245	74,5	**PHP 6SPC530TB**
		560	5	5050	569,6	70	125	162	504	17,5	127	17,5	245	77,5	**PHP 6SPC560TB**
		630	5	5050	639,6	70	125	162	574	17,5	127	17,5	245	88,5	**PHP 6SPC630TB**
		710	5	5050	719,6	70	125	162	654	17,5	127	17,5	245	107,3	**PHP 6SPC710TB**
		800	5	5050	809,6	70	125	162	737	17,5	127	17,5	245	126,0	**PHP 6SPC800TB**
		1 000	5	5050	1 009,6	70	125	162	937	17,5	127	17,5	245	185,0	**PHP 6SPC1000TB**
		1 250	5	5050	1 259,6	70	125	162	1 187	17,5	127	17,5	245	258,0	**PHP 6SPC1250TB**
SPC	**8**	200	3	3535	209,6	35	90	213	148	62,0	89	62,0	–	20,0	**PHP 8SPC200TB**
		212	3	3535	221,6	35	90	213	160	62,0	89	62,0	–	21,3	**PHP 8SPC212TB**
		224	3	3535	233,6	35	90	213	170	62,0	89	62,0	–	22,9	**PHP 8SPC224TB**
		236	3	3535	245,6	35	90	213	184	62,0	89	62,0	–	25,9	**PHP 8SPC236TB**
		250	3	3535	259,6	35	90	213	198	62,0	89	62,0	–	29,0	**PHP 8SPC250TB**
		265	3	3535	274,6	35	90	213	213	62,0	89	62,0	–	32,5	**PHP 8SPC265TB**
		280	3	3535	289,6	35	90	213	228	62,0	89	62,0	–	36,1	**PHP 8SPC280TB**
		300	3	4040	309,6	40	100	213	207	55,5	102	55,5	–	37,1	**PHP 8SPC300TB**
		315	3	4040	324,6	40	100	213	258	55,5	102	55,5	–	40,0	**PHP 8SPC315TB**
		335	7	4040	344,6	40	100	213	280	55,5	102	55,5	210	44,0	**PHP 8SPC335TB**
		355	5	4040	364,6	40	100	213	304	55,5	102	55,5	210	49,0	**PHP 8SPC355TB**
		375	5	4545	384,6	55	110	213	324	49,5	114	49,5	242	54,5	**PHP 8SPC375TB**
		400	5	4545	409,6	55	110	213	348	49,5	114	49,5	242	58,0	**PHP 8SPC400TB**
		425	5	4545	434,6	55	110	213	369	49,5	114	49,5	242	63,5	**PHP 8SPC425TB**
		450	5	5050	459,6	70	125	213	394	43,0	127	43,0	267	70,0	**PHP 8SPC450TB**

* Mass does not include bushings.
Non-functional dimensions may vary slightly.

Section	Number of grooves	Pitch diameter	Pulley type	Bushing number	Dimensions Outer diameter									Mass*	Designation
		PD			OD	B Min.	Max.	F	G	K	L	M	H		
–	–	mm	–	–	mm									kg	–
SPC	**8**	475	5	5050	484,6	70	125	213	419	43,0	127	43,0	267	72,0	**PHP 8SPC475TB**
		500	5	5050	509,6	70	125	213	444	43,0	127	43,0	267	82,5	**PHP 8SPC500TB**
		530	5	5050	539,6	70	125	213	474	43,0	127	43,0	267	82,5	**PHP 8SPC530TB**
		560	5	5050	569,6	70	125	213	504	43,0	127	43,0	267	94,5	**PHP 8SPC560TB**
		630	5	5050	639,6	70	125	213	574	43,0	127	43,0	267	102,0	**PHP 8SPC630TB**
		710	5	5050	719,6	70	125	213	656	43,0	127	43,0	267	123,5	**PHP 8SPC710TB**
		800	5	5050	809,6	70	125	213	737	43,0	127	43,0	267	145,0	**PHP 8SPC800TB**
		1 000	5	5050	1 009,6	70	125	213	937	43,0	127	43,0	267	207,0	**PHP 8SPC1000TB**
		1 250	5	5050	1 259,6	70	125	213	1 187	43,0	127	43,0	267	285,0	**PHP 8SPC1250TB**
SPC	**10**	224	3	4040	233,6	40	100	264	168	81,0	102	–	–	28,0	**PHP 10SPC224TB**
		236	3	4040	245,6	40	100	264	180	81,0	102	81,0	–	30,9	**PHP 10SPC236TB**
		250	3	4040	259,6	40	100	264	196	81,0	102	81,0	–	35,0	**PHP 10SPC250TB**
		265	3	4040	274,6	40	100	264	209	81,0	102	81,0	–	39,5	**PHP 10SPC265TB**
		280	3	4040	289,6	40	100	264	226	81,0	102	81,0	–	42,1	**PHP 10SPC280TB**
		300	3	4545	309,6	55	110	264	245	75,0	114	75,0	–	44,1	**PHP 10SPC300TB**
		315	3	4545	324,6	55	110	264	258	75,0	114	75,0	–	47,0	**PHP 10SPC315TB**
		335	3	4545	344,6	55	110	264	279	75,0	114	75,0	–	51,0	**PHP 10SPC335TB**
		355	3	4545	364,6	55	110	264	299	75,0	114	75,0	–	57,0	**PHP 10SPC355TB**
		375	3	4545	384,6	55	110	264	319	68,5	127	68,5	245	62,5	**PHP 10SPC375TB**
		400	6	5050	409,6	70	125	264	342	68,5	127	68,5	245	66,0	**PHP 10SPC400TB**
		425	7	5050	434,6	70	125	264	369	68,5	127	68,5	245	70,5	**PHP 10SPC425TB**
		450	5	5050	459,6	70	125	264	394	68,5	127	68,5	245	78,0	**PHP 10SPC450TB**
		475	5	5050	484,6	70	125	264	419	68,5	127	68,5	245	82,0	**PHP 10SPC475TB**
		500	5	5050	509,6	70	125	264	444	68,5	127	68,5	245	95,5	**PHP 10SPC500TB**
		530	5	5050	539,6	70	125	264	474	68,5	127	68,5	245	106,0	**PHP 10SPC530TB**
		560	5	5050	569,6	70	125	264	504	68,5	127	68,5	245	94,7	**PHP 10SPC560TB**
		630	5	5050	639,6	70	125	264	574	68,5	127	68,5	245	113,2	**PHP 10SPC630TB**
		710	5	5050	719,6	70	125	264	654	68,5	127	68,5	245	133,5	**PHP 10SPC710TB**
		800	5	5050	809,6	70	125	264	737	68,5	127	68,5	245	160,5	**PHP 10SPC800TB**
		1 000	5	5050	1 009,6	70	125	264	937	68,5	127	68,5	245	227,5	**PHP 10SPC1000TB**
		1 250	5	5050	1 259,6	70	125	264	1 187	68,5	127	68,5	245	300,0	**PHP 10SPC1250TB**

* Mass does not include bushings.
Non-functional dimensions may vary slightly.

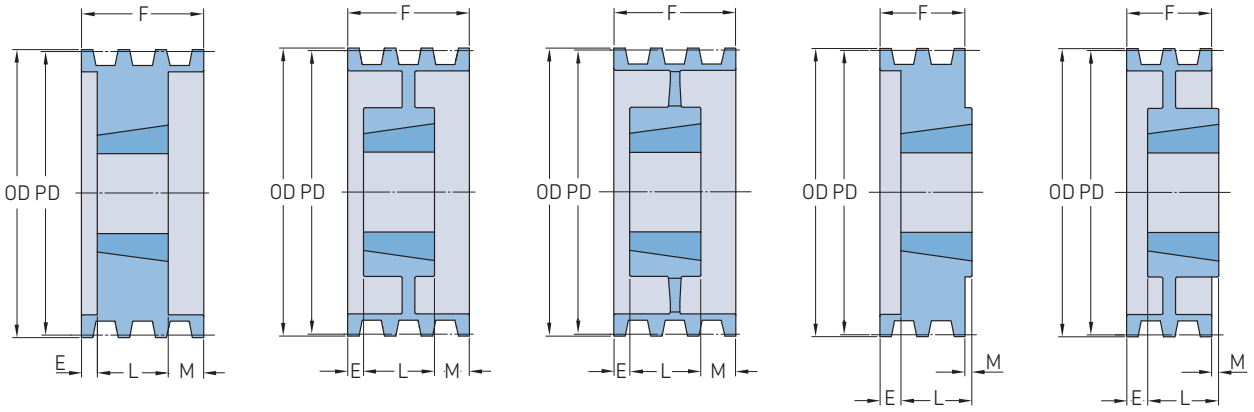

Type A-1 Type A-2 Type A-3 Type B-1 Type B-2

Section	Number of grooves	Pitch diameter Belt A PD		Belt B PD		Pulley type	Bushing number	Dimensions Outer diameter OD	B Min.	Max.	F	E	L	M	Mass[2]	Designation
–	–	mm	in.	mm	in.			mm							kg	
A/B	**1**	76,2	3,0	86,4	3,4	A-1	1210	95,3	15,88	31,75	25,40	–	25,40	–	1,0	**PHP 1-B34TB**
		81,3	3,2	91,4	3,6	A-1	1210	100,3	15,88	31,75	25,40	–	25,40	–	1,2	**PHP 1-B36TB**
		86,4	3,4	96,5	3,8	A-1	1610	105,4	12,70	41,28	25,40	–	25,40	–	1,3	**PHP 1-B38TB**
		91,4	3,6	101,6	4,0	A-1	1610	110,5	12,70	41,28	25,40	–	25,40	–	1,4	**PHP 1-B40TB**
		96,5	3,8	106,7	4,2	A-1	1610	115,6	12,70	41,28	25,40	–	25,40	–	1,6	**PHP 1-B42TB**
		101,6	4,0	111,8	4,4	A-1	1610	120,7	12,70	41,28	25,40	–	25,40	–	1,7	**PHP 1-B44TB**
		106,7	4,2	116,8	4,6	A-1	1610	125,7	12,70	41,28	25,40	–	25,40	–	1,8	**PHP 1-B46TB**
		111,8	4,4	121,9	4,8	A-1	1610	130,8	12,70	41,28	25,40	–	25,40	–	2,0	**PHP 1-B48TB**
		116,8	4,6	127,0	5,0	A-1	1610	135,9	12,70	41,28	25,40	–	25,40	–	2,2	**PHP 1-B50TB**
		121,9	4,8	132,1	5,2	A-1	1610	141,0	12,70	41,28	25,40	–	25,40	–	2,3	**PHP 1-B52TB**
		127,0	5,0	137,2	5,4	A-1	1610	146,1	12,70	41,28	25,40	–	25,40	–	2,5	**PHP 1-B54TB**
		132,1	5,2	142,2	5,6	A-1	1610	151,1	12,70	41,28	25,40	–	25,40	–	2,7	**PHP 1-B56TB**
		137,2	5,4	147,3	5,8	A-1	1610	156,2	12,70	41,28	25,40	–	25,40	–	2,9	**PHP 1-B58TB**
		142,2	5,6	152,4	6,0	A-1	1610	161,3	12,70	41,28	25,40	–	25,40	–	3,0	**PHP 1-B60TB**
		147,3	5,8	157,5	6,2	A-1	1610	166,4	12,70	41,28	25,40	–	25,40	–	3,2	**PHP 1-B62TB**
		152,4	6,0	162,6	6,4	A-1	1610	171,5	12,70	41,28	25,40	–	25,40	–	3,6	**PHP 1-B64TB**
		157,5	6,2	167,6	6,6	A-1	1610	176,5	12,70	41,28	25,40	–	25,40	–	3,9	**PHP 1-B66TB**
		162,6	6,4	172,7	6,8	A-1	1610	181,6	12,70	41,28	25,40	–	25,40	–	4,1	**PHP 1-B68TB**
		177,8	7,0	188,0	7,4	B-1	2517[1]	196,9	19,05	63,50	25,40	–	44,45	19,05	4,3	**PHP 1-B74TB**
		208,3	8,2	218,4	8,6	B-2	2517[1]	227,3	19,05	63,50	25,40	–	44,45	19,05	5,4	**PHP 1-B86TB**
		228,6	9,0	238,8	9,4	B-2	2517[1]	247,7	19,05	63,50	25,40	–	44,45	19,05	6,4	**PHP 1-B94TB**
		269,2	10,6	279,4	11,0	B-2	2517[1]	288,3	19,05	63,50	25,40	–	44,45	19,05	8,2	**PHP 1-B110TB**
		304,8	12,0	315,0	12,4	C-3	2517[1]	323,9	19,05	63,50	25,40	6,35	44,45	12,70	8,4	**PHP 1-B124TB**
		381,0	15,0	391,2	15,4	C-3	2517[1]	400,1	19,05	63,50	25,40	6,35	44,45	12,70	8,6	**PHP 1-B154TB**
		457,2	18,0	467,4	18,4	C-3	2517[1]	476,3	19,05	63,50	28,58	4,76	44,45	11,11	10,9	**PHP 1-B184TB**
A/B	**2**	76,2	3,0	86,4	3,4	A-1	1210	95,3	15,88	31,75	44,45	19,05	25,40	–	1,0	**PHP 2-B34TB**
		81,3	3,2	91,4	3,6	A-1	1210	100,3	15,88	31,75	44,45	19,05	25,40	–	1,2	**PHP 2-B36TB**
		86,4	3,4	96,5	3,8	A-1	1610	105,4	12,70	41,28	44,45	19,05	25,40	–	1,3	**PHP 2-B38TB**
		91,4	3,6	101,6	4,0	A-1	1610	110,5	12,70	41,28	44,45	19,05	25,40	–	1,4	**PHP 2-B40TB**
		96,5	3,8	106,7	4,2	A-1	1610	115,6	12,70	41,28	44,45	19,05	25,40	–	1,8	**PHP 2-B42TB**
		101,6	4,0	111,8	4,4	A-1	1610	120,7	12,70	41,28	44,45	19,05	25,40	–	2,0	**PHP 2-B44TB**
		106,7	4,2	116,8	4,6	A-1	1610	125,7	12,70	41,28	44,45	19,05	25,40	–	2,3	**PHP 2-B46TB**
		111,8	4,4	121,9	4,8	A-1	1610	130,8	12,70	41,28	44,45	19,05	25,40	–	2,5	**PHP 2-B48TB**
		116,8	4,6	127,0	5,0	A-1	1610	135,9	12,70	41,28	44,45	19,05	25,40	–	2,7	**PHP 2-B50TB**
		121,9	4,8	132,1	5,2	A-1	1610	141,0	12,70	41,28	44,45	19,05	25,40	–	3,0	**PHP 2-B52TB**
		127,0	5,0	137,2	5,4	A-1	1610	146,1	12,70	41,28	44,45	19,05	25,40	–	3,2	**PHP 2-B54TB**
		132,1	5,2	142,2	5,6	A-1	1610	151,1	12,70	41,28	44,45	19,05	25,40	–	3,7	**PHP 2-B56TB**
		137,2	5,4	147,3	5,8	A-1	1610	156,2	12,70	41,28	44,45	19,05	25,40	–	3,9	**PHP 2-B58TB**
		142,2	5,6	152,4	6,0	A-1	1610	161,3	12,70	41,28	44,45	19,05	25,40	–	4,0	**PHP 2-B60TB**
		147,3	5,8	157,5	6,2	A-1	1610	166,4	12,70	41,28	44,45	19,05	25,40	–	4,1	**PHP 2-B62TB**
		152,4	6,0	162,6	6,4	A-1	1610	171,5	12,70	41,28	44,45	19,05	25,40	–	4,5	**PHP 2-B64TB**
		157,5	6,2	167,6	6,6	A-1	1610	176,5	12,70	41,28	44,45	19,05	25,40	–	4,8	**PHP 2-B66TB**
		162,6	6,4	172,7	6,8	A-1	1610	181,6	12,70	41,28	44,45	19,05	25,40	–	5,0	**PHP 2-B68TB**
		177,8	7,0	188,0	7,4	A-1	2517[1]	196,9	19,05	63,50	44,45	–	44,45	–	7,3	**PHP 2-B74TB**
		208,3	8,2	218,4	8,6	A-2	2517[1]	227,3	19,05	63,50	44,45	–	44,45	–	8,2	**PHP 2-B86TB**
		228,6	9,0	238,8	9,4	A-2	2517[1]	247,7	19,05	63,50	44,45	–	44,45	–	9,1	**PHP 2-B94TB**
		269,2	10,6	279,4	11,0	A-2	2517[1]	288,3	19,05	63,50	44,45	–	44,45	–	11,3	**PHP 2-B110TB**
		304,8	12,0	315,0	12,4	A-3	2517[1]	323,9	19,05	63,50	44,45	–	44,45	–	12,3	**PHP 2-B124TB**
		381,0	15,0	391,2	15,4	A-3	2517[1]	400,1	19,05	63,50	44,45	–	44,45	–	14,1	**PHP 2-B154TB**
		457,2	18,0	467,4	18,4	A-3	2517[1]	476,3	19,05	63,50	44,45	–	44,45	–	15,0	**PHP 2-B184TB**
		497,8	19,6	508,0	20,0	C-3	3020	516,9	31,75	76,20	44,45	–	50,80	6,35	22,2	**PHP 2-B200TB**
		624,8	24,6	635,0	25,0	C-3	3020	643,9	31,75	76,20	44,45	–	50,80	6,35	29,5	**PHP 2-B250TB**
		751,8	29,6	762,0	30,0	C-3	3020	770,9	31,75	76,20	44,45	–	50,80	6,35	34,0	**PHP 2-B300TB**
		955,0	37,6	965,2	38,0	C-3	3020	974,1	31,75	76,20	44,45	–	50,80	6,35	50,8	**PHP 2-B380TB**

[1] Taper bushing needs to conform to coarse thread series (UNC) of the ASME/ANSI standard. To complete designation, add U before bushing number and bore size at the end of designation, e.g. PHF TBU3535X70MM.
[2] Mass does not include bushings.

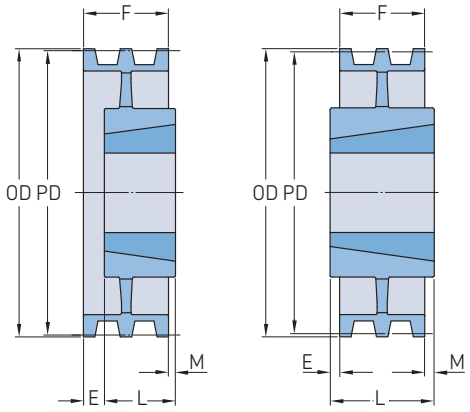

Section	Number of grooves	Pitch diameter Belt A PD		Belt B PD		Pulley type	Bushing number	Dimensions Outer diameter OD	B Min.	Max.	F	E	L	M	Mass[2]	Designation
–	–	mm	in.	mm	in.			mm							kg	
A/B	**3**	76,2	3,0	86,4	3,4	A-1	1210	95,3	15,88	31,75	63,50	38,10	25,40	–	1,4	**PHP 3-B34TB**
		81,3	3,2	91,4	3,6	A-1	1210	100,3	15,88	31,75	63,50	38,10	25,40	–	1,6	**PHP 3-B36TB**
		86,4	3,4	96,5	3,8	A-1	1610	105,4	12,70	41,28	63,50	38,10	25,40	–	1,8	**PHP 3-B38TB**
		91,4	3,6	101,6	4,0	A-1	1610	110,5	12,70	41,28	63,50	38,10	25,40	–	2,3	**PHP 3-B40TB**
		96,5	3,8	106,7	4,2	A-1	1610	115,6	12,70	41,28	63,50	38,10	25,40	–	2,7	**PHP 3-B42TB**
		101,6	4,0	111,8	4,4	A-1	1610	120,7	12,70	41,28	63,50	38,10	25,40	–	3,0	**PHP 3-B44TB**
		106,7	4,2	116,8	4,6	A-1	1610	125,7	12,70	41,28	63,50	38,10	25,40	–	3,2	**PHP 3-B46TB**
		111,8	4,4	121,9	4,8	A-1	1610	130,8	12,70	41,28	63,50	38,10	25,40	–	3,6	**PHP 3-B48TB**
		116,8	4,6	127,0	5,0	A-1	1610	135,9	12,70	41,28	63,50	38,10	25,40	–	3,9	**PHP 3-B50TB**
		121,9	4,8	132,1	5,2	A-1	1610	141,0	12,70	41,28	63,50	38,10	25,40	–	4,1	**PHP 3-B52TB**
		127,0	5,0	137,2	5,4	A-1	2517[1]	146,1	19,05	63,50	63,50	38,10	44,45	–	4,3	**PHP 3-B54TB**
		132,1	5,2	142,2	5,6	A-1	2517[1]	151,1	19,05	63,50	63,50	38,10	44,45	–	4,5	**PHP 3-B56TB**
		137,2	5,4	147,3	5,8	A-1	2517[1]	156,2	19,05	63,50	63,50	19,05	44,45	–	4,8	**PHP 3-B58TB**
		142,2	5,6	152,4	6,0	A-1	2517[1]	161,3	19,05	63,50	63,50	19,05	44,45	–	5,0	**PHP 3-B60TB**
		147,3	5,8	157,5	6,2	A-1	2517[1]	166,4	19,05	63,50	63,50	19,05	44,45	–	5,2	**PHP 3-B62TB**
		152,4	6,0	162,6	6,4	A-1	2517[1]	171,5	19,05	63,50	63,50	19,05	44,45	–	5,4	**PHP 3-B64TB**
		157,5	6,2	167,6	6,6	A-1	2517[1]	176,5	19,05	63,50	63,50	19,05	44,45	–	5,6	**PHP 3-B66TB**
		162,6	6,4	172,7	6,8	A-1	2517[1]	181,6	19,05	63,50	63,50	19,05	44,45	–	5,8	**PHP 3-B68TB**
		177,8	7,0	188,0	7,4	A-1	2517[1]	196,9	19,05	63,50	63,50	19,05	44,45	–	7,3	**PHP 3-B74TB**
		208,3	8,2	218,4	8,6	A-2	2517[1]	227,3	19,05	63,50	63,50	19,05	44,45	–	8,6	**PHP 3-B86TB**
		228,6	9,0	238,8	9,4	A-2	2517[1]	247,7	19,05	63,50	63,50	19,05	44,45	–	9,5	**PHP 3-B94TB**
		269,2	10,6	279,4	11,0	A-2	2517[1]	288,3	19,05	63,50	63,50	19,05	44,45	–	10,9	**PHP 3-B110TB**
		304,8	12,0	315,0	12,4	A-3	2517[1]	323,9	19,05	63,50	63,50	–	44,45	19,05	12,7	**PHP 3-B124TB**
		381,0	15,0	391,2	15,4	A-3	2517[1]	400,1	19,05	63,50	63,50	–	44,45	19,05	13,6	**PHP 3-B154TB**
		457,2	18,0	467,4	18,4	A-3	2517[1]	476,3	19,05	63,50	63,50	–	44,45	19,05	20,0	**PHP 3-B184TB**
		497,8	19,6	508,0	20,0	A-3	3020	516,9	31,75	76,20	63,50	–	50,80	12,70	26,3	**PHP 3-B200TB**
		624,8	24,6	635,0	25,0	A-3	3020	643,9	31,75	76,20	63,50	–	50,80	12,70	33,6	**PHP 3-B250TB**
		751,8	29,6	762,0	30,0	A-3	3020	770,9	31,75	76,20	63,50	–	50,80	12,70	38,1	**PHP 3-B300TB**
		955,0	37,6	965,2	38,0	B-3	3020	974,1	31,75	76,20	63,50	–	76,20	12,70	61,2	**PHP 3-B380TB**
A/B	**4**	76,2	3,0	86,4	3,4	A-1	1210	95,3	15,88	31,75	82,55	57,15	25,40	–	1,4	**PHP 4-B34TB**
		81,3	3,2	91,4	3,6	A-1	1210	100,3	15,88	31,75	82,55	57,15	25,40	–	1,6	**PHP 4-B36TB**
		86,4	3,4	96,5	3,8	A-1	1610	105,4	12,70	41,28	82,55	57,15	25,40	–	1,8	**PHP 4-B38TB**
		91,4	3,6	101,6	4,0	A-1	1610	110,5	12,70	41,28	82,55	57,15	25,40	–	2,3	**PHP 4-B40TB**
		96,5	3,8	106,7	4,2	A-1	1610	115,6	12,70	41,28	82,55	57,15	25,40	–	2,5	**PHP 4-B42TB**
		101,6	4,0	111,8	4,4	A-1	1610	120,7	12,70	41,28	82,55	57,15	25,40	–	2,7	**PHP 4-B44TB**
		106,7	4,2	116,8	4,6	A-1	1610	125,7	12,70	41,28	82,55	57,15	25,40	–	3,2	**PHP 4-B46TB**
		111,8	4,4	121,9	4,8	A-1	1610	130,8	12,70	41,28	82,55	57,15	25,40	–	3,6	**PHP 4-B48TB**
		116,8	4,6	127,0	5,0	A-1	2517[1]	135,9	19,05	63,50	82,55	38,10	44,45	–	3,9	**PHP 4-B50TB**
		121,9	4,8	132,1	5,2	A-1	2517[1]	141,0	19,05	63,50	82,55	38,10	44,45	–	4,1	**PHP 4-B52TB**
		127,0	5,0	137,2	5,4	A-1	2517[1]	146,1	19,05	63,50	82,55	38,10	44,45	–	4,3	**PHP 4-B54TB**
		132,1	5,2	142,2	5,6	A-1	2517[1]	151,1	19,05	63,50	82,55	38,10	44,45	–	4,5	**PHP 4-B56TB**
		137,2	5,4	147,3	5,8	A-1	2517[1]	156,2	19,05	63,50	82,55	38,10	44,45	–	5,4	**PHP 4-B58TB**
		142,2	5,6	152,4	6,0	A-1	2517[1]	161,3	19,05	63,50	82,55	38,10	44,45	–	5,7	**PHP 4-B60TB**
		147,3	5,8	157,5	6,2	A-1	2517[1]	166,4	19,05	63,50	82,55	38,10	44,45	–	5,9	**PHP 4-B62TB**
		152,4	6,0	162,6	6,4	A-1	2517[1]	171,5	19,05	63,50	82,55	38,10	44,45	–	6,4	**PHP 4-B64TB**
		157,5	6,2	167,6	6,6	A-1	2517[1]	176,5	19,05	63,50	82,55	38,10	44,45	–	6,8	**PHP 4-B66TB**
		162,6	6,4	172,7	6,8	A-1	2517[1]	181,6	19,05	63,50	82,55	38,10	44,45	–	7,3	**PHP 4-B68TB**
		177,8	7,0	188,0	7,4	A-1	2517[1]	196,9	19,05	63,50	82,55	38,10	44,45	–	9,1	**PHP 4-B74TB**
		208,3	8,2	218,4	8,6	A-2	2517[1]	227,3	19,05	63,50	82,55	38,10	44,45	–	9,5	**PHP 4-B86TB**
		228,6	9,0	238,8	9,4	A-2	2517[1]	247,7	19,05	63,50	82,55	38,10	44,45	–	10,4	**PHP 4-B94TB**
		269,2	10,6	279,4	11,0	A-2	2517[1]	288,3	19,05	63,50	82,55	38,10	44,45	–	12,7	**PHP 4-B110TB**
		304,8	12,0	315,0	12,4	A-3	2517[1]	323,9	19,05	63,50	82,55	9,53	44,45	28,58	15,4	**PHP 4-B124TB**
		381,0	15,0	391,2	15,4	A-3	2517[1]	400,1	19,05	63,50	82,55	9,53	44,45	28,58	19,1	**PHP 4-B154TB**
		457,2	18,0	467,4	18,4	A-3	2517[1]	476,3	19,05	63,50	82,55	12,70	44,45	25,40	24,0	**PHP 4-B184TB**

[1] Taper bushing needs to conform to coarse thread series (UNC) of the ASME/ANSI standard. To complete designation, add U before bushing number and bore size at the end of designation, e.g. PHF TBU3535X70MM.
[2] Mass does not include bushings.

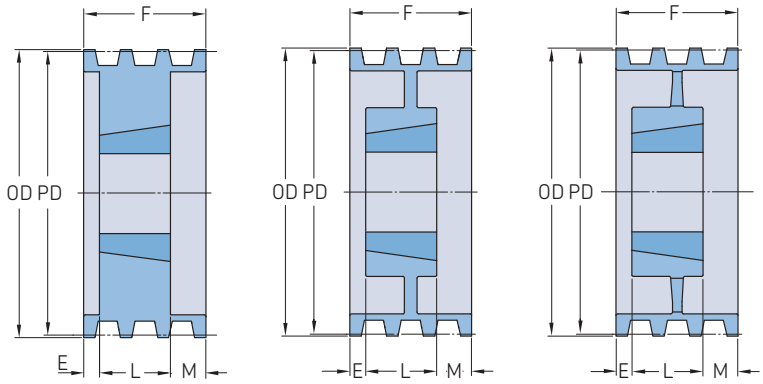

Type A-1 Type A-2 Type A-3

Section	Number of grooves	Pitch diameter Belt A PD		Belt B PD		Pulley type	Bushing number	Dimensions Outer diameter OD	B Min.	Max.	F	E	L	M	Mass[2]	Designation
–	–	mm	in.	mm	in.			mm							kg	
A/B	**4**	497,8	19,6	508,0	20,0	A-3	3020	516,9	31,75	76,20	82,55	12,70	50,80	19,05	28,6	**PHP 4-B200TB**
		624,8	24,6	635,0	25,0	A-3	3030	643,9	31,75	76,20	82,55	–	76,20	31,75	36,3	**PHP 4-B250TB**
		751,8	29,6	762,0	30,0	A-3	3030	770,9	31,75	76,20	82,55	–	76,20	31,75	45,4	**PHP 4-B300TB**
		955,0	37,6	965,2	38,0	A-3	3030	974,1	31,75	76,20	82,55	–	76,20	31,75	64,4	**PHP 4-B380TB**
A/B	**5**	76,2	3,0	86,4	3,4	A-1	1210	95,3	15,88	31,75	101,60	63,50	38,10	–	2,3	**PHP 5-B34TB**
		81,3	3,2	91,4	3,6	A-1	1210	100,3	15,88	31,75	101,60	63,50	38,10	–	2,5	**PHP 5-B36TB**
		86,4	3,4	96,5	3,8	A-1	1215	105,4	15,88	41,28	101,60	63,50	38,10	–	2,7	**PHP 5-B38TB**
		91,4	3,6	101,6	4,0	A-1	1215	110,5	15,88	41,28	101,60	63,50	38,10	–	3,0	**PHP 5-B40TB**
		96,5	3,8	106,7	4,2	A-1	1615	115,6	12,70	41,28	101,60	63,50	38,10	–	3,2	**PHP 5-B42TB**
		101,6	4,0	111,8	4,4	A-1	1615	120,7	12,70	41,28	101,60	63,50	38,10	–	3,6	**PHP 5-B44TB**
		106,7	4,2	116,8	4,6	A-1	1615	125,7	12,70	41,28	101,60	63,50	38,10	–	4,1	**PHP 5-B46TB**
		116,8	4,6	127,0	5,0	A-1	1615	135,9	12,70	41,28	101,60	22,23	38,10	–	4,8	**PHP 5-B50TB**
		121,9	4,8	132,1	5,2	A-1	1615	141,0	12,70	41,28	101,60	22,23	38,10	–	5,1	**PHP 5-B52TB**
		127,0	5,0	137,2	5,4	A-1	2517[1]	146,1	19,05	63,50	101,60	57,15	44,45	–	5,2	**PHP 5-B54TB**
		132,1	5,2	142,2	5,6	A-1	2517[1]	151,1	19,05	63,50	101,60	57,15	44,45	–	5,4	**PHP 5-B56TB**
		142,2	5,6	152,4	6,0	A-1	2517[1]	161,3	19,05	63,50	101,60	57,15	44,45	–	6,4	**PHP 5-B60TB**
		152,4	6,0	162,6	6,4	A-1	2517[1]	171,5	19,05	63,50	101,60	57,15	44,45	–	7,3	**PHP 5-B64TB**
		162,6	6,4	172,7	6,8	A-1	2517[1]	181,6	19,05	63,50	101,60	57,15	44,45	–	8,2	**PHP 5-B68TB**
		177,8	7,0	188,0	7,4	A-1	2517[1]	196,9	19,05	63,50	101,60	57,15	44,45	–	10,0	**PHP 5-B74TB**
		208,3	8,2	218,4	8,6	A-2	2517[1]	227,3	19,05	63,50	101,60	57,15	44,45	–	10,9	**PHP 5-B86TB**
		228,6	9,0	238,8	9,4	A-2	2517[1]	247,7	19,05	63,50	101,60	57,15	44,45	–	11,8	**PHP 5-B94TB**
		269,2	10,6	279,4	11,0	A-2	2517[1]	288,3	19,05	63,50	101,60	57,15	44,45	–	15,9	**PHP 5-B110TB**
		304,8	12,0	315,0	12,4	A-3	2517[1]	323,9	19,05	63,50	101,60	19,05	44,45	38,10	18,1	**PHP 5-B124TB**
		381,0	15,0	391,2	15,4	A-3	2517[1]	400,1	19,05	63,50	101,60	19,05	44,45	38,10	21,3	**PHP 5-B154TB**
		457,2	18,0	467,4	18,4	A-3	2517[1]	476,3	19,05	63,50	101,60	19,05	44,45	38,10	23,6	**PHP 5-B184TB**
		497,8	19,6	508,0	20,0	A-3	3030	516,9	31,75	76,20	101,60	6,35	76,20	19,05	34,0	**PHP 5-B200TB**
		624,8	24,6	635,0	25,0	A-3	3030	643,9	31,75	76,20	101,60	6,35	76,20	19,05	36,7	**PHP 5-B250TB**
		751,8	29,6	762,0	30,0	A-3	3030	770,9	31,75	76,20	101,60	6,35	76,20	19,05	49,4	**PHP 5-B300TB**
		955,0	37,6	965,2	38,0	A-3	3030	974,1	31,75	76,20	101,60	6,35	76,20	19,05	71,7	**PHP 5-B380TB**
A/B	**6**	96,5	3,8	106,7	4,2	A-1	1615	115,6	12,70	41,28	120,65	82,55	38,10	–	3,6	**PHP 6-B42TB**
		101,6	4,0	111,8	4,4	A-1	1615	120,7	12,70	41,28	120,65	82,55	38,10	–	4,1	**PHP 6-B44TB**
		106,7	4,2	116,8	4,6	A-1	1615	125,7	12,70	41,28	120,65	82,55	38,10	–	4,5	**PHP 6-B46TB**
		116,8	4,6	127,0	5,0	A-1	1615	135,9	12,70	41,28	120,65	31,75	38,10	50,80	5,4	**PHP 6-B50TB**
		121,9	4,8	132,1	5,2	A-1	1615	141,0	12,70	41,28	120,65	31,75	38,10	50,80	5,8	**PHP 6-B52TB**
		127,0	5,0	137,2	5,4	A-1	1615	146,1	12,70	41,28	120,65	31,75	38,10	50,80	6,2	**PHP 6-B54TB**
		132,1	5,2	142,2	5,6	A-1	1615	151,1	12,70	41,28	120,65	31,75	38,10	50,80	6,6	**PHP 6-B56TB**
		142,2	5,6	152,4	6,0	A-1	2517[1]	161,3	19,05	63,50	120,65	76,20	44,45	–	7,3	**PHP 6-B60TB**
		152,4	6,0	162,6	6,4	A-1	2517[1]	171,5	19,05	63,50	120,65	76,20	44,45	–	8,9	**PHP 6-B64TB**
		162,6	6,4	172,7	6,8	A-1	2517[1]	181,6	19,05	63,50	120,65	76,20	44,45	–	9,5	**PHP 6-B68TB**
		177,8	7,0	188,0	7,4	A-1	2517[1]	196,9	19,05	63,50	120,65	76,20	44,45	–	11,3	**PHP 6-B74TB**
		208,3	8,2	218,4	8,6	A-2	2517[1]	227,3	19,05	63,50	120,65	76,20	44,45	–	12,3	**PHP 6-B86TB**
		228,6	9,0	238,8	9,4	A-2	2517[1]	247,7	19,05	63,50	120,65	76,20	44,45	–	12,7	**PHP 6-B94TB**
		269,2	10,6	279,4	11,0	A-2	2517[1]	288,3	19,05	63,50	120,65	76,20	44,45	–	15,4	**PHP 6-B110TB**
		304,8	12,0	315,0	12,4	A-3	2517[1]	323,9	19,05	63,50	120,65	28,58	44,45	47,63	19,5	**PHP 6-B124TB**
		381,0	15,0	391,2	15,4	A-3	2517[1]	400,1	19,05	63,50	120,65	38,10	44,45	38,10	23,6	**PHP 6-B154TB**
		457,2	18,0	467,4	18,4	A-3	2517[1]	476,3	19,05	63,50	120,65	38,10	44,45	38,10	28,1	**PHP 6-B184TB**
		497,8	19,6	508,0	20,0	A-3	3030	516,9	31,75	76,20	120,65	12,70	76,20	31,75	38,6	**PHP 6-B200TB**
		624,8	24,6	635,0	25,0	A-3	3030	643,9	31,75	76,20	120,65	12,70	76,20	31,75	45,4	**PHP 6-B250TB**
		751,8	29,6	762,0	30,0	A-3	3030	770,9	31,75	76,20	120,65	12,70	76,20	31,75	62,1	**PHP 6-B300TB**
		955,0	37,6	965,2	38,0	A-3	3030	974,1	31,75	76,20	120,65	12,70	76,20	31,75	76,2	**PHP 6-B380TB**
A/B	**8**	127,0	5,0	137,2	5,4	A-1	2517[1]	146,1	19,05	63,50	158,75	47,63	44,45	66,68	7,3	**PHP 8-B54TB**
		132,1	5,2	142,2	5,6	A-1	2517[1]	151,1	19,05	63,50	158,75	47,63	44,45	66,68	7,7	**PHP 8-B56TB**
		142,2	5,6	152,4	6,0	A-1	2517[1]	161,3	19,05	63,50	158,75	47,63	44,45	66,68	8,6	**PHP 8-B60TB**

[1] Taper bushing needs to conform to coarse thread series (UNC) of the ASME/ANSI standard. To complete designation, add U before bushing number and bore size at the end of designation, e.g. PHF TBU3535X70MM.
[2] Mass does not include bushings.

Section	Number of grooves	Pitch diameter Belt A PD		Belt B PD		Pulley type	Bushing number	Dimensions Outer diameter OD	B Min.	Max.	F	E	L	M	Mass[2]	Designation
–	–	mm	in.	mm	in.			mm							kg	
A/B	**8**	152,4	6,0	162,6	6,4	A-1	2517[1]	171,5	19,05	63,50	158,75	47,63	44,45	66,68	9,5	**PHP 8-B64TB**
		162,6	6,4	172,7	6,8	A-1	2517[1]	181,6	19,05	63,50	158,75	47,63	44,45	66,68	11,3	**PHP 8-B68TB**
		177,8	7,0	188,0	7,4	A-1	2517[1]	196,9	19,05	63,50	158,75	47,63	44,45	66,68	13,2	**PHP 8-B74TB**
		208,3	8,2	218,4	8,6	A-1	3030	227,3	31,75	76,20	158,75	25,40	76,20	57,15	16,8	**PHP 8-B86TB**
		228,6	9,0	238,8	9,4	A-2	3030	252,7	31,75	76,20	158,75	25,40	76,20	57,15	18,6	**PHP 8-B94TB**
		269,2	10,6	279,4	11,0	A-2	3030	288,3	31,75	76,20	158,75	25,40	76,20	57,15	23,1	**PHP 8-B110TB**
		304,8	12,0	315,0	12,4	A-3	3030	323,9	31,75	76,20	158,75	25,40	76,20	57,15	25,4	**PHP 8-B124TB**
		381,0	15,0	391,2	15,4	A-3	3030	400,1	31,75	76,20	158,75	25,40	76,20	57,15	31,3	**PHP 8-B154TB**
		457,2	18,0	467,4	18,4	A-3	3030	476,3	31,75	76,20	158,75	25,40	76,20	57,15	44,9	**PHP 8-B184TB**
		497,8	19,6	508,0	20,0	A-3	3030	516,9	31,75	76,20	158,75	25,40	76,20	57,15	52,2	**PHP 8-B200TB**
		624,8	24,6	635,0	25,0	A-3	3535[1]	643,9	50,80	88,90	158,75	19,05	88,90	50,80	65,8	**PHP 8-B250TB**
		751,8	29,6	762,0	30,0	A-3	3535[1]	770,9	50,80	88,90	158,75	19,05	88,90	50,80	77,1	**PHP 8-B300TB**
		955,0	37,6	965,2	38,0	A-3	4040	974,1	44,45	101,60	158,75	28,58	101,60	28,58	117,9	**PHP 8-B380TB**
A/B	**10**	127,0	5,0	137,2	5,4	A-1	2517[1]	146,1	19,05	63,50	196,85	76,20	44,45	76,20	8,2	**PHP 10-B54TB**
		132,1	5,2	142,2	5,6	A-1	2517[1]	151,1	19,05	63,50	196,85	76,20	44,45	76,20	9,1	**PHP 10-B56TB**
		142,2	5,6	152,4	6,0	A-1	2517[1]	161,3	19,05	63,50	196,85	76,20	44,45	76,20	10,0	**PHP 10-B60TB**
		152,4	6,0	162,6	6,4	A-1	2517[1]	171,5	19,05	63,50	196,85	76,20	44,45	76,20	11,6	**PHP 10-B64TB**
		162,6	6,4	172,7	6,8	A-1	2517[1]	181,6	19,05	63,50	196,85	76,20	44,45	76,20	12,7	**PHP 10-B68TB**
		177,8	7,0	188,0	7,4	A-1	2517[1]	196,9	19,05	63,50	196,85	76,20	44,45	76,20	15,9	**PHP 10-B74TB**
		208,3	8,2	218,4	8,6	A-1	3030	227,3	31,75	76,20	196,85	50,80	76,20	69,85	19,5	**PHP 10-B86TB**
		228,6	9,0	238,8	9,4	A-2	3030	252,7	31,75	76,20	196,85	50,80	76,20	69,85	20,9	**PHP 10-B94TB**
		269,2	10,6	279,4	11,0	A-2	3030	288,3	31,75	76,20	196,85	50,80	76,20	69,85	23,6	**PHP 10-B110TB**

[1] Taper bushing needs to conform to coarse thread series (UNC) of the ASME/ANSI standard. To complete designation, add U before bushing number and bore size at the end of designation, e.g. PHF TBU3535X70MM.
[2] Mass does not include bushings.

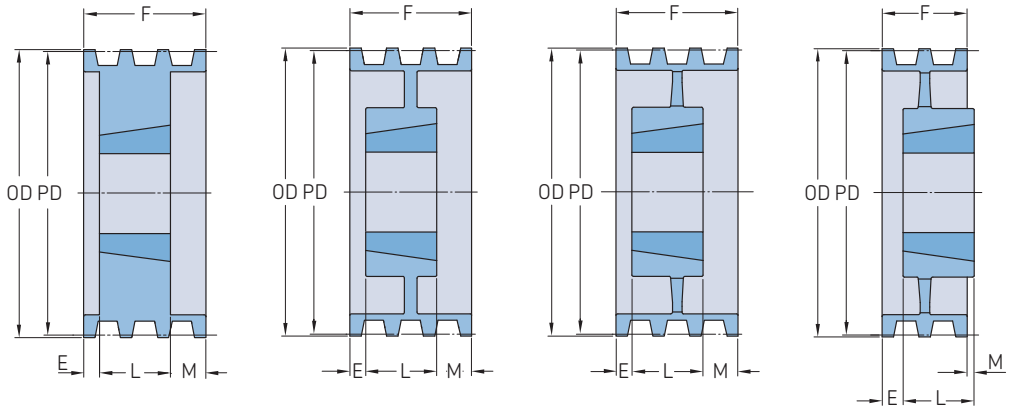

Section	Number of grooves	Pitch diameter PD		Pulley type	Bushing number	Dimensions Outer diameter OD	B Min.	B Max.	F	E	L	M	Mass[2]	Designation
–	–	mm	in.	–	–	mm							kg	–
C	2	177,8	7,0	A-1	2517[1]	188,0	19,05	63,50	60,33	15,88	44,45	–	6,8	**PHP 2-C70TB**
		190,5	7,5	A-1	2517[1]	200,7	19,05	63,50	60,33	15,88	44,45	–	7,7	**PHP 2-C75TB**
		203,2	8,0	A-1	2517[1]	213,4	19,05	63,50	60,33	15,88	44,45	–	9,1	**PHP 2-C80TB**
		215,9	8,5	A-2	2517[1]	226,1	19,05	63,50	60,33	15,88	44,45	–	10,0	**PHP 2-C85TB**
		228,6	9,0	A-2	2517[1]	238,8	19,05	63,50	60,33	15,88	44,45	–	10,4	**PHP 2-C90TB**
		241,3	9,5	A-2	2517[1]	251,5	19,05	63,50	60,33	15,88	44,45	–	10,9	**PHP 2-C95TB**
		254,0	10,0	A-2	2517[1]	264,2	19,05	63,50	60,33	15,88	44,45	–	11,3	**PHP 2-C100TB**
		266,7	10,5	A-2	2517[1]	276,9	19,05	63,50	60,33	15,88	44,45	–	11,8	**PHP 2-C105TB**
		279,4	11,0	A-2	2517[1]	289,6	19,05	63,50	60,33	15,88	44,45	–	12,3	**PHP 2-C110TB**
		304,8	12,0	A-2	2517[1]	315,0	19,05	63,50	60,33	15,88	44,45	–	15,0	**PHP 2-C120TB**
		330,2	13,0	A-3	2517[1]	340,4	19,05	63,50	60,33	15,88	44,45	–	15,9	**PHP 2-C130TB**
		355,6	14,0	A-3	2517[1]	365,8	19,05	63,50	60,33	15,88	44,45	–	16,3	**PHP 2-C140TB**
		406,4	16,0	A-3	2517[1]	416,6	19,05	63,50	60,33	15,88	44,45	–	19,1	**PHP 2-C160TB**
		457,2	18,0	A-3	3020	467,4	31,75	76,20	60,33	–	50,80	9,53	19,1	**PHP 2-C180TB**
		508,0	20,0	A-3	3020	518,2	31,75	76,20	60,33	–	50,80	9,53	20,4	**PHP 2-C200TB**
		609,6	24,0	A-3	3020	619,8	31,75	76,20	60,33	–	50,80	9,53	32,7	**PHP 2-C240TB**
C	3	177,8	7,0	A-1	2517[1]	188,0	19,05	63,50	85,73	6,35	44,45	34,93	8,2	**PHP 3-C70TB**
		190,5	7,5	A-1	2517[1]	200,7	19,05	63,50	85,73	6,35	44,45	34,93	9,1	**PHP 3-C75TB**
		203,2	8,0	A-1	2517[1]	213,4	19,05	63,50	85,73	6,35	44,45	34,93	10,0	**PHP 3-C80TB**
		215,9	8,5	A-2	2517[1]	226,1	19,05	63,50	85,73	6,35	44,45	34,93	10,4	**PHP 3-C85TB**
		228,6	9,0	A-2	2517[1]	238,8	19,05	63,50	85,73	6,35	44,45	34,93	10,9	**PHP 3-C90TB**
		241,3	9,5	A-2	2517[1]	251,5	19,05	63,50	85,73	6,35	44,45	34,93	12,3	**PHP 3-C95TB**
		254,0	10,0	A-2	2517[1]	264,2	19,05	63,50	85,73	6,35	44,45	34,93	13,2	**PHP 3-C100TB**
		266,7	10,5	A-2	2517[1]	276,9	19,05	63,50	85,73	6,35	44,45	34,93	14,5	**PHP 3-C105TB**
		279,4	11,0	A-2	2517[1]	289,6	19,05	63,50	85,73	6,35	44,45	34,93	15,9	**PHP 3-C110TB**
		304,8	12,0	A-2	3020	315,0	31,75	76,20	85,73	–	50,80	34,93	20,0	**PHP 3-C120TB**
		330,2	13,0	A-3	3020	340,4	31,75	76,20	85,73	–	50,80	34,93	22,2	**PHP 3-C130TB**
		355,6	14,0	A-3	3020	365,8	31,75	76,20	85,73	–	50,80	34,93	22,7	**PHP 3-C140TB**
		406,4	16,0	A-3	3020	416,6	31,75	76,20	85,73	–	50,80	34,93	29,0	**PHP 3-C160TB**
		457,2	18,0	A-3	3030	467,4	31,75	76,20	85,73	–	76,20	9,53	29,0	**PHP 3-C180TB**
		508,0	20,0	A-3	3030	518,2	31,75	76,20	85,73	–	76,20	9,53	35,4	**PHP 3-C200TB**
		609,6	24,0	A-3	3030	619,8	31,75	76,20	85,73	–	76,20	9,53	43,5	**PHP 3-C240TB**
		762,0	30,0	B-3	3535[1]	772,2	50,80	88,90	85,73	–	88,90	3,18	56,7	**PHP 3-C300TB**
		914,4	36,0	B-3	3535[1]	924,6	50,80	88,90	85,73	–	88,90	3,18	79,4	**PHP 3-C360TB**
C	4	177,8	7,0	A-1	2517[1]	188,0	19,05	63,50	111,13	12,70	44,45	53,98	9,1	**PHP 4-C70TB**
		190,5	7,5	A-1	2517[1]	200,7	19,05	63,50	111,13	12,70	44,45	53,98	10,4	**PHP 4-C75TB**
		203,2	8,0	A-1	2517[1]	213,4	19,05	63,50	111,13	12,70	44,45	53,98	11,3	**PHP 4-C80TB**
		215,9	8,5	A-2	2517[1]	226,1	19,05	63,50	111,13	12,70	44,45	53,98	11,8	**PHP 4-C85TB**
		228,6	9,0	A-2	2517[1]	238,8	19,05	63,50	111,13	12,70	44,45	53,98	12,3	**PHP 4-C90TB**
		241,3	9,5	A-2	2517[1]	251,5	19,05	63,50	111,13	12,70	44,45	53,98	16,3	**PHP 4-C95TB**
		254,0	10,0	A-2	2517[1]	264,2	19,05	63,50	111,13	12,70	44,45	53,98	17,7	**PHP 4-C100TB**
		266,7	10,5	A-2	2517[1]	276,9	19,05	63,50	111,13	12,70	44,45	53,98	19,1	**PHP 4-C105TB**
		279,4	11,0	A-2	2517[1]	289,6	19,05	63,50	111,13	12,70	44,45	53,98	20,4	**PHP 4-C110TB**
		304,8	12,0	A-2	2517[1]	315,0	19,05	76,20	111,13	–	76,20	34,93	21,3	**PHP 4-C120TB**
		330,2	13,0	A-3	3030	340,4	31,75	76,20	111,13	–	76,20	34,93	23,1	**PHP 4-C130TB**
		355,6	14,0	A-3	3030	365,8	31,75	76,20	111,13	–	76,20	34,93	24,5	**PHP 4-C140TB**
		406,4	16,0	A-3	3030	416,6	31,75	76,20	111,13	–	76,20	34,93	32,2	**PHP 4-C160TB**
		457,2	18,0	A-3	3030	467,4	31,75	76,20	111,13	–	76,20	34,93	36,7	**PHP 4-C180TB**
		508,0	20,0	A-3	3030	518,2	31,75	76,20	111,13	–	76,20	34,93	38,1	**PHP 4-C200TB**
		609,6	24,0	A-3	3030	619,8	31,75	76,20	111,13	–	76,20	34,93	52,6	**PHP 4-C240TB**
		762,0	30,0	A-3	3535[1]	772,2	50,80	88,90	111,13	–	88,90	22,23	74,4	**PHP 4-C300TB**
		914,4	36,0	A-3	3535[1]	924,6	50,80	88,90	111,13	–	88,90	22,23	87,1	**PHP 4-C360TB**
		1117,6	44,0	A-3	4040	1127,8	44,45	101,60	111,13	–	101,60	9,53	127,9	**PHP 4-C440TB**

[1] Taper bushing needs to conform to coarse thread series (UNC) of the ASME/ANSI standard. To complete designation, add U before bushing number and bore size at the end of designation, e.g. PHF TBU3535X70MM.
[2] Mass does not include bushings.

Section	Number of grooves	Pitch diameter PD		Pulley type	Bushing number	Dimensions Outer diameter OD	B Min.	B Max.	F	E	L	M	Mass[2]	Designation
–	–	mm	in.	–	–	mm							kg	–
C	5	177,8	7,0	A-1	2517[1]	188,0	19,05	63,50	136,53	38,10	44,45	53,98	10,4	**PHP 5-C70TB**
		190,5	7,5	A-1	2517[1]	200,7	19,05	63,50	136,53	38,10	44,45	53,98	11,8	**PHP 5-C75TB**
		203,2	8,0	A-1	2517[1]	213,4	19,05	63,50	136,53	38,10	44,45	53,98	13,6	**PHP 5-C80TB**
		215,9	8,5	A-1	2517[1]	226,1	19,05	63,50	136,53	38,10	44,45	53,98	15,4	**PHP 5-C85TB**
		228,6	9,0	A-2	2517[1]	238,8	19,05	63,50	136,53	38,10	44,45	53,98	15,9	**PHP 5-C90TB**
		241,3	9,5	A-2	2517[1]	251,5	19,05	63,50	136,53	38,10	44,45	53,98	16,3	**PHP 5-C95TB**
		254,0	10,0	A-2	2517[1]	264,2	19,05	63,50	136,53	38,10	44,45	53,98	17,7	**PHP 5-C100TB**
		266,7	10,5	A-2	2517[1]	276,9	19,05	63,50	136,53	38,10	44,45	53,98	19,1	**PHP 5-C105TB**
		279,4	11,0	A-2	2517[1]	289,6	19,05	63,50	136,53	38,10	44,45	53,98	19,5	**PHP 5-C110TB**
		304,8	12,0	A-2	3030	315,0	31,75	76,20	136,53	12,70	76,20	47,63	26,3	**PHP 5-C120TB**
		330,2	13,0	A-3	3030	340,4	31,75	76,20	136,53	12,70	76,20	47,63	28,6	**PHP 5-C130TB**
		355,6	14,0	A-3	3030	365,8	31,75	76,20	136,53	12,70	76,20	47,63	29,5	**PHP 5-C140TB**
		406,4	16,0	A-3	3030	416,6	31,75	76,20	136,53	12,70	76,20	47,63	31,8	**PHP 5-C160TB**
		457,2	18,0	A-3	3030	467,4	31,75	76,20	136,53	12,70	76,20	47,63	37,7	**PHP 5-C180TB**
		508,0	20,0	A-3	3535[1]	518,2	50,80	88,90	136,53	–	88,90	47,63	49,9	**PHP 5-C200TB**
		609,6	24,0	A-3	3535[1]	619,8	50,80	88,90	136,53	–	88,90	47,63	62,6	**PHP 5-C240TB**
		762,0	30,0	A-3	3535[1]	772,2	50,80	88,90	136,53	–	88,90	47,63	79,8	**PHP 5-C300TB**
		914,4	36,0	A-3	4040	924,6	44,45	101,60	136,53	6,35	101,60	28,58	110,7	**PHP 5-C360TB**
		1117,6	44,0	A-3	4040	1127,8	44,45	101,60	136,53	6,35	101,60	28,58	130,6	**PHP 5-C440TB**
C	6	177,8	7,0	A-1	3030	188,0	31,75	76,20	161,93	25,40	76,20	60,33	13,6	**PHP 6-C70TB**
		190,5	7,5	A-1	3030	200,7	31,75	76,20	161,93	25,40	76,20	60,33	14,1	**PHP 6-C75TB**
		203,2	8,0	A-1	3030	213,4	31,75	76,20	161,93	25,40	76,20	60,33	15,9	**PHP 6-C80TB**
		215,9	8,5	A-1	3030	226,1	31,75	76,20	161,93	25,40	76,20	60,33	18,1	**PHP 6-C85TB**
		228,6	9,0	A-1	3030	238,8	31,75	76,20	161,93	25,40	76,20	60,33	21,3	**PHP 6-C90TB**
		241,3	9,5	A-1	3030	251,5	31,75	76,20	161,93	25,40	76,20	60,33	24,0	**PHP 6-C95TB**
		254,0	10,0	A-1	3030	264,2	31,75	76,20	161,93	25,40	76,20	60,33	25,9	**PHP 6-C100TB**
		266,7	10,5	A-2	3030	276,9	31,75	76,20	161,93	25,40	76,20	60,33	26,3	**PHP 6-C105TB**
		279,4	11,0	A-2	3030	289,6	31,75	76,20	161,93	25,40	76,20	60,33	29,9	**PHP 6-C110TB**
		304,8	12,0	A-2	3030	315,0	31,75	76,20	161,93	25,40	76,20	60,33	31,8	**PHP 6-C120TB**
		330,2	13,0	A-3	3030	340,4	31,75	76,20	161,93	25,40	76,20	60,33	34,0	**PHP 6-C130TB**
		355,6	14,0	A-3	3535[1]	365,8	50,80	88,90	161,93	12,70	88,90	60,33	36,3	**PHP 6-C140TB**
		406,4	16,0	A-3	3535[1]	416,6	50,80	88,90	161,93	12,70	88,90	60,33	39,5	**PHP 6-C160TB**
		457,2	18,0	A-3	3535[1]	467,4	50,80	88,90	161,93	12,70	88,90	60,33	46,3	**PHP 6-C180TB**
		508,0	20,0	A-3	3535[1]	518,2	50,80	88,90	161,93	12,70	88,90	60,33	57,2	**PHP 6-C200TB**
		609,6	24,0	A-3	3535[1]	619,8	50,80	88,90	161,93	12,70	88,90	60,33	68,0	**PHP 6-C240TB**
		762,0	30,0	A-3	4040	772,2	44,45	101,60	161,93	25,40	101,60	34,93	102,5	**PHP 6-C300TB**
		914,4	36,0	A-3	4040	924,6	44,45	101,60	161,93	25,40	101,60	34,93	122,5	**PHP 6-C360TB**
		1117,6	44,0	A-3	4040	1127,8	44,45	101,60	161,93	25,40	101,60	34,93	145,2	**PHP 6-C440TB**
C	8	203,2	8,0	A-1	3030	213,4	31,75	76,20	212,73	50,80	76,20	85,73	20,4	**PHP 8-C80TB**
		215,9	8,5	A-1	3030	226,1	31,75	76,20	212,73	50,80	76,20	85,73	21,3	**PHP 8-C85TB**
		228,6	9,0	A-1	3535[1]	238,8	50,80	88,90	212,73	38,10	88,90	85,73	29,0	**PHP 8-C90TB**
		241,3	9,5	A-1	3535[1]	251,5	50,80	88,90	212,73	38,10	88,90	85,73	30,4	**PHP 8-C95TB**
		254,0	10,0	A-1	3535[1]	264,2	50,80	88,90	212,73	38,10	88,90	85,73	31,8	**PHP 8-C100TB**
		266,7	10,5	A-1	3535[1]	276,9	50,80	88,90	212,73	38,10	88,90	85,73	38,1	**PHP 8-C105TB**
		279,4	11,0	A-1	3535[1]	289,6	50,80	88,90	212,73	38,10	88,90	85,73	39,5	**PHP 8-C110TB**
		304,8	12,0	A-2	3535[1]	315,0	50,80	88,90	212,73	38,10	88,90	85,73	40,8	**PHP 8-C120TB**
		330,2	13,0	A-2	3535[1]	340,4	50,80	88,90	212,73	38,10	88,90	85,73	44,0	**PHP 8-C130TB**
		355,6	14,0	A-2	3535[1]	365,8	50,80	88,90	212,73	38,10	88,90	85,73	47,6	**PHP 8-C140TB**
		406,4	16,0	A-3	3535[1]	416,6	50,80	88,90	212,73	38,10	88,90	85,73	52,2	**PHP 8-C160TB**
		457,2	18,0	A-3	4040	467,4	44,45	101,60	212,73	38,10	101,60	73,03	62,1	**PHP 8-C180TB**
		508,0	20,0	A-3	4040	518,2	44,45	101,60	212,73	38,10	101,60	73,03	81,7	**PHP 8-C200TB**
		609,6	24,0	A-3	4040	619,8	44,45	101,60	212,73	38,10	101,60	73,03	93,0	**PHP 8-C240TB**
		762,0	30,0	A-3	4040	772,2	44,45	101,60	212,73	38,10	101,60	73,03	119,3	**PHP 8-C300TB**
		914,4	36,0	A-3	4545	924,6	57,15	114,30	212,73	31,75	114,30	66,68	155,6	**PHP 8-C360TB**
		1117,6	44,0	A-3	4545	1127,8	57,15	114,30	212,73	31,75	114,30	66,68	196,0	**PHP 8-C440TB**
C	10	228,6	9,0	A-1	4545	238,8	57,15	114,30	263,53	38,10	114,30	111,13	25,9	**PHP 10-C90TB**
		241,3	9,5	A-1	4545	251,5	57,15	114,30	263,53	38,10	114,30	111,13	29,9	**PHP 10-C95TB**
		254,0	10,0	A-1	4545	264,2	57,15	114,30	263,53	38,10	114,30	111,13	34,9	**PHP 10-C100TB**
		266,7	10,5	A-1	4545	276,9	57,15	114,30	263,53	38,10	114,30	111,13	39,5	**PHP 10-C105TB**
		279,4	11,0	A-1	4545	289,6	57,15	114,30	263,53	38,10	114,30	111,13	44,5	**PHP 10-C110TB**
		304,8	12,0	A-1	4545	315,0	57,15	114,30	263,53	38,10	114,30	111,13	54,9	**PHP 10-C120TB**
		330,2	13,0	A-1	4545	340,4	57,15	114,30	263,53	50,80	114,30	98,43	66,2	**PHP 10-C130TB**
		355,6	14,0	A-2	4545	365,8	57,15	114,30	263,53	50,80	114,30	98,43	78,5	**PHP 10-C140TB**
		406,4	16,0	A-2	4545	416,6	57,15	114,30	263,53	50,80	114,30	98,43	105,7	**PHP 10-C160TB**
		457,2	18,0	A-2	4545	467,4	57,15	114,30	263,53	50,80	114,30	98,43	79,8	**PHP 10-C180TB**
		508,0	20,0	A-3	4545	518,2	57,15	114,30	263,53	50,80	114,30	98,43	91,2	**PHP 10-C200TB**
		609,6	24,0	A-3	4545	619,8	57,15	114,30	263,53	50,80	114,30	98,43	110,2	**PHP 10-C240TB**
		762,0	30,0	A-3	4545	772,2	57,15	114,30	263,53	50,80	114,30	98,43	145,2	**PHP 10-C300TB**
		914,4	36,0	A-3	4545	924,6	57,15	114,30	263,53	50,80	114,30	98,43	210,5	**PHP 10-C360TB**
		1117,6	44,0	A-3	4545	1127,8	57,15	114,30	263,53	50,80	114,30	98,43	230,4	**PHP 10-C440TB**
C	12	228,6	9,0	A-1	4040	238,8	44,45	101,60	314,33	88,90	101,60	123,83	29,5	**PHP 12-C90TB**
		241,3	9,5	A-1	4040	251,5	44,45	101,60	314,33	88,90	101,60	123,83	34,0	**PHP 12-C95TB**
		254,0	10,0	A-1	4040	264,2	44,45	101,60	314,33	88,90	101,60	123,83	38,6	**PHP 12-C100TB**

[1] Taper bushing needs to conform to coarse thread series (UNC) of the ASME/ANSI standard. To complete designation, add U before bushing number and bore size at the end of designation, e.g. PHF TBU3535X70MM.
[2] Mass does not include bushings.

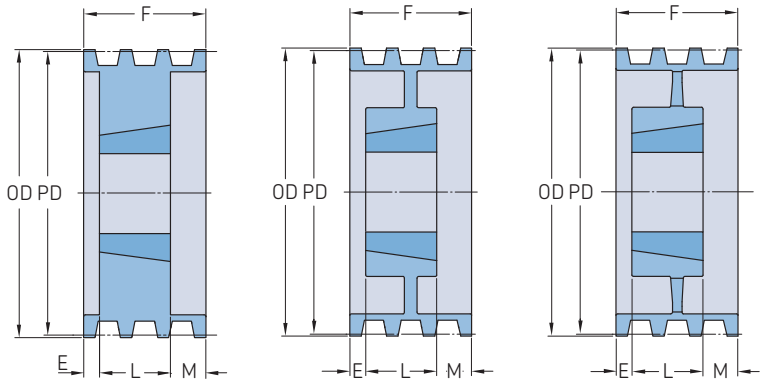

Type A-1 Type A-2 Type A-3

Section	Number of grooves	Pitch diameter PD		Pulley type	Bushing number	Dimensions Outer diameter OD	B Min.	B Max.	F	E	L	M	Mass[2]	Designation
–	–	mm	in.	–	–	mm							kg	–
C	12	266,7	10,5	A-1	4040	276,9	44,45	101,60	314,33	88,90	101,60	123,83	43,1	**PHP 12-C105TB**
		279,4	11,0	A-1	4040	289,6	44,45	101,60	314,33	88,90	101,60	123,83	47,2	**PHP 12-C110TB**
		304,8	12,0	A-1	4040	315,0	44,45	101,60	314,33	88,90	101,60	123,83	57,2	**PHP 12-C120TB**
		330,2	13,0	A-1	4545	340,4	57,15	114,30	314,33	76,20	114,30	123,83	70,8	**PHP 12-C130TB**
		355,6	14,0	A-1	4545	365,8	57,15	114,30	314,33	76,20	114,30	123,83	83,5	**PHP 12-C140TB**
D	4	304,8	12,0	A-2	3535[1]	320,0	50,80	88,90	153,99	19,05	88,90	46,04	28,6	**PHP 4-D120TB**
		330,2	13,0	A-2	3535[1]	345,4	50,80	88,90	153,99	19,05	88,90	46,04	33,1	**PHP 4-D130TB**
		342,9	13,5	A-2	3535[1]	358,1	50,80	88,90	153,99	19,05	88,90	46,04	35,4	**PHP 4-D135TB**
		355,6	14,0	A-2	3535[1]	370,8	50,80	88,90	153,99	19,05	88,90	46,04	37,7	**PHP 4-D140TB**
		368,3	14,5	A-2	3535[1]	383,5	50,80	88,90	153,99	19,05	88,90	46,04	42,6	**PHP 4-D145TB**
		381,0	15,0	A-2	3535[1]	396,2	50,80	88,90	153,99	19,05	88,90	46,04	42,6	**PHP 4-D150TB**
		393,7	15,5	A-2	3535[1]	408,9	50,80	88,90	153,99	19,05	88,90	46,04	44,9	**PHP 4-D155TB**
		406,4	16,0	A-2	3535[1]	421,6	50,80	88,90	153,99	19,05	88,90	46,04	47,2	**PHP 4-D160TB**
		457,2	18,0	A-3	3535[1]	472,4	50,80	88,90	153,99	19,05	88,90	46,04	49,4	**PHP 4-D180TB**
		558,8	22,0	A-3	4040	574,0	44,45	101,60	153,99	19,05	101,60	33,34	64,4	**PHP 4-D220TB**
		685,8	27,0	A-3	4040	701,0	44,45	101,60	153,99	19,05	101,60	33,34	82,6	**PHP 4-D270TB**
D	5	304,8	12,0	A-1	4040	320,0	44,45	101,60	190,50	6,35	101,60	69,85	37,2	**PHP 5-D120TB**
		330,2	13,0	A-2	4040	345,4	44,45	101,60	190,50	19,05	101,60	69,85	39,5	**PHP 5-D130TB**
		342,9	13,5	A-2	4040	358,1	44,45	101,60	190,50	19,05	101,60	69,85	41,7	**PHP 5-D135TB**
		355,6	14,0	A-2	4040	370,8	44,45	101,60	190,50	19,05	101,60	69,85	44,0	**PHP 5-D140TB**
		368,3	14,5	A-2	4040	383,5	44,45	101,60	190,50	19,05	101,60	69,85	46,3	**PHP 5-D145TB**
		381,0	15,0	A-2	4040	396,2	44,45	101,60	190,50	19,05	101,60	69,85	48,5	**PHP 5-D150TB**
		393,7	15,5	A-2	4040	408,9	44,45	101,60	190,50	19,05	101,60	69,85	50,8	**PHP 5-D155TB**
		406,4	16,0	A-2	4040	421,6	44,45	101,60	190,50	19,05	101,60	69,85	50,8	**PHP 5-D160TB**
		457,2	18,0	A-3	4040	472,4	44,45	101,60	190,50	25,40	101,60	63,50	59,9	**PHP 5-D180TB**
		558,8	22,0	A-3	4040	574,0	44,45	101,60	190,50	25,40	101,60	63,50	73,5	**PHP 5-D220TB**
		685,8	27,0	A-3	4040	701,0	44,45	101,60	190,50	25,40	101,60	63,50	93,9	**PHP 5-D270TB**
D	6	304,8	12,0	A-1	4040	320,0	44,45	101,60	227,01	25,40	101,60	100,01	45,4	**PHP 6-D120TB**
		330,2	13,0	A-2	4040	345,4	44,45	101,60	227,01	38,10	101,60	87,31	45,4	**PHP 6-D130TB**
		342,9	13,5	A-2	4040	358,1	44,45	101,60	227,01	38,10	101,60	87,31	48,5	**PHP 6-D135TB**
		355,6	14,0	A-2	4040	370,8	44,45	101,60	227,01	38,10	101,60	87,31	50,8	**PHP 6-D140TB**
		368,3	14,5	A-2	4040	383,5	44,45	101,60	227,01	38,10	101,60	87,31	53,1	**PHP 6-D145TB**
		381,0	15,0	A-2	4040	396,2	44,45	101,60	227,01	38,10	101,60	87,31	55,3	**PHP 6-D150TB**
		393,7	15,5	A-2	4040	408,9	44,45	101,60	227,01	38,10	101,60	87,31	57,6	**PHP 6-D155TB**
		406,4	16,0	A-2	4040	421,6	44,45	101,60	227,01	38,10	101,60	87,31	79,4	**PHP 6-D160TB**
		457,2	18,0	A-2	4040	472,4	44,45	101,60	227,01	38,10	101,60	87,31	83,9	**PHP 6-D180TB**
		558,8	22,0	A-3	4040	574,0	44,45	101,60	227,01	38,10	101,60	87,31	95,3	**PHP 6-D220TB**
		685,8	27,0	A-3	4545	701,0	57,15	114,30	227,01	44,45	114,30	68,26	117,9	**PHP 6-D270TB**
		838,2	33,0	A-3	4545	853,4	57,15	114,30	227,01	44,45	114,30	68,26	154,2	**PHP 6-D330TB**
D	8	304,8	12,0	A-1	4545	320,0	57,15	114,30	300,04	12,70	114,30	173,04	56,7	**PHP 8-D120TB**
		330,2	13,0	A-1	4545	345,4	57,15	114,30	300,04	12,70	114,30	173,04	70,3	**PHP 8-D130TB**
		342,9	13,5	A-2	4545	358,1	57,15	114,30	300,04	25,40	114,30	160,34	68,0	**PHP 8-D135TB**
		355,6	14,0	A-1	4545	370,8	57,15	114,30	300,04	25,40	114,30	160,34	70,3	**PHP 8-D140TB**
		368,3	14,5	A-2	4545	383,5	57,15	114,30	300,04	50,80	114,30	134,94	70,3	**PHP 8-D145TB**
		381,0	15,0	A-2	4545	396,2	57,15	114,30	300,04	50,80	114,30	134,94	61,2	**PHP 8-D150TB**
		393,7	15,5	A-2	4545	408,9	57,15	114,30	300,04	50,80	114,30	134,94	74,8	**PHP 8-D155TB**
		406,4	16,0	A-2	4545	421,6	57,15	114,30	300,04	50,80	114,30	134,94	74,8	**PHP 8-D160TB**
		457,2	18,0	A-2	4545	472,4	57,15	114,30	300,04	69,85	114,30	115,89	81,7	**PHP 8-D180TB**
		558,8	22,0	A-3	4545	574,0	57,15	114,30	300,04	69,85	114,30	115,89	124,7	**PHP 8-D220TB**
		685,8	27,0	A-3	4545	701,0	57,15	114,30	300,04	69,85	114,30	115,89	156,5	**PHP 8-D270TB**
		838,2	33,0	A-3	4545	853,4	57,15	114,30	300,04	69,85	114,30	115,89	206,4	**PHP 8-D330TB**

[1] Taper bushing needs to conform to coarse thread series (UNC) of the ASME/ANSI standard. To complete designation, add U before bushing number and bore size at the end of designation, e.g. PHF TBU3535X70MM.
[2] Mass does not include bushings.

Section	Number of grooves	Pitch diameter		Pulley type	Bushing number	Dimensions Outer diameter							Mass*	Designation
		PD				OD	B Min.	Max.	F	E	L	M		
–	–	mm	in.	–	–	mm							kg	–
D	**10**	304,8	12,0	A-1	4545	320,0	57,15	114,30	373,06	60,33	114,30	198,44	63,5	**PHP 10-D120TB**
		330,2	13,0	A-1	4545	345,4	57,15	114,30	373,06	60,33	114,30	198,44	77,1	**PHP 10-D130TB**
		342,9	13,5	A-2	4545	358,1	57,15	114,30	373,06	60,33	114,30	198,44	77,1	**PHP 10-D135TB**
		355,6	14,0	A-2	4545	370,8	57,15	114,30	373,06	60,33	114,30	198,44	79,4	**PHP 10-D140TB**
		368,3	14,5	A-2	4545	383,5	57,15	114,30	373,06	60,33	114,30	198,44	81,7	**PHP 10-D145TB**
		381,0	15,0	A-2	4545	396,2	57,15	114,30	373,06	60,33	114,30	198,44	88,5	**PHP 10-D150TB**
		393,7	15,5	A-2	4545	408,9	57,15	114,30	373,06	60,33	114,30	198,44	79,4	**PHP 10-D155TB**
		406,4	16,0	A-2	4545	421,6	57,15	114,30	373,06	60,33	114,30	198,44	88,5	**PHP 10-D160TB**
		457,2	18,0	A-2	4545	472,4	57,15	114,30	373,06	101,60	114,30	157,16	88,5	**PHP 10-D180TB**
		558,8	22,0	A-3	4545	574,0	57,15	114,30	373,06	101,60	114,30	157,16	154,2	**PHP 10-D220TB**
		685,8	27,0	A-3	4545	701,0	57,15	114,30	373,06	101,60	114,30	157,16	188,2	**PHP 10-D270TB**
		838,2	33,0	A-3	4545	853,4	57,15	114,30	373,06	107,95	114,30	150,81	220,0	**PHP 10-D330TB**

* Mass does not include bushings.

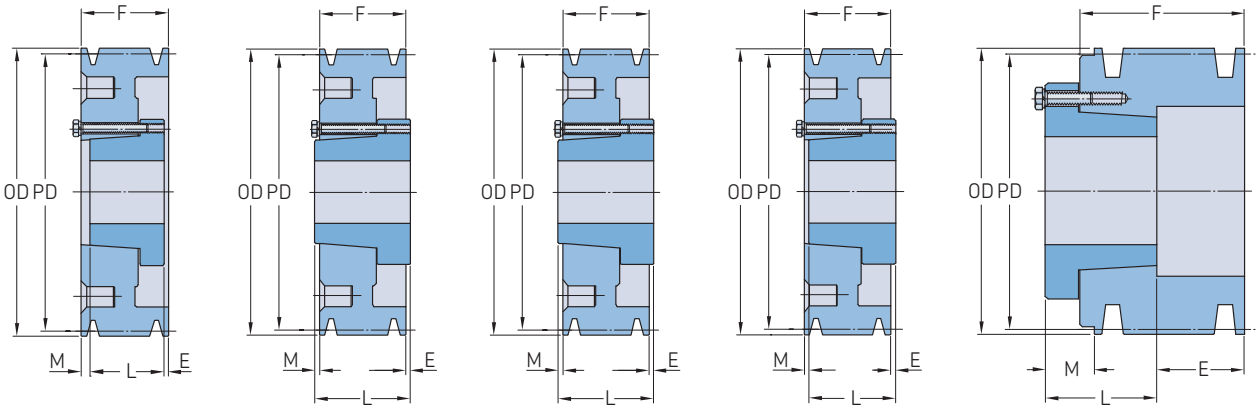

Type A Type B Type C Type D Type E

Section	Number of grooves	Pitch diameter Belt A PD		Belt B PD		Pulley type[1]	Bushing number	Dimensions Outer diameter OD	Bore Min.	Max.	E	F	L	M	Mass[2]	Designation
–	–	mm	in.	mm	in.	–	–	mm							kg	–
A/B	**1**	76,2	3,0	86,4	3,4	E-1	SH	95,25	12,70	41,28	5,56	22,23	33,34	16,67	0,9	**PHP 1-B34-SH**
		81,3	3,2	91,4	3,6	D-1	SH	100,33	12,70	41,28	15,08	22,23	33,34	3,97	1,0	**PHP 1-B36-SH**
		86,4	3,4	96,5	3,8	D-1	SH	105,41	12,70	41,28	15,08	22,23	33,34	3,97	1,1	**PHP 1-B38-SH**
		91,4	3,6	101,6	4,0	C-1	SH	110,49	12,70	41,28	8,73	22,23	33,34	2,38	1,2	**PHP 1-B40-SH**
		96,5	3,8	106,7	4,2	C-1	SH	115,57	12,70	41,28	8,73	22,23	33,34	2,38	1,3	**PHP 1-B42-SH**
		101,6	4,0	111,8	4,4	C-1	SH	120,65	12,70	41,28	8,73	22,23	33,34	2,38	1,5	**PHP 1-B44-SH**
		106,7	4,2	116,8	4,6	C-1	SDS	125,73	12,70	50,80	8,73	22,23	33,34	2,38	1,8	**PHP 1-B46-SDS**
		111,8	4,4	121,9	4,8	C-1	SDS	130,81	12,70	50,80	8,73	22,23	33,34	2,38	2,0	**PHP 1-B48-SDS**
		116,8	4,6	127,0	5,0	C-1	SDS	135,89	12,70	50,80	8,73	22,23	33,34	2,38	2,1	**PHP 1-B50-SDS**
		121,9	4,8	132,1	5,2	C-1	SDS	140,97	12,70	50,80	8,73	22,23	33,34	2,38	2,3	**PHP 1-B52-SDS**
		127,0	5,0	137,2	5,4	C-1	SDS	146,05	12,70	50,80	8,73	22,23	33,34	2,38	2,4	**PHP 1-B54-SDS**
		132,1	5,2	142,2	5,6	C-1	SDS	151,13	12,70	50,80	8,73	22,23	33,34	2,38	2,5	**PHP 1-B56-SDS**
		137,2	5,4	147,3	5,8	C-2	SDS	156,21	12,70	50,80	8,73	22,23	33,34	2,38	2,7	**PHP 1-B58-SDS**
		142,2	5,6	152,4	6,0	C-2	SDS	161,29	12,70	50,80	8,73	22,23	33,34	2,38	2,8	**PHP 1-B60-SDS**
		147,3	5,8	157,5	6,2	C-2	SDS	166,37	12,70	50,80	8,73	22,23	33,34	2,38	3,0	**PHP 1-B62-SDS**
		152,4	6,0	162,6	6,4	C-2	SDS	171,45	12,70	50,80	8,73	22,23	33,34	2,38	3,1	**PHP 1-B64-SDS**
		157,5	6,2	167,6	6,6	C-2	SDS	176,53	12,70	50,80	8,73	22,23	33,34	2,38	3,3	**PHP 1-B66-SDS**
		162,6	6,4	172,7	6,8	C-3	SDS	181,61	12,70	50,80	8,73	22,23	33,34	2,38	3,4	**PHP 1-B68-SDS**
		167,6	6,6	177,8	7,0	C-3	SDS	186,69	12,70	50,80	8,73	22,23	33,34	2,38	3,5	**PHP 1-B70-SDS**
		177,8	7,0	188,0	7,4	D-3	SDS	196,85	12,70	50,80	13,49	25,40	33,34	5,56	4,0	**PHP 1-B74-SDS**
		193,0	7,6	203,2	8,0	D-3	SDS	212,09	12,70	50,80	13,49	25,40	33,34	5,56	4,4	**PHP 1-B80-SDS**
		208,3	8,2	218,4	8,6	D-3	SDS	227,33	12,70	50,80	13,49	25,40	33,34	5,56	4,5	**PHP 1-B86-SDS**
		228,6	9,0	238,8	9,4	D-3	SDS	247,65	12,70	50,80	13,49	25,40	33,34	5,56	4,8	**PHP 1-B94-SDS**
		269,2	10,6	279,4	11,0	D-3	SDS	288,29	12,70	50,80	13,49	25,40	33,34	5,56	5,0	**PHP 1-B110-SDS**
		304,8	12,0	315,0	12,4	D-3	SDS	323,85	12,70	50,80	13,49	25,40	33,34	5,56	5,4	**PHP 1-B124-SDS**
		335,3	13,2	345,4	13,6	D-3	SDS	354,33	12,70	50,80	13,49	25,40	33,34	5,56	6,4	**PHP 1-B136-SDS**
		381,0	15,0	391,2	15,4	C-3	SK	400,05	12,70	66,68	16,67	25,40	49,21	7,14	7,3	**PHP 1-B154-SK**
		396,2	15,6	406,4	16,0	C-3	SK	415,29	12,70	66,68	16,67	25,40	49,21	7,14	7,5	**PHP 1-B160-SK**
		457,2	18,0	467,4	18,4	C-3	SK	476,25	12,70	66,68	16,67	25,40	49,21	7,14	8,2	**PHP 1-B184-SK**
		497,8	19,6	508,0	20,0	C-3	SK	516,89	12,70	66,68	16,67	25,40	49,21	7,14	9,1	**PHP 1-B200-SK**
A/B	**2**	76,2	3,0	86,4	3,4	E-1	SH	95,25	12,70	41,28	27,78	44,45	33,34	16,67	1,5	**PHP 2-B34-SH**
		81,3	3,2	91,4	3,6	D-1	SH	100,33	12,70	41,28	11,91	44,45	33,34	23,02	1,5	**PHP 2-B36-SH**
		86,4	3,4	96,5	3,8	D-1	SH	105,41	12,70	41,28	11,91	44,45	33,34	23,02	1,8	**PHP 2-B38-SH**
		91,4	3,6	101,6	4,0	A-1	SH	110,49	12,70	41,28	0,79	44,45	33,34	10,32	1,9	**PHP 2-B40-SH**
		96,5	3,8	106,7	4,2	A-1	SH	115,57	12,70	41,28	0,79	44,45	33,34	10,32	2,0	**PHP 2-B42-SH**
		101,6	4,0	111,8	4,4	A-1	SH	120,65	12,70	41,28	0,79	44,45	33,34	10,32	2,1	**PHP 2-B44-SH**
		106,7	4,2	116,8	4,6	A-1	SDS	125,73	12,70	50,80	0,79	44,45	33,34	10,32	2,3	**PHP 2-B46-SDS**
		111,8	4,4	121,9	4,8	A-1	SDS	130,81	12,70	50,80	0,79	44,45	33,34	10,32	2,5	**PHP 2-B48-SDS**
		116,8	4,6	127,0	5,0	A-1	SDS	135,89	12,70	50,80	0,79	44,45	33,34	10,32	2,7	**PHP 2-B50-SDS**
		121,9	4,8	132,1	5,2	A-1	SDS	140,97	12,70	50,80	0,79	44,45	33,34	10,32	2,9	**PHP 2-B52-SDS**
		127,0	5,0	137,2	5,4	A-1	SDS	146,05	12,70	50,80	0,79	44,45	33,34	10,32	3,0	**PHP 2-B54-SDS**
		132,1	5,2	142,2	5,6	A-2	SDS	151,13	12,70	50,80	0,79	44,45	33,34	10,32	3,1	**PHP 2-B56-SDS**
		137,2	5,4	147,3	5,8	A-2	SDS	156,21	12,70	50,80	0,79	44,45	33,34	10,32	3,3	**PHP 2-B58-SDS**
		142,2	5,6	152,4	6,0	A-2	SDS	161,29	12,70	50,80	0,79	44,45	33,34	10,32	3,4	**PHP 2-B60-SDS**
		147,3	5,8	157,5	6,2	A-2	SDS	166,37	12,70	50,80	0,79	44,45	33,34	10,32	3,5	**PHP 2-B62-SDS**
		152,4	6,0	162,6	6,4	A-2	SDS	171,45	12,70	50,80	0,79	44,45	33,34	10,32	3,7	**PHP 2-B64-SDS**
		157,5	6,2	167,6	6,6	A-2	SDS	176,53	12,70	50,80	0,79	44,45	33,34	10,32	3,9	**PHP 2-B66-SDS**
		162,6	6,4	172,7	6,8	A-3	SDS	181,61	12,70	50,80	0,79	44,45	33,34	10,32	4,1	**PHP 2-B68-SDS**
		167,6	6,6	177,8	7,0	D-1	SK	186,69	12,70	66,68	8,73	44,45	49,21	3,97	4,2	**PHP 2-B70-SK**
		177,8	7,0	188,0	7,4	D-3	SK	196,85	12,70	66,68	8,73	44,45	49,21	3,97	4,8	**PHP 2-B74-SK**
		193,0	7,6	203,2	8,0	D-3	SK	212,09	12,70	66,68	8,73	44,45	49,21	3,97	5,0	**PHP 2-B80-SK**
		208,3	8,2	218,4	8,6	D-3	SK	227,33	12,70	66,68	8,73	44,45	49,21	3,97	5,3	**PHP 2-B86-SK**
		228,6	9,0	238,8	9,4	D-3	SK	247,65	12,70	66,68	8,73	44,45	49,21	3,97	5,9	**PHP 2-B94-SK**
		269,2	10,6	279,4	11,0	D-3	SK	288,29	12,70	66,68	8,73	44,45	49,21	3,97	6,4	**PHP 2-B110-SK**

[1] Please, note that 1 in pulley type stands for solid version, 2 for web version and 3 for arm/spoke version.
[2] Mass does not include bushings.

Section	Number of grooves	Pitch diameter Belt A PD		Belt B PD		Pulley type[1]	Bushing number	Dimensions Outer diameter OD	Bore Min.	Max.	E	F	L	M	Mass[2]	Designation
–	–	mm	in.	mm	in.	–	–	mm							kg	–
A/B	**2**	304,8	12,0	315,0	12,4	D-3	SK	323,85	12,70	66,68	8,73	44,45	49,21	3,97	8,2	**PHP 2-B124-SK**
		335,3	13,2	345,4	13,6	D-3	SK	354,33	12,70	66,68	8,73	44,45	49,21	3,97	9,1	**PHP 2-B136-SK**
		381,0	15,0	391,2	15,4	D-3	SK	400,05	12,70	66,68	8,73	44,45	49,21	3,97	10,4	**PHP 2-B154-SK**
		396,2	15,6	406,4	16,0	D-3	SK	415,29	12,70	66,68	8,73	44,45	49,21	3,97	10,9	**PHP 2-B160-SK**
		457,2	18,0	467,4	18,4	D-3	SK	476,25	12,70	66,68	8,73	44,45	49,21	3,97	13,2	**PHP 2-B184-SK**
		497,8	19,6	508,0	20,0	D-3	SF	516,89	12,70	74,61	11,91	44,45	52,39	3,97	15,0	**PHP 2-B200-SF**
		624,8	24,6	635,0	25,0	D-3	SF	643,89	12,70	74,61	11,91	44,45	52,39	3,97	18,6	**PHP 2-B250-SF**
		751,8	29,6	762,0	30,0	D-3	SF	770,89	12,70	74,61	11,91	44,45	52,39	3,97	23,1	**PHP 2-B300-SF**
		955,0	37,6	965,2	38,0	D-3	SF	974,09	12,70	74,61	11,91	44,45	52,39	3,97	29,0	**PHP 2-B380-SF**
A/B	**3**	76,2	3,0	86,4	3,4	E-1	SH	95,25	12,70	41,28	30,96	63,50	33,34	16,67	2,0	**PHP 3-B34-SH**
		81,3	3,2	91,4	3,6	D-1	SH	100,33	12,70	41,28	11,91	63,50	33,34	42,07	2,1	**PHP 3-B36-SH**
		86,4	3,4	96,5	3,8	D-1	SH	105,41	12,70	41,28	11,91	63,50	33,34	42,07	2,4	**PHP 3-B38-SH**
		91,4	3,6	101,6	4,0	D-1	SH	110,49	12,70	41,28	11,91	63,50	33,34	42,07	2,5	**PHP 3-B40-SH**
		96,5	3,8	106,7	4,2	D-1	SH	115,57	12,70	41,28	11,91	63,50	33,34	42,07	2,7	**PHP 3-B42-SH**
		101,6	4,0	111,8	4,4	D-1	SH	120,65	12,70	41,28	11,91	63,50	33,34	42,07	2,9	**PHP 3-B44-SH**
		106,7	4,2	116,8	4,6	A-1	SD	125,73	12,70	50,80	10,32	63,50	46,04	7,14	3,0	**PHP 3-B46-SD**
		111,8	4,4	121,9	4,8	A-1	SD	130,81	12,70	50,80	10,32	63,50	46,04	7,14	3,2	**PHP 3-B48-SD**
		116,8	4,6	127,0	5,0	A-1	SD	135,89	12,70	50,80	10,32	63,50	46,04	7,14	3,4	**PHP 3-B50-SD**
		121,9	4,8	132,1	5,2	A-1	SD	140,97	12,70	50,80	10,32	63,50	46,04	7,14	3,5	**PHP 3-B52-SD**
		127,0	5,0	137,2	5,4	A-1	SD	146,05	12,70	50,80	10,32	63,50	46,04	7,14	3,7	**PHP 3-B54-SD**
		132,1	5,2	142,2	5,6	A-1	SD	151,13	12,70	50,80	10,32	63,50	46,04	7,14	3,9	**PHP 3-B56-SD**
		137,2	5,4	147,3	5,8	A-1	SD	156,21	12,70	50,80	10,32	63,50	46,04	7,14	4,0	**PHP 3-B58-SD**
		142,2	5,6	152,4	6,0	A-1	SD	161,29	12,70	50,80	10,32	63,50	46,04	7,14	4,1	**PHP 3-B60-SD**
		147,3	5,8	157,5	6,2	A-1	SD	166,37	12,70	50,80	10,32	63,50	46,04	7,14	4,3	**PHP 3-B62-SD**
		152,4	6,0	162,6	6,4	A-1	SD	171,45	12,70	50,80	10,32	63,50	46,04	7,14	4,4	**PHP 3-B64-SD**
		157,5	6,2	167,6	6,6	A-1	SD	176,53	12,70	50,80	10,32	63,50	46,04	7,14	4,5	**PHP 3-B66-SD**
		162,6	6,4	172,7	6,8	B-3	SD	181,61	12,70	50,80	10,32	63,50	46,04	7,14	4,8	**PHP 3-B68-SD**
		167,6	6,6	177,8	7,0	D-1	SK	186,69	12,70	66,68	2,38	63,50	49,21	16,67	5,0	**PHP 3-B70-SK**
		177,8	7,0	188,0	7,4	D-3	SK	196,85	12,70	66,68	2,38	63,50	49,21	16,67	5,4	**PHP 3-B74-SK**
		193,0	7,6	203,2	8,0	D-3	SK	212,09	12,70	66,68	2,38	63,50	49,21	16,67	5,7	**PHP 3-B80-SK**
		208,3	8,2	218,4	8,6	D-3	SK	227,33	12,70	66,68	2,38	63,50	49,21	16,67	5,9	**PHP 3-B86-SK**
		228,6	9,0	238,8	9,4	D-3	SK	247,65	12,70	66,68	2,38	63,50	49,21	16,67	7,3	**PHP 3-B94-SK**
		269,2	10,6	279,4	11,0	D-3	SK	288,29	12,70	66,68	2,38	63,50	49,21	16,67	8,6	**PHP 3-B110-SK**
		304,8	12,0	315,0	12,4	D-3	SK	323,85	12,70	66,68	2,38	63,50	49,21	16,67	10,9	**PHP 3-B124-SK**
		335,3	13,2	345,4	13,6	D-3	SK	354,33	12,70	66,68	2,38	63,50	49,21	16,67	12,3	**PHP 3-B136-SK**
		381,0	15,0	391,2	15,4	D-3	SK	400,05	12,70	66,68	2,38	63,50	49,21	16,67	13,6	**PHP 3-B154-SK**
		396,2	15,6	406,4	16,0	D-3	SK	415,29	12,70	66,68	2,38	63,50	49,21	16,67	15,0	**PHP 3-B160-SK**
		457,2	18,0	467,4	18,4	D-3	SK	476,25	12,70	66,68	2,38	63,50	49,21	16,67	17,2	**PHP 3-B184-SK**
		497,8	19,6	508,0	20,0	D-3	SF	516,89	12,70	74,61	5,56	63,50	52,39	16,67	19,5	**PHP 3-B200-SF**
		624,8	24,6	635,0	25,0	D-3	SF	643,89	12,70	74,61	5,56	63,50	52,39	16,67	24,5	**PHP 3-B250-SF**
		751,8	29,6	762,0	30,0	D-3	SF	770,89	12,70	74,61	5,56	63,50	52,39	16,67	30,4	**PHP 3-B300-SF**
		955,0	37,6	965,2	38,0	D-3	E	974,09	22,23	88,90	13,49	63,50	69,85	7,14	40,8	**PHP 3-B380-E**
A/B	**4**	76,2	3,0	86,4	3,4	E-1	SD	95,25	12,70	50,80	62,71	82,55	46,04	26,19	2,5	**PHP 4-B34-SD**
		81,3	3,2	91,4	3,6	E-1	SD	100,33	12,70	50,80	62,71	82,55	46,04	26,19	2,6	**PHP 4-B36-SD**
		86,4	3,4	96,5	3,8	E-1	SD	105,41	12,70	50,80	62,71	82,55	46,04	26,19	2,8	**PHP 4-B38-SD**
		91,4	3,6	101,6	4,0	E-1	SD	110,49	12,70	50,80	52,39	82,55	46,04	16,67	3,0	**PHP 4-B40-SD**
		96,5	3,8	106,7	4,2	E-1	SD	115,57	12,70	50,80	52,39	82,55	46,04	16,67	3,1	**PHP 4-B42-SD**
		101,6	4,0	111,8	4,4	E-1	SD	120,65	12,70	50,80	52,39	82,55	46,04	16,67	3,3	**PHP 4-B44-SD**
		106,7	4,2	116,8	4,6	A-1	SD	125,73	12,70	50,80	16,67	82,55	46,04	19,84	3,5	**PHP 4-B46-SD**
		111,8	4,4	121,9	4,8	A-1	SD	130,81	12,70	50,80	16,67	82,55	46,04	19,84	3,6	**PHP 4-B48-SD**
		116,8	4,6	127,0	5,0	A-1	SD	135,89	12,70	50,80	16,67	82,55	46,04	19,84	3,8	**PHP 4-B50-SD**
		121,9	4,8	132,1	5,2	A-1	SD	140,97	12,70	50,80	16,67	82,55	46,04	19,84	3,9	**PHP 4-B52-SD**
		127,0	5,0	137,2	5,4	A-1	SD	146,05	12,70	50,80	16,67	82,55	46,04	19,84	4,2	**PHP 4-B54-SD**
		132,1	5,2	142,2	5,6	A-1	SD	151,13	12,70	50,80	16,67	82,55	46,04	19,84	4,4	**PHP 4-B56-SD**
		137,2	5,4	147,3	5,8	A-1	SD	156,21	12,70	50,80	16,67	82,55	46,04	19,84	4,5	**PHP 4-B58-SD**
		142,2	5,6	152,4	6,0	A-1	SD	161,29	12,70	50,80	16,67	82,55	46,04	19,84	4,7	**PHP 4-B60-SD**
		147,3	5,8	157,5	6,2	A-1	SD	166,37	12,70	50,80	16,67	82,55	46,04	19,84	4,9	**PHP 4-B62-SD**
		152,4	6,0	162,6	6,4	A-1	SD	171,45	12,70	50,80	16,67	82,55	46,04	19,84	5,4	**PHP 4-B64-SD**
		157,5	6,2	167,6	6,6	A-1	SD	176,53	12,70	50,80	16,67	82,55	46,04	19,84	5,6	**PHP 4-B66-SD**
		162,6	6,4	172,7	6,8	A-3	SD	181,61	12,70	50,80	16,67	82,55	46,04	19,84	5,9	**PHP 4-B68-SD**
		167,6	6,6	177,8	7,0	A-1	SK	186,69	12,70	66,68	5,56	82,55	49,21	26,99	6,1	**PHP 4-B70-SK**
		177,8	7,0	188,0	7,4	A-3	SK	196,85	12,70	66,68	5,56	82,55	49,21	26,99	6,4	**PHP 4-B74-SK**
		193,0	7,6	203,2	8,0	A-3	SK	212,09	12,70	66,68	5,56	82,55	49,21	26,99	7,0	**PHP 4-B80-SK**
		208,3	8,2	218,4	8,6	A-3	SK	227,33	12,70	66,68	5,56	82,55	49,21	26,99	7,7	**PHP 4-B86-SK**
		228,6	9,0	238,8	9,4	A-3	SK	247,65	12,70	66,68	5,56	82,55	49,21	26,99	8,6	**PHP 4-B94-SK**
		269,2	10,6	279,4	11,0	A-3	SK	288,29	12,70	66,68	5,56	82,55	49,21	26,99	10,0	**PHP 4-B110-SK**
		304,8	12,0	315,0	12,4	A-3	SK	323,85	12,70	66,68	5,56	82,55	49,21	26,99	13,2	**PHP 4-B124-SK**
		335,3	13,2	345,4	13,6	A-3	SK	354,33	12,70	66,68	5,56	82,55	49,21	26,99	15,4	**PHP 4-B136-SK**
		381,0	15,0	391,2	15,4	A-3	SF	400,05	12,70	74,61	3,97	82,55	52,39	26,19	17,7	**PHP 4-B154-SF**
		396,2	15,6	406,4	16,0	A-3	SF	415,29	12,70	74,61	3,97	82,55	52,39	26,19	19,1	**PHP 4-B160-SF**
		457,2	18,0	467,4	18,4	A-3	SF	476,25	12,70	74,61	3,97	82,55	52,39	26,19	21,3	**PHP 4-B184-SF**
		497,8	19,6	508,0	20,0	A-3	SF	516,89	12,70	74,61	3,97	82,55	52,39	26,19	23,1	**PHP 4-B200-SF**
		624,8	24,6	635,0	25,0	D-3	E	643,89	22,23	88,90	3,97	82,55	69,85	16,67	33,1	**PHP 4-B250-E**

[1] Please, note that 1 in pulley type stands for solid version, 2 for web version and 3 for arm/spoke version.
[2] Mass does not include bushings.

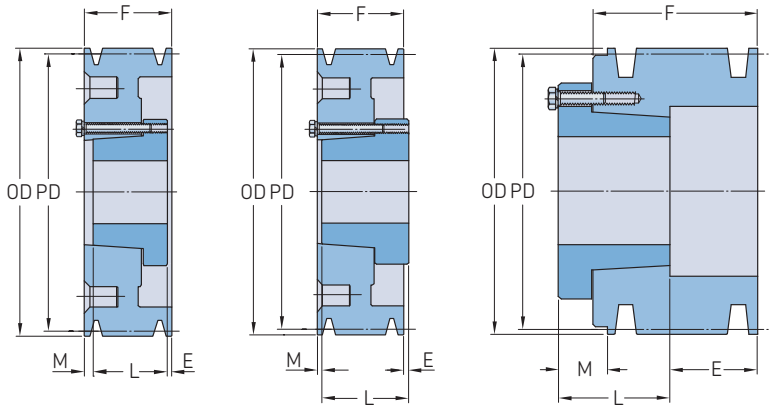

Section	Number of grooves	Pitch diameter Belt A PD		Belt B PD		Pulley type[1]	Bushing number	Dimensions Outer diameter OD	Bore Min.	Max.	E	F	L	M	Mass[2]	Designation
–	–	mm	in.	mm	in.	–	–	mm							kg	–
A/B	**4**	751,8	29,6	762,0	30,0	D-3	E	770,89	22,23	88,90	3,97	82,55	69,85	16,67	39,0	**PHP 4-B300-E**
		955,0	37,6	965,2	38,0	D-3	E	974,09	22,23	88,90	3,97	82,55	69,85	16,67	49,4	**PHP 4-B380-E**
A/B	**5**	76,2	3,0	86,4	3,4	E-1	SD	95,25	12,70	50,80	81,76	101,60	46,04	26,19	2,8	**PHP 5-B34-SD**
		81,3	3,2	91,4	3,6	E-1	SD	100,33	12,70	50,80	81,76	101,60	46,04	26,19	3,0	**PHP 5-B36-SD**
		86,4	3,4	96,5	3,8	E-1	SD	105,41	12,70	50,80	81,76	101,60	46,04	26,19	3,2	**PHP 5-B38-SD**
		91,4	3,6	101,6	4,0	E-1	SD	110,49	12,70	50,80	72,23	101,60	46,04	16,67	3,4	**PHP 5-B40-SD**
		96,5	3,8	106,7	4,2	E-1	SD	115,57	12,70	50,80	72,23	101,60	46,04	16,67	3,6	**PHP 5-B42-SD**
		101,6	4,0	111,8	4,4	E-1	SD	120,65	12,70	50,80	72,23	101,60	46,04	16,67	3,9	**PHP 5-B44-SD**
		106,7	4,2	116,8	4,6	A-1	SD	125,73	12,70	50,80	67,47	101,60	46,04	38,89	4,1	**PHP 5-B46-SD**
		111,8	4,4	121,9	4,8	A-1	SD	130,81	12,70	50,80	67,47	101,60	46,04	38,89	4,3	**PHP 5-B48-SD**
		116,8	4,6	127,0	5,0	A-1	SD	135,89	12,70	50,80	67,47	101,60	46,04	38,89	4,5	**PHP 5-B50-SD**
		121,9	4,8	132,1	5,2	A-1	SD	140,97	12,70	50,80	67,47	101,60	46,04	38,89	4,7	**PHP 5-B52-SD**
		127,0	5,0	137,2	5,4	A-1	SK	146,05	12,70	66,68	13,49	101,60	49,21	38,89	4,9	**PHP 5-B54-SK**
		132,1	5,2	142,2	5,6	A-1	SK	151,13	12,70	66,68	13,49	101,60	49,21	38,89	5,1	**PHP 5-B56-SK**
		137,2	5,4	147,3	5,8	A-1	SK	156,21	12,70	66,68	13,49	101,60	49,21	38,89	5,4	**PHP 5-B58-SK**
		142,2	5,6	152,4	6,0	A-1	SK	161,29	12,70	66,68	13,49	101,60	49,21	38,89	6,4	**PHP 5-B60-SK**
		147,3	5,8	157,5	6,2	A-1	SK	166,37	12,70	66,68	13,49	101,60	49,21	38,89	6,8	**PHP 5-B62-SK**
		152,4	6,0	162,6	6,4	A-1	SK	171,45	12,70	66,68	13,49	101,60	49,21	38,89	7,3	**PHP 5-B64-SK**
		157,5	6,2	167,6	6,6	A-1	SK	176,53	12,70	66,68	13,49	101,60	49,21	38,89	7,7	**PHP 5-B66-SK**
		162,6	6,4	172,7	6,8	A-1	SK	181,61	12,70	66,68	13,49	101,60	49,21	38,89	8,2	**PHP 5-B68-SK**
		167,6	6,6	177,8	7,0	A-1	SF	186,69	12,70	74,61	11,91	101,60	52,39	37,31	8,6	**PHP 5-B70-SF**
		177,8	7,0	188,0	7,4	A-2	SF	196,85	12,70	74,61	11,91	101,60	52,39	37,31	9,1	**PHP 5-B74-SF**
		193,0	7,6	203,2	8,0	A-2	SF	212,09	12,70	74,61	11,91	101,60	52,39	37,31	9,5	**PHP 5-B80-SF**
		208,3	8,2	218,4	8,6	A-2	SF	227,33	12,70	74,61	11,91	101,60	52,39	37,31	10,0	**PHP 5-B86-SF**
		228,6	9,0	238,8	9,4	A-3	SF	247,65	12,70	74,61	11,91	101,60	52,39	37,31	10,9	**PHP 5-B94-SF**
		269,2	10,6	279,4	11,0	A-3	SF	288,29	12,70	74,61	11,91	101,60	52,39	37,31	13,2	**PHP 5-B110-SF**
		304,8	12,0	315,0	12,4	A-3	SF	323,85	12,70	74,61	11,91	101,60	52,39	37,31	15,4	**PHP 5-B124-SF**
		335,3	13,2	345,4	13,6	A-3	SF	354,33	12,70	74,61	11,91	101,60	52,39	37,31	17,2	**PHP 5-B136-SF**
		381,0	15,0	391,2	15,4	A-3	SF	400,05	12,70	74,61	11,91	101,60	52,39	37,31	20,9	**PHP 5-B154-SF**
		396,2	15,6	406,4	16,0	A-3	SF	415,29	12,70	74,61	11,91	101,60	52,39	37,31	22,2	**PHP 5-B160-SF**
		457,2	18,0	467,4	18,4	A-3	SF	476,25	12,70	74,61	11,91	101,60	52,39	37,31	25,0	**PHP 5-B184-SF**
		497,8	19,6	508,0	20,0	A-3	E	516,89	22,23	12,70	1,59	101,60	69,85	29,37	29,5	**PHP 5-B200-E**
		624,8	24,6	635,0	25,0	A-3	E	643,89	22,23	12,70	1,59	101,60	69,85	29,37	39,0	**PHP 5-B250-E**
		751,8	29,6	762,0	30,0	A-3	E	770,89	22,23	12,70	1,59	101,60	69,85	29,37	46,3	**PHP 5-B300-E**
		955,0	37,6	965,2	38,0	A-3	E	974,09	22,23	12,70	1,59	101,60	69,85	29,37	59,9	**PHP 5-B380-E**
A/B	**6**	76,2	3,0	86,4	3,4	E-1	SD	95,25	12,70	50,80	100,81	120,65	46,04	26,19	3,0	**PHP 6-B34-SD**
		81,3	3,2	91,4	3,6	E-1	SD	100,33	12,70	50,80	100,81	120,65	46,04	26,19	3,4	**PHP 6-B36-SD**
		86,4	3,4	96,5	3,8	E-1	SD	105,41	12,70	50,80	100,81	120,65	46,04	26,19	3,6	**PHP 6-B38-SD**
		91,4	3,6	101,6	4,0	E-1	SD	110,49	12,70	50,80	91,28	120,65	46,04	16,67	3,8	**PHP 6-B40-SD**
		96,5	3,8	106,7	4,2	E-1	SD	115,57	12,70	50,80	91,28	120,65	46,04	16,67	4,1	**PHP 6-B42-SD**
		101,6	4,0	111,8	4,4	E-1	SD	120,65	12,70	50,80	91,28	120,65	46,04	16,67	4,4	**PHP 6-B44-SD**
		106,7	4,2	116,8	4,6	A-1	SD	125,73	12,70	50,80	16,67	120,65	46,04	57,94	4,6	**PHP 6-B46-SD**
		111,8	4,4	121,9	4,8	A-1	SD	130,81	12,70	50,80	16,67	120,65	46,04	57,94	4,8	**PHP 6-B48-SD**
		116,8	4,6	127,0	5,0	A-1	SD	135,89	12,70	50,80	16,67	120,65	46,04	57,94	5,0	**PHP 6-B50-SD**
		121,9	4,8	132,1	5,2	A-1	SD	140,97	12,70	50,80	16,67	120,65	46,04	57,94	5,4	**PHP 6-B52-SD**
		127,0	5,0	137,2	5,4	A-1	SK	146,05	12,70	66,68	13,49	120,65	49,21	57,94	5,9	**PHP 6-B54-SK**
		132,1	5,2	142,2	5,6	A-1	SK	151,13	12,70	66,68	13,49	120,65	49,21	57,94	6,4	**PHP 6-B56-SK**
		137,2	5,4	147,3	5,8	A-1	SK	156,21	12,70	66,68	13,49	120,65	49,21	57,94	6,6	**PHP 6-B58-SK**
		142,2	5,6	152,4	6,0	A-1	SK	161,29	12,70	66,68	13,49	120,65	49,21	57,94	6,8	**PHP 6-B60-SK**
		147,3	5,8	157,5	6,2	A-1	SK	166,37	12,70	66,68	13,49	120,65	49,21	57,94	7,3	**PHP 6-B62-SK**
		152,4	6,0	162,6	6,4	A-1	SK	171,45	12,70	66,68	13,49	120,65	49,21	57,94	7,7	**PHP 6-B64-SK**
		157,5	6,2	167,6	6,6	A-1	SK	176,53	12,70	66,68	13,49	120,65	49,21	57,94	8,2	**PHP 6-B66-SK**
		162,6	6,4	172,7	6,8	A-1	SK	181,61	12,70	66,68	13,49	120,65	49,21	57,94	8,6	**PHP 6-B68-SK**

[1] Please, note that 1 in pulley type stands for solid version, 2 for web version and 3 for arm/spoke version.
[2] Mass does not include bushings.

Section	Number of grooves	Pitch diameter Belt A PD		Belt B PD		Pulley type[1]	Bushing number	Dimensions Outer diameter OD	Bore Min.	Max.	E	F	L	M	Mass[2]	Designation
–	–	mm	in.	mm	in.	–	–	mm							kg	–
A/B	**6**	167,6	6,6	177,8	7,0	A-1	SF	186,69	12,70	74,61	21,43	120,65	52,39	46,83	9,1	**PHP 6-B70-SF**
		177,8	7,0	188,0	7,4	A-1	SF	196,85	12,70	74,61	21,43	120,65	52,39	46,83	10,0	**PHP 6-B74-SF**
		193,0	7,6	203,2	8,0	A-2	SF	212,09	12,70	74,61	21,43	120,65	52,39	46,83	10,9	**PHP 6-B80-SF**
		208,3	8,2	218,4	8,6	A-2	SF	227,33	12,70	74,61	21,43	120,65	52,39	46,83	11,8	**PHP 6-B86-SF**
		228,6	9,0	238,8	9,4	A-3	SF	247,65	12,70	74,61	21,43	120,65	52,39	46,83	12,3	**PHP 6-B94-SF**
		269,2	10,6	279,4	11,0	A-3	SF	288,29	12,70	74,61	21,43	120,65	52,39	46,83	14,5	**PHP 6-B110-SF**
		304,8	12,0	315,0	12,4	A-3	SF	323,85	12,70	74,61	21,43	120,65	52,39	46,83	17,7	**PHP 6-B124-SF**
		335,3	13,2	345,4	13,6	A-3	SF	354,33	12,70	74,61	21,43	120,65	52,39	46,83	20,0	**PHP 6-B136-SF**
		381,0	15,0	391,2	15,4	A-3	SF	400,05	12,70	74,61	21,43	120,65	52,39	46,83	22,7	**PHP 6-B154-SF**
		396,2	15,6	406,4	16,0	A-3	SF	415,29	12,70	74,61	21,43	120,65	52,39	46,83	24,5	**PHP 6-B160-SF**
		457,2	18,0	467,4	18,4	A-3	SF	476,25	12,70	74,61	21,43	120,65	52,39	46,83	28,1	**PHP 6-B184-SF**
		497,8	19,6	508,0	20,0	A-3	E	516,89	22,23	88,90	5,56	120,65	69,85	45,24	33,6	**PHP 6-B200-E**
		624,8	24,6	635,0	25,0	A-3	E	643,89	22,23	88,90	5,56	120,65	69,85	45,24	43,5	**PHP 6-B250-E**
		751,8	29,6	762,0	30,0	A-3	E	770,89	22,23	88,90	5,56	120,65	69,85	45,24	54,0	**PHP 6-B300-E**
		955,0	37,6	965,2	38,0	A-3	E	974,09	22,23	88,90	5,56	120,65	69,85	45,24	60,8	**PHP 6-B380-E**
A/B	**8**	127,0	5,0	137,2	5,4	A-1	SK	146,05	12,70	66,68	26,19	158,75	49,21	83,34	6,8	**PHP 8-B54-SK**
		132,1	5,2	142,2	5,6	A-1	SK	151,13	12,70	66,68	26,19	158,75	49,21	83,34	7,3	**PHP 8-B56-SK**
		142,2	5,6	152,4	6,0	A-1	SF	161,29	12,70	74,61	24,61	158,75	52,39	81,76	9,1	**PHP 8-B60-SF**
		152,4	6,0	162,6	6,4	A-1	SF	171,45	12,70	74,61	24,61	158,75	52,39	81,76	10,4	**PHP 8-B64-SF**
		162,6	6,4	172,7	6,8	A-1	SF	181,61	12,70	74,61	24,61	158,75	52,39	81,76	11,3	**PHP 8-B68-SF**
		177,8	7,0	188,0	7,4	A-1	SF	196,85	12,70	74,61	24,61	158,75	52,39	81,76	12,7	**PHP 8-B74-SF**
		208,3	8,2	218,4	8,6	A-1	E	227,33	22,23	88,90	30,96	158,75	69,85	57,94	18,1	**PHP 8-B86-E**
		228,6	9,0	238,8	9,4	A-2	E	247,65	22,23	88,90	30,96	158,75	69,85	57,94	19,5	**PHP 8-B94-E**
		269,2	10,6	279,4	11,0	A-3	E	288,29	22,23	88,90	30,96	158,75	69,85	57,94	22,2	**PHP 8-B110-E**
		304,8	12,0	315,0	12,4	A-3	E	323,85	22,23	88,90	30,96	158,75	69,85	57,94	25,4	**PHP 8-B124-E**
		381,0	15,0	391,2	15,4	A-3	E	400,05	22,23	88,90	30,96	158,75	69,85	57,94	31,3	**PHP 8-B154-E**
		457,2	18,0	467,4	18,4	D-3	F	476,25	25,40	101,60	0,79	158,75	95,25	64,29	41,3	**PHP 8-B184-F**
		497,8	19,6	508,0	20,0	D-3	F	516,89	25,40	101,60	0,79	158,75	95,25	64,29	44,5	**PHP 8-B200-F**
		624,8	24,6	635,0	25,0	D-3	F	643,89	25,40	101,60	0,79	158,75	95,25	64,29	54,9	**PHP 8-B250-F**
		751,8	29,6	762,0	30,0	D-3	F	770,89	25,40	101,60	0,79	158,75	95,25	64,29	67,1	**PHP 8-B300-F**
		955,0	37,6	965,2	38,0	D-3	F	974,09	25,40	101,60	0,79	158,75	95,25	64,29	88,0	**PHP 8-B380-F**
A/B	**10**	127,0	5,0	137,2	5,4	A-1	SK	146,05	12,70	66,68	45,24	196,85	49,21	102,39	8,2	**PHP 10-B54-SK**
		132,1	5,2	142,2	5,6	A-1	SK	151,13	12,70	66,68	45,24	196,85	49,21	102,39	9,1	**PHP 10-B56-SK**
		142,2	5,6	152,4	6,0	A-1	SF	161,29	12,70	74,61	42,86	196,85	52,39	100,81	10,9	**PHP 10-B60-SF**
		152,4	6,0	162,6	6,4	A-1	SF	171,45	12,70	74,61	42,86	196,85	52,39	100,81	11,8	**PHP 10-B64-SF**
		162,6	6,4	172,7	6,8	A-1	SF	181,61	12,70	74,61	42,86	196,85	52,39	100,81	12,7	**PHP 10-B68-SF**
		177,8	7,0	188,0	7,4	A-1	SF	196,85	12,70	74,61	42,86	196,85	52,39	100,81	14,5	**PHP 10-B74-SF**
		208,3	8,2	218,4	8,6	A-1	E	227,33	22,23	88,90	50,01	196,85	69,85	76,99	19,1	**PHP 10-B86-E**
		228,6	9,0	238,8	9,4	A-2	E	247,65	22,23	88,90	50,01	196,85	69,85	76,99	21,8	**PHP 10-B94-E**
		269,2	10,6	279,4	11,0	A-3	E	288,29	22,23	88,90	50,01	196,85	69,85	76,99	25,4	**PHP 10-B110-E**
		304,8	12,0	315,0	12,4	A-3	E	323,85	22,23	88,90	50,01	196,85	69,85	76,99	29,0	**PHP 10-B124-E**
		381,0	15,0	391,2	15,4	A-3	F	400,05	25,40	101,60	15,88	196,85	95,25	83,34	39,9	**PHP 10-B154-F**
		457,2	18,0	467,4	18,4	A-3	F	476,25	25,40	101,60	15,88	196,85	95,25	83,34	46,7	**PHP 10-B184-F**
		497,8	19,6	508,0	20,0	A-3	F	516,89	25,40	101,60	15,88	196,85	95,25	83,34	50,8	**PHP 10-B200-F**
		624,8	24,6	635,0	25,0	A-3	F	643,89	25,40	101,60	15,88	196,85	95,25	83,34	64,4	**PHP 10-B250-F**
		751,8	29,6	762,0	30,0	A-3	F	770,89	25,40	101,60	15,88	196,85	95,25	83,34	78,9	**PHP 10-B300-F**
		955,0	37,6	965,2	38,0	A-3	J	974,09	38,10	114,30	3,18	196,85	117,48	76,20	104,3	**PHP 10-B380-J**

[1] Please, note that 1 in pulley type stands for solid version, 2 for web version and 3 for arm/spoke version.
[2] Mass does not include bushings.

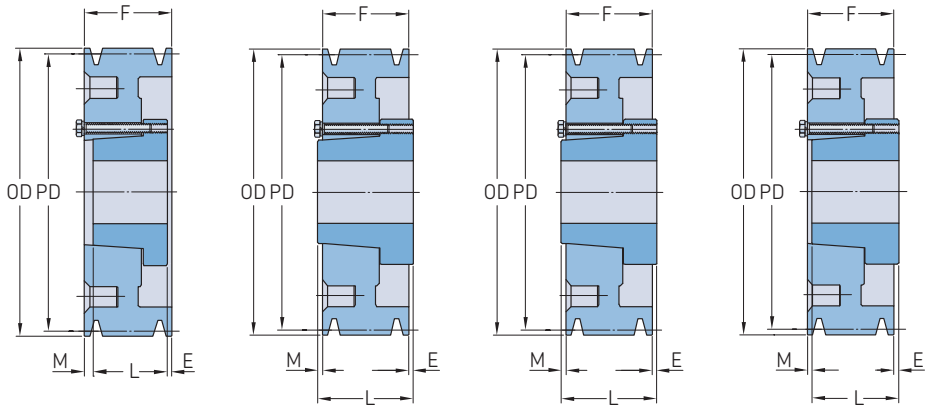

Type A Type B Type C Type D

Section	Number of grooves	Pitch diameter PD		Pulley type[1]	Bushing number	Dimensions Outer diameter OD	Bore Min.	Bore Max.	E	F	L	M	Mass[2]	Designation
–	–	mm	in.	–	–	mm							kg	–
C	1	177,8	7,0	D-1	SF	187,96	12,70	74,61	21,43	31,75	52,39	1	4,5	**PHP 1-C70-SF**
		190,5	7,5	D-2	SF	200,66	12,70	74,61	21,43	31,75	52,39	1	5,4	**PHP 1-C75-SF**
		203,2	8,0	D-2	SF	213,36	12,70	74,61	21,43	31,75	52,39	1	5,9	**PHP 1-C80-SF**
		215,9	8,5	D-2	SF	226,06	12,70	74,61	21,43	31,75	52,39	1	6,4	**PHP 1-C85-SF**
		228,6	9,0	D-3	SF	238,76	12,70	74,61	21,43	31,75	52,39	1	6,8	**PHP 1-C90-SF**
		241,3	9,5	D-3	SF	251,46	12,70	74,61	21,43	31,75	52,39	1	7,3	**PHP 1-C95-SF**
		254,0	10,0	D-3	SF	264,16	12,70	74,61	21,43	31,75	52,39	1	7,7	**PHP 1-C100-SF**
		266,7	10,5	D-3	SF	276,86	12,70	74,61	21,43	31,75	52,39	1	8,2	**PHP 1-C105-SF**
		279,4	11,0	D-3	SF	289,56	12,70	74,61	21,43	31,75	52,39	1	8,6	**PHP 1-C110-SF**
		304,8	12,0	D-3	SF	314,96	12,70	74,61	21,43	31,75	52,39	1	9,1	**PHP 1-C120-SF**
		330,2	13,0	D-3	SF	340,36	12,70	74,61	21,43	31,75	52,39	1	10,0	**PHP 1-C130-SF**
		355,6	14,0	D-3	SF	365,76	12,70	74,61	21,43	31,75	52,39	1	10,9	**PHP 1-C140-SF**
		406,4	16,0	D-3	SF	416,56	12,70	74,61	21,43	31,75	52,39	1	11,8	**PHP 1-C160-SF**
		457,2	18,0	D-3	SF	467,36	12,70	74,61	21,43	31,75	52,39	1	13,6	**PHP 1-C180-SF**
		508,0	20,0	D-3	SF	518,16	12,70	74,61	21,43	31,75	52,39	1	15,9	**PHP 1-C200-SF**
		609,6	24,0	D-3	SF	619,76	12,70	74,61	21,43	31,75	52,39	1	18,6	**PHP 1-C240-SF**
C	2	177,8	7,0	D-1	SF	187,96	12,70	74,61	2,38	57,15	52,39	7	6,8	**PHP 2-C70-SF**
		190,5	7,5	D-1	SF	200,66	12,70	74,61	2,38	57,15	52,39	7	7,7	**PHP 2-C75-SF**
		203,2	8,0	D-1	SF	213,36	12,70	74,61	2,38	57,15	52,39	7	8,2	**PHP 2-C80-SF**
		215,9	8,5	D-2	SF	226,06	12,70	74,61	2,38	57,15	52,39	7	8,6	**PHP 2-C85-SF**
		228,6	9,0	D-2	SF	238,76	12,70	74,61	2,38	57,15	52,39	7	9,1	**PHP 2-C90-SF**
		241,3	9,5	D-2	SF	251,46	12,70	74,61	2,38	57,15	52,39	7	9,5	**PHP 2-C95-SF**
		254,0	10,0	D-3	SF	264,16	12,70	74,61	2,38	57,15	52,39	7	10,0	**PHP 2-C100-SF**
		266,7	10,5	D-3	SF	276,86	12,70	74,61	2,38	57,15	52,39	7	10,4	**PHP 2-C105-SF**
		279,4	11,0	D-3	SF	289,56	12,70	74,61	2,38	57,15	52,39	7	10,9	**PHP 2-C110-SF**
		304,8	12,0	D-3	SF	314,96	12,70	74,61	8,73	57,15	52,39	13	11,3	**PHP 2-C120-SF**
		330,2	13,0	D-3	SF	340,36	12,70	74,61	8,73	57,15	52,39	13	12,7	**PHP 2-C130-SF**
		355,6	14,0	D-3	SF	365,76	12,70	74,61	8,73	57,15	52,39	13	14,1	**PHP 2-C140-SF**
		406,4	16,0	D-3	SF	416,56	12,70	74,61	8,73	57,15	52,39	13	16,3	**PHP 2-C160-SF**
		457,2	18,0	D-3	SF	467,36	12,70	74,61	8,73	57,15	52,39	13	17,7	**PHP 2-C180-SF**
		508,0	20,0	D-3	SF	518,16	12,70	74,61	8,73	57,15	52,39	13	21,8	**PHP 2-C200-SF**
		609,6	24,0	D-3	SF	619,76	12,70	74,61	8,73	57,15	52,39	13	27,2	**PHP 2-C240-SF**
		762,0	30,0	C-3	F	772,16	25,40	101,60	30,96	57,15	95,25	7	38,6	**PHP 2-C300-F**
C	3	127,0	5,0	A-1	SD	137,16	12,70	50,80	15,08	82,55	46,04	21	4,5	**PHP 3-C50-SD**
		139,7	5,5	A-1	SD	149,86	12,70	50,80	15,08	82,55	46,04	21	5,4	**PHP 3-C55-SD**
		152,4	6,0	D-1	SF	162,56	12,70	74,61	18,26	82,55	52,39	48	6,8	**PHP 3-C60-SF**
		177,8	7,0	A-1	SF	187,96	12,70	74,61	10,32	82,55	52,39	20	8,2	**PHP 3-C70-SF**
		190,5	7,5	A-1	SF	200,66	12,70	74,61	10,32	82,55	52,39	20	9,1	**PHP 3-C75-SF**
		203,2	8,0	B-1	E	213,36	22,23	88,90	13,49	82,55	69,85	1	11,8	**PHP 3-C80-E**
		215,9	8,5	B-1	E	226,06	22,23	88,90	13,49	82,55	69,85	1	13,2	**PHP 3-C85-E**
		228,6	9,0	A-1	E	238,76	22,23	88,90	11,91	82,55	69,85	1	14,5	**PHP 3-C90-E**
		241,3	9,5	A-2	E	251,46	22,23	88,90	11,91	82,55	69,85	1	15,4	**PHP 3-C95-E**
		254,0	10,0	A-2	E	264,16	22,23	88,90	11,91	82,55	69,85	1	16,3	**PHP 3-C100-E**
		266,7	10,5	A-3	E	276,86	22,23	88,90	11,91	82,55	69,85	1	17,2	**PHP 3-C105-E**
		279,4	11,0	A-3	E	289,56	22,23	88,90	11,91	82,55	69,85	1	18,1	**PHP 3-C110-E**
		304,8	12,0	A-3	E	314,96	22,23	88,90	11,91	82,55	69,85	1	19,5	**PHP 3-C120-E**
		330,2	13,0	A-3	E	340,36	22,23	88,90	11,91	82,55	69,85	1	20,4	**PHP 3-C130-E**
		355,6	14,0	A-3	E	365,76	22,23	88,90	11,91	82,55	69,85	1	23,1	**PHP 3-C140-E**
		406,4	16,0	A-3	E	416,56	22,23	88,90	11,91	82,55	69,85	1	26,8	**PHP 3-C160-E**
		457,2	18,0	A-3	E	467,36	22,23	88,90	11,91	82,55	69,85	1	29,5	**PHP 3-C180-E**
		508,0	20,0	D-3	E	518,16	22,23	88,90	5,56	82,55	69,85	18	31,8	**PHP 3-C200-E**
		609,6	24,0	D-3	E	619,76	22,23	88,90	5,56	82,55	69,85	18	36,3	**PHP 3-C240-E**
		685,8	27,0	D-3	F	695,96	25,40	101,60	16,67	82,55	95,25	4	47,6	**PHP 3-C270-F**

[1] Please, note that 1 in pulley type stands for solid version, 2 for web version and 3 for arm/spoke version.
[2] Mass does not include bushings.

Section	Number of grooves	Pitch diameter PD		Pulley type[1]	Bushing number	Dimensions Outer diameter OD	Bore Min.	Max.	E	F	L	M	Mass[2]	Designation
–	–	mm	in.	–	–	mm							kg	–
C	3	762,0	30,0	D-3	F	772,16	25,40	101,60	16,67	82,55	95,25	4	54,4	**PHP 3-C300-F**
		914,4	36,0	D-3	F	924,56	25,40	101,60	16,67	82,55	95,25	4	63,5	**PHP 3-C360-F**
		1117,6	44,0	D-3	F	1127,76	25,40	101,60	16,67	82,55	95,25	4	77,1	**PHP 3-C440-F**
		1270,0	50,0	D-3	F	1280,16	25,40	101,60	16,67	82,55	95,25	4	86,2	**PHP 3-C500-F**
C	4	127,0	5,0	A-1	SD	137,16	12,70	50,80	21,43	107,95	46,04	40	5,4	**PHP 4-C50-SD**
		139,7	5,5	A-1	SD	149,86	12,70	50,80	21,43	107,95	46,04	40	6,4	**PHP 4-C55-SD**
		152,4	6,0	A-1	SF	162,56	12,70	74,61	16,67	107,95	52,39	39	7,7	**PHP 4-C60-SF**
		177,8	7,0	A-1	SF	187,96	12,70	74,61	16,67	107,95	52,39	39	9,5	**PHP 4-C70-SF**
		190,5	7,5	A-1	SF	200,66	12,70	74,61	16,67	107,95	52,39	39	11,3	**PHP 4-C75-SF**
		203,2	8,0	A-1	E	213,36	22,23	88,90	19,84	107,95	69,85	18	13,6	**PHP 4-C80-E**
		215,9	8,5	A-1	E	226,06	22,23	88,90	19,84	107,95	69,85	18	15,0	**PHP 4-C85-E**
		228,6	9,0	A-1	E	238,76	22,23	88,90	19,84	107,95	69,85	18	15,9	**PHP 4-C90-E**
		241,3	9,5	A-2	E	251,46	22,23	88,90	19,84	107,95	69,85	18	17,2	**PHP 4-C95-E**
		254,0	10,0	A-2	E	264,16	22,23	88,90	19,84	107,95	69,85	18	18,1	**PHP 4-C100-E**
		266,7	10,5	A-2	E	276,86	22,23	88,90	19,84	107,95	69,85	18	19,5	**PHP 4-C105-E**
		279,4	11,0	A-2	E	289,56	22,23	88,90	19,84	107,95	69,85	18	20,9	**PHP 4-C110-E**
		304,8	12,0	A-3	E	314,96	22,23	88,90	19,84	107,95	69,85	18	22,7	**PHP 4-C120-E**
		330,2	13,0	A-3	E	340,36	22,23	88,90	19,84	107,95	69,85	18	24,5	**PHP 4-C130-E**
		355,6	14,0	A-3	E	365,76	22,23	88,90	19,84	107,95	69,85	18	26,8	**PHP 4-C140-E**
		406,4	16,0	A-3	E	416,56	22,23	88,90	19,84	107,95	69,85	18	29,5	**PHP 4-C160-E**
		457,2	18,0	A-3	E	467,36	22,23	88,90	19,84	107,95	69,85	18	33,1	**PHP 4-C180-E**
		508,0	20,0	A-3	E	518,16	22,23	88,90	7,14	107,95	69,85	31	37,2	**PHP 4-C200-E**
		609,6	24,0	D-3	F	619,76	25,40	101,60	2,38	107,95	95,25	15	47,6	**PHP 4-C240-F**
		685,8	27,0	D-3	F	695,96	25,40	101,60	2,38	107,95	95,25	15	56,7	**PHP 4-C270-F**
		762,0	30,0	D-3	F	772,16	25,40	101,60	2,38	107,95	95,25	15	64,4	**PHP 4-C300-F**
		914,4	36,0	D-3	F	924,56	25,40	101,60	2,38	107,95	95,25	15	78,0	**PHP 4-C360-F**
		1117,6	44,0	C-3	J	1127,76	38,10	114,30	–	107,95	117,48	10	102,1	**PHP 4-C440-J**
		1270,0	50,0	C-3	J	1280,16	38,10	114,30	–	107,95	117,48	10	117,9	**PHP 4-C500-J**
C	5	152,4	6,0	A-1	SF	162,56	12,70	74,61	26,19	133,35	52,39	55	9,5	**PHP 5-C60-SF**
		177,8	7,0	A-1	SF	187,96	12,70	74,61	26,19	133,35	52,39	55	11,8	**PHP 5-C70-SF**
		190,5	7,5	A-1	SF	200,66	12,70	74,61	26,19	133,35	52,39	55	12,7	**PHP 5-C75-SF**
		203,2	8,0	A-1	E	213,36	22,23	88,90	29,37	133,35	69,85	34	15,0	**PHP 5-C80-E**
		215,9	8,5	A-1	E	226,06	22,23	88,90	29,37	133,35	69,85	34	16,8	**PHP 5-C85-E**
		228,6	9,0	A-1	E	238,76	22,23	88,90	29,37	133,35	69,85	34	18,1	**PHP 5-C90-E**
		241,3	9,5	A-2	E	251,46	22,23	88,90	29,37	133,35	69,85	34	19,1	**PHP 5-C95-E**
		254,0	10,0	A-2	E	264,16	22,23	88,90	29,37	133,35	69,85	34	20,4	**PHP 5-C100-E**
		266,7	10,5	A-2	E	276,86	22,23	88,90	29,37	133,35	69,85	34	21,3	**PHP 5-C105-E**
		279,4	11,0	A-2	E	289,56	22,23	88,90	29,37	133,35	69,85	34	22,7	**PHP 5-C110-E**
		304,8	12,0	A-2	E	314,96	22,23	88,90	29,37	133,35	69,85	34	24,0	**PHP 5-C120-E**
		330,2	13,0	A-3	E	340,36	22,23	88,90	29,37	133,35	69,85	34	26,3	**PHP 5-C130-E**
		355,6	14,0	A-3	E	365,76	22,23	88,90	29,37	133,35	69,85	34	29,0	**PHP 5-C140-E**
		406,4	16,0	A-3	E	416,56	22,23	88,90	29,37	133,35	69,85	34	33,1	**PHP 5-C160-E**
		457,2	18,0	A-3	E	467,36	22,23	88,90	29,37	133,35	69,85	34	38,6	**PHP 5-C180-E**
		508,0	20,0	D-3	F	518,16	25,40	101,60	2,38	133,35	95,25	40	44,5	**PHP 5-C200-F**
		609,6	24,0	D-3	F	619,76	25,40	101,60	2,38	133,35	95,25	40	54,0	**PHP 5-C240-F**
		685,8	27,0	D-3	F	695,96	25,40	101,60	2,38	133,35	95,25	40	69,4	**PHP 5-C270-F**
		762,0	30,0	D-3	F	772,16	25,40	101,60	2,38	133,35	95,25	40	78,9	**PHP 5-C300-F**
		914,4	36,0	A-3	J	924,56	38,10	114,30	1,59	133,35	117,48	14	93,4	**PHP 5-C360-J**
		1117,6	44,0	A-3	J	1127,76	38,10	114,30	1,59	133,35	117,48	14	115,2	**PHP 5-C440-J**
		1270,0	50,0	A-3	J	1280,16	38,10	114,30	1,59	133,35	117,48	14	124,3	**PHP 5-C500-J**
C	6	152,4	6,0	A-1	SF	162,56	12,70	74,61	26,19	158,75	52,39	80	9,1	**PHP 6-C60-SF**
		177,8	7,0	A-1	SF	187,96	12,70	74,61	26,19	158,75	52,39	80	11,8	**PHP 6-C70-SF**
		190,5	7,5	A-1	SF	200,66	12,70	74,61	26,19	158,75	52,39	80	13,2	**PHP 6-C75-SF**
		203,2	8,0	A-1	E	213,36	22,23	88,90	29,37	158,75	69,85	60	16,3	**PHP 6-C80-E**
		215,9	8,5	A-1	E	226,06	22,23	88,90	29,37	158,75	69,85	60	17,7	**PHP 6-C85-E**
		228,6	9,0	A-1	F	238,76	25,40	101,60	26,19	158,75	95,25	37	23,1	**PHP 6-C90-F**
		241,3	9,5	A-1	F	251,46	25,40	101,60	26,19	158,75	95,25	37	25,0	**PHP 6-C95-F**
		254,0	10,0	A-1	F	264,16	25,40	101,60	26,19	158,75	95,25	37	26,8	**PHP 6-C100-F**
		266,7	10,5	A-2	F	276,86	25,40	101,60	26,19	158,75	95,25	37	28,1	**PHP 6-C105-F**
		279,4	11,0	A-2	F	289,56	25,40	101,60	26,19	158,75	95,25	37	29,9	**PHP 6-C110-F**
		304,8	12,0	A-2	F	314,96	25,40	101,60	26,19	158,75	95,25	37	31,8	**PHP 6-C120-F**
		330,2	13,0	A-3	F	340,36	25,40	101,60	26,19	158,75	95,25	37	33,6	**PHP 6-C130-F**
		355,6	14,0	A-3	F	365,76	25,40	101,60	26,19	158,75	95,25	37	36,3	**PHP 6-C140-F**
		406,4	16,0	A-3	F	416,56	25,40	101,60	26,19	158,75	95,25	37	40,4	**PHP 6-C160-F**
		457,2	18,0	A-3	F	467,36	25,40	101,60	26,19	158,75	95,25	37	46,3	**PHP 6-C180-F**
		508,0	20,0	A-3	F	518,16	25,40	101,60	13,49	158,75	95,25	50	50,8	**PHP 6-C200-F**
		609,6	24,0	A-3	F	619,76	25,40	101,60	13,49	158,75	95,25	50	59,4	**PHP 6-C240-F**
		685,8	27,0	A-3	J	695,96	38,10	114,30	1,59	158,75	117,48	40	72,6	**PHP 6-C270-J**
		762,0	30,0	A-3	J	772,16	38,10	114,30	1,59	158,75	117,48	40	86,2	**PHP 6-C300-J**
		914,4	36,0	A-3	J	924,56	38,10	114,30	1,59	158,75	117,48	40	105,2	**PHP 6-C360-J**
		1117,6	44,0	A-3	J	1127,76	38,10	114,30	1,59	158,75	117,48	40	135,6	**PHP 6-C440-J**
		1270,0	50,0	B-3	M	1280,16	50,80	139,70	5,56	158,75	171,45	18	145,2	**PHP 6-C500-M**

[1] Please, note that 1 in pulley type stands for solid version, 2 for web version and 3 for arm/spoke version.
[2] Mass does not include bushings.

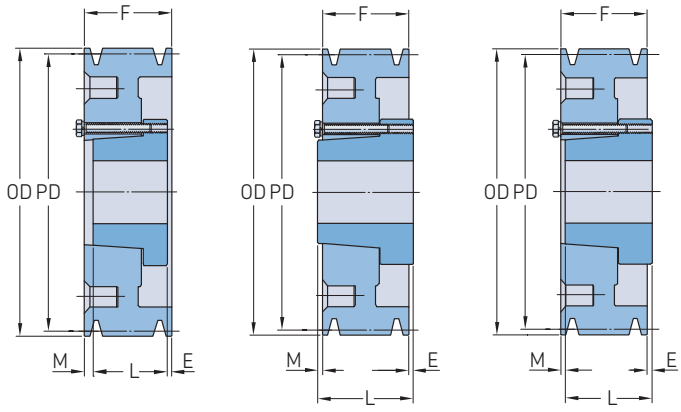

Section	Number of grooves	Pitch diameter PD		Pulley type[1]	Bushing number	Dimensions Outer diameter OD	Bore Min.	Bore Max.	E	F	L	M	Mass[2]	Designation
–	–	mm	in.	–	–	mm							kg	–
C	**8**	203,2	8,0	A-1	E	213,36	22,23	88,90	51,59	209,55	69,85	88	19,5	**PHP 8-C80-E**
		215,9	8,5	A-1	E	226,06	22,23	88,90	76,99	209,55	69,85	88	21,8	**PHP 8-C85-E**
		228,6	9,0	A-1	F	238,76	25,40	101,60	48,42	209,55	95,25	66	27,2	**PHP 8-C90-F**
		241,3	9,5	A-1	F	251,46	25,40	101,60	48,42	209,55	95,25	66	29,5	**PHP 8-C95-F**
		254,0	10,0	A-1	F	264,16	25,40	101,60	48,42	209,55	95,25	66	31,3	**PHP 8-C100-F**
		266,7	10,5	A-2	F	276,86	25,40	101,60	48,42	209,55	95,25	66	33,1	**PHP 8-C105-F**
		279,4	11,0	A-2	F	289,56	25,40	101,60	48,42	209,55	95,25	66	35,4	**PHP 8-C110-F**
		304,8	12,0	A-3	F	314,96	25,40	101,60	48,42	209,55	95,25	66	37,7	**PHP 8-C120-F**
		330,2	13,0	A-3	F	340,36	25,40	101,60	48,42	209,55	95,25	66	40,4	**PHP 8-C130-F**
		355,6	14,0	A-3	F	365,76	25,40	101,60	48,42	209,55	95,25	66	44,0	**PHP 8-C140-F**
		406,4	16,0	A-3	F	416,56	25,40	101,60	48,42	209,55	95,25	66	51,3	**PHP 8-C160-F**
		457,2	18,0	A-3	F	467,36	25,40	101,60	48,42	209,55	95,25	66	59,4	**PHP 8-C180-F**
		508,0	20,0	A-3	J	518,16	38,10	114,30	1,59	209,55	117,48	90	69,0	**PHP 8-C200-J**
		609,6	24,0	A-3	J	619,76	38,10	114,30	1,59	209,55	117,48	90	83,9	**PHP 8-C240-J**
		685,8	27,0	A-3	J	695,96	38,10	114,30	1,59	209,55	117,48	90	94,4	**PHP 8-C270-J**
		762,0	30,0	A-3	J	772,16	38,10	114,30	1,59	209,55	117,48	90	104,3	**PHP 8-C300-J**
		914,4	36,0	A-3	M	924,56	50,80	139,70	7,14	209,55	171,45	31	138,8	**PHP 8-C360-M**
		1117,6	44,0	A-3	M	1127,76	50,80	139,70	7,14	209,55	171,45	31	181,4	**PHP 8-C440-M**
		1270,0	50,0	A-3	M	1280,16	50,80	139,70	7,14	209,55	171,45	31	215,5	**PHP 8-C500-M**
D	**3**	304,8	12,0	A-2	F	321,06	25,40	101,60	3,97	117,48	95,25	18	31,8	**PHP 3-D120-F**
		330,2	13,0	A-2	F	346,46	25,40	101,60	3,97	117,48	95,25	18	34,5	**PHP 3-D130-F**
		342,9	13,5	A-2	F	359,16	25,40	101,60	3,97	117,48	95,25	18	35,8	**PHP 3-D135-F**
		355,6	14,0	A-2	F	371,86	25,40	101,60	3,97	117,48	95,25	18	37,2	**PHP 3-D140-F**
		368,3	14,5	A-3	F	384,56	25,40	101,60	3,97	117,48	95,25	18	38,6	**PHP 3-D145-F**
		381,0	15,0	A-3	F	397,26	25,40	101,60	3,97	117,48	95,25	18	40,4	**PHP 3-D150-F**
		393,7	15,5	A-3	F	409,96	25,40	101,60	3,97	117,48	95,25	18	41,7	**PHP 3-D155-F**
		406,4	16,0	A-3	F	422,66	25,40	101,60	3,97	117,48	95,25	18	43,5	**PHP 3-D160-F**
		457,2	18,0	D-3	J	473,46	38,10	114,30	6,35	117,48	117,48	6	49,9	**PHP 3-D180-J**
		508,0	20,0	D-3	J	524,26	38,10	114,30	6,35	117,48	117,48	6	54,4	**PHP 3-D200-J**
		558,8	22,0	D-3	J	575,06	38,10	114,30	6,35	117,48	117,48	6	59,0	**PHP 3-D220-J**
		685,8	27,0	D-3	J	702,06	38,10	114,30	6,35	117,48	117,48	6	78,5	**PHP 3-D270-J**
		838,2	33,0	D-3	J	854,46	38,10	114,30	6,35	117,48	117,48	6	108,9	**PHP 3-D330-J**
		1016,0	40,0	D-3	J	1032,26	38,10	114,30	6,35	117,48	117,48	6	136,1	**PHP 3-D440-J**
D	**4**	304,8	12,0	A-2	F	321,06	25,40	101,60	24,61	153,99	95,25	34	37,7	**PHP 4-D120-F**
		330,2	13,0	A-2	F	346,46	25,40	101,60	24,61	153,99	95,25	34	39,0	**PHP 4-D130-F**
		342,9	13,5	A-2	F	359,16	25,40	101,60	24,61	153,99	95,25	34	40,4	**PHP 4-D135-F**
		355,6	14,0	A-2	F	371,86	25,40	101,60	24,61	153,99	95,25	34	41,7	**PHP 4-D140-F**
		368,3	14,5	A-3	F	384,56	25,40	101,60	24,61	153,99	95,25	34	43,1	**PHP 4-D145-F**
		381,0	15,0	A-3	F	397,26	25,40	101,60	24,61	153,99	95,25	34	44,9	**PHP 4-D150-F**
		393,7	15,5	A-3	F	409,96	25,40	101,60	24,61	153,99	95,25	34	46,3	**PHP 4-D155-F**
		406,4	16,0	A-3	F	422,66	25,40	101,60	24,61	153,99	95,25	34	48,1	**PHP 4-D160-F**
		457,2	18,0	A-3	J	473,46	38,10	114,30	3,18	153,99	117,48	33	54,4	**PHP 4-D180-J**
		508,0	20,0	A-3	J	524,26	38,10	114,30	3,18	153,99	117,48	33	59,9	**PHP 4-D200-J**
		558,8	22,0	A-3	J	575,06	38,10	114,30	3,18	153,99	117,48	33	70,3	**PHP 4-D220-J**
		685,8	27,0	A-3	J	702,06	38,10	114,30	3,18	153,99	117,48	33	87,5	**PHP 4-D270-J**
		838,2	33,0	B-3	M	854,46	50,80	139,70	8,73	153,99	171,45	26	127,0	**PHP 4-D330-M**
		1016,0	40,0	B-3	M	1032,26	50,80	139,70	8,73	153,99	171,45	26	157,9	**PHP 4-D440-M**
		1219,2	48,0	B-3	M	1235,46	50,80	139,70	8,73	153,99	171,45	26	172,4	**PHP 4-D480-M**
		1473,2	58,0	B-3	M	1489,46	50,80	139,70	8,73	153,99	171,45	26	190,5	**PHP 4-D580-M**
D	**5**	304,8	12,0	A-2	F	321,06	25,40	101,60	43,66	190,50	95,25	52	42,2	**PHP 5-D120-F**
		330,2	13,0	A-2	F	346,46	25,40	101,60	43,66	190,50	95,25	52	43,5	**PHP 5-D130-F**
		342,9	13,5	A-2	F	359,16	25,40	101,60	43,66	190,50	95,25	52	46,3	**PHP 5-D135-F**
		355,6	14,0	A-2	F	371,86	25,40	101,60	43,66	190,50	95,25	52	48,1	**PHP 5-D140-F**

[1] Please, note that 1 in pulley type stands for solid version, 2 for web version and 3 for arm/spoke version.
[2] Mass does not include bushings.

Section	Number of grooves	Pitch diameter PD		Pulley type[1]	Bushing number	Dimensions Outer diameter OD	Bore Min.	Bore Max.	E	F	L	M	Mass[2]	Designation
–	–	mm	in.	–	–	mm							kg	–
D	**5**	368,3	14,5	A-3	F	384,56	25,40	101,60	43,66	190,50	95,25	52	50,8	**PHP 5-D145-F**
		381,0	15,0	A-3	F	397,26	25,40	101,60	43,66	190,50	95,25	52	54,4	**PHP 5-D150-F**
		393,7	15,5	A-3	F	409,96	25,40	101,60	43,66	190,50	95,25	52	56,7	**PHP 5-D155-F**
		406,4	16,0	A-3	F	422,66	25,40	101,60	43,66	190,50	95,25	52	59,0	**PHP 5-D160-F**
		457,2	18,0	A-3	J	473,46	38,10	114,30	47,63	190,50	117,48	25	68,0	**PHP 5-D180-J**
		508,0	20,0	A-3	J	524,26	38,10	114,30	3,18	190,50	117,48	70	72,6	**PHP 5-D200-J**
		558,8	22,0	A-3	J	575,06	38,10	114,30	3,18	190,50	117,48	70	86,2	**PHP 5-D220-J**
		685,8	27,0	A-3	M	702,06	50,80	139,70	8,73	190,50	171,45	10	117,9	**PHP 5-D270-M**
		838,2	33,0	A-3	M	854,46	50,80	139,70	8,73	190,50	171,45	10	145,2	**PHP 5-D330-M**
		1016,0	40,0	A-3	M	1032,26	50,80	139,70	8,73	190,50	171,45	10	176,9	**PHP 5-D400-M**
		1219,2	48,0	A-3	M	1235,46	50,80	139,70	8,73	190,50	171,45	10	204,1	**PHP 5-D480-M**
		1473,2	58,0	A-3	M	1489,46	50,80	139,70	8,73	190,50	171,45	10	226,8	**PHP 5-D580-M**
D	**6**	304,8	12,0	A-1	J	321,06	38,10	114,30	47,63	227,01	117,48	62	52,2	**PHP 6-D120-J**
		330,2	13,0	A-2	J	346,46	38,10	114,30	47,63	227,01	117,48	62	56,7	**PHP 6-D130-J**
		342,9	13,5	A-2	J	359,16	38,10	114,30	47,63	227,01	117,48	62	61,2	**PHP 6-D135-J**
		355,6	14,0	A-2	J	371,86	38,10	114,30	47,63	227,01	117,48	62	65,8	**PHP 6-D140-J**
		368,3	14,5	A-2	J	384,56	38,10	114,30	47,63	227,01	117,48	62	68,0	**PHP 6-D145-J**
		381,0	15,0	A-2	J	397,26	38,10	114,30	47,63	227,01	117,48	62	72,6	**PHP 6-D150-J**
		393,7	15,5	A-3	J	409,96	38,10	114,30	47,63	227,01	117,48	62	74,8	**PHP 6-D155-J**
		406,4	16,0	A-3	J	422,66	38,10	114,30	47,63	227,01	117,48	62	77,1	**PHP 6-D160-J**
		457,2	18,0	A-3	J	473,46	38,10	114,30	47,63	227,01	117,48	62	81,7	**PHP 6-D180-J**
		508,0	20,0	A-3	J	524,26	38,10	114,30	47,63	227,01	117,48	62	97,5	**PHP 6-D200-J**
		558,8	22,0	A-3	M	575,06	50,80	139,70	8,73	227,01	171,45	43	113,4	**PHP 6-D220-M**
		685,8	27,0	A-3	M	702,06	50,80	139,70	8,73	227,01	171,45	43	136,1	**PHP 6-D270-M**
		838,2	33,0	A-3	M	854,46	50,80	139,70	8,73	227,01	171,45	43	163,3	**PHP 6-D330-M**
		1016,0	40,0	A-3	M	1032,26	50,80	139,70	8,73	227,01	171,45	43	199,6	**PHP 6-D400-M**
		1219,2	48,0	A-3	M	1235,46	50,80	139,70	8,73	227,01	171,45	43	254,0	**PHP 6-D480-M**
		1473,2	58,0	A-3	N	1489,46	61,91	149,23	4,76	227,01	206,38	16	299,4	**PHP 6-D580-N**
D	**8**	304,8	12,0	A-1	J	321,06	38,10	114,30	53,98	300,04	117,48	129	63,5	**PHP 8-D120-J**
		330,2	13,0	A-2	J	346,46	38,10	114,30	53,98	300,04	117,48	129	68,0	**PHP 8-D130-J**
		342,9	13,5	A-2	J	359,16	38,10	114,30	53,98	300,04	117,48	129	72,6	**PHP 8-D135-J**
		355,6	14,0	A-2	J	371,86	38,10	114,30	53,98	300,04	117,48	129	77,1	**PHP 8-D140-J**
		368,3	14,5	A-2	J	384,56	38,10	114,30	53,98	300,04	117,48	129	80,7	**PHP 8-D145-J**
		381,0	15,0	A-2	J	397,26	38,10	114,30	53,98	300,04	117,48	129	82,6	**PHP 8-D150-J**
		393,7	15,5	A-2	J	409,96	38,10	114,30	53,98	300,04	117,48	129	86,2	**PHP 8-D155-J**
		406,4	16,0	A-2	J	422,66	38,10	114,30	53,98	300,04	117,48	129	91,2	**PHP 8-D160-J**
		457,2	18,0	A-3	M	473,46	50,80	139,70	59,53	300,04	171,45	69	117,9	**PHP 8-D180-M**
		508,0	20,0	A-3	M	524,26	50,80	139,70	59,53	300,04	171,45	69	122,5	**PHP 8-D200-M**
		558,8	22,0	A-3	M	575,06	50,80	139,70	8,73	300,04	171,45	120	136,1	**PHP 8-D220-M**
		685,8	27,0	A-3	M	702,06	50,80	139,70	8,73	300,04	171,45	120	158,8	**PHP 8-D270-M**
		838,2	33,0	A-3	M	854,46	50,80	139,70	8,73	300,04	171,45	120	204,1	**PHP 8-D330-M**
		1016,0	40,0	A-3	N	1032,26	61,91	149,23	4,76	300,04	206,38	89	249,5	**PHP 8-D400-N**
		1219,2	48,0	A-3	N	1235,46	61,91	149,23	4,76	300,04	206,38	89	326,6	**PHP 8-D480-N**
		1473,2	58,0	A-3	N	1489,46	61,91	149,23	4,76	300,04	206,38	89	408,2	**PHP 8-D580-N**
D	**10**	304,8	12,0	A-1	M	321,06	50,80	139,70	59,53	373,06	171,45	148	86,2	**PHP 10-D120-M**
		330,2	13,0	A-1	M	346,46	50,80	139,70	59,53	373,06	171,45	148	99,8	**PHP 10-D130-M**
		342,9	13,5	A-1	M	359,16	50,80	139,70	59,53	373,06	171,45	148	108,9	**PHP 10-D135-M**
		355,6	14,0	A-1	M	371,86	50,80	139,70	59,53	373,06	171,45	148	113,4	**PHP 10-D140-M**
		368,3	14,5	A-2	M	384,56	50,80	139,70	59,53	373,06	171,45	148	117,9	**PHP 10-D145-M**
		381,0	15,0	A-2	M	397,26	50,80	139,70	59,53	373,06	171,45	148	122,5	**PHP 10-D150-M**
		393,7	15,5	A-2	M	409,96	50,80	139,70	59,53	373,06	171,45	148	127,0	**PHP 10-D155-M**
		406,4	16,0	A-2	M	422,66	50,80	139,70	59,53	373,06	171,45	148	131,5	**PHP 10-D160-M**
		457,2	18,0	A-2	M	473,46	50,80	139,70	59,53	373,06	171,45	148	140,6	**PHP 10-D180-M**
		508,0	20,0	A-2	M	524,26	50,80	139,70	59,53	373,06	171,45	148	149,7	**PHP 10-D200-M**
		558,8	22,0	A-3	M	575,06	50,80	139,70	59,53	373,06	171,45	173	158,8	**PHP 10-D220-M**
		685,8	27,0	A-3	M	702,06	50,80	139,70	59,53	373,06	171,45	173	199,6	**PHP 10-D270-M**
		838,2	33,0	A-3	N	854,46	61,91	149,23	30,16	373,06	206,38	143	226,8	**PHP 10-D330-N**
		1016,0	40,0	A-3	N	1032,26	61,91	149,23	30,16	373,06	206,38	143	294,8	**PHP 10-D400-N**
		1219,2	48,0	A-3	P	1235,46	74,61	177,80	6,35	373,06	238,13	129	417,3	**PHP 10-D480-P**
		1473,2	58,0	A-3	P	1489,46	74,61	177,80	6,35	373,06	238,13	129	499,0	**PHP 10-D580-P**
D	**12**	304,8	12,0	A-1	M	321,06	50,80	139,70	84,93	446,09	171,45	190	99,8	**PHP 12-D120-M**
		330,2	13,0	A-1	M	346,46	50,80	139,70	84,93	446,09	171,45	190	113,4	**PHP 12-D130-M**
		342,9	13,5	A-1	M	359,16	50,80	139,70	84,93	446,09	171,45	190	122,5	**PHP 12-D135-M**
		355,6	14,0	A-1	M	371,86	50,80	139,70	84,93	446,09	171,45	190	127,0	**PHP 12-D140-M**
		368,3	14,5	A-1	M	384,56	50,80	139,70	84,93	446,09	171,45	190	136,1	**PHP 12-D145-M**
		381,0	15,0	A-2	M	397,26	50,80	139,70	84,93	446,09	171,45	190	138,4	**PHP 12-D150-M**
		393,7	15,5	A-1	M	409,96	50,80	139,70	84,93	446,09	171,45	190	140,6	**PHP 12-D155-M**
		406,4	16,0	A-2	M	422,66	50,80	139,70	84,93	446,09	171,45	190	145,2	**PHP 12-D160-M**
		457,2	18,0	A-2	M	473,46	50,80	139,70	84,93	446,09	171,45	190	154,2	**PHP 12-D180-M**
		508,0	20,0	A-2	M	524,26	50,80	139,70	84,93	446,09	171,45	190	163,3	**PHP 12-D200-M**
		558,8	22,0	A-3	M	575,06	50,80	139,70	59,53	446,09	171,45	215	181,4	**PHP 12-D220-M**

[1] Please, note that 1 in pulley type stands for solid version, 2 for web version and 3 for arm/spoke version.
[2] Mass does not include bushings.

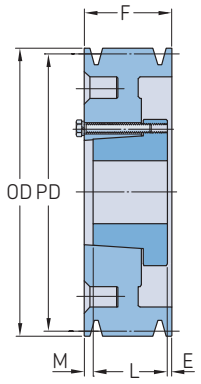

Type A

Section	Number of grooves	Pitch diameter PD		Pulley type[1]	Bushing number	Dimensions Outer diameter OD	Bore Min.	Bore Max.	E	F	L	M	Mass[2]	Designation
–	–	mm	in.	–	–	mm							kg	–
D	**12**	685,8	27,0	A-3	N	702,06	61,91	149,23	55,56	446,09	206,38	184	235,9	**PHP 12-D270-N**
		838,2	33,0	A-3	N	854,46	61,91	149,23	58,74	446,09	206,38	184	301,6	**PHP 12-D330-N**
		1016,0	40,0	A-3	P	1032,26	74,61	177,80	6,35	446,09	238,13	202	394,6	**PHP 12-D400-P**
		1219,2	48,0	A-3	P	1235,46	74,61	177,80	6,35	446,09	238,13	202	494,4	**PHP 12-D480-P**
		1473,2	58,0	A-3	P	1489,46	74,61	177,80	6,35	446,09	238,13	202	589,7	**PHP 12-D580-P**

[1] Please, note that 1 in pulley type stands for solid version, 2 for web version and 3 for arm/spoke version.
[2] Mass does not include bushings.

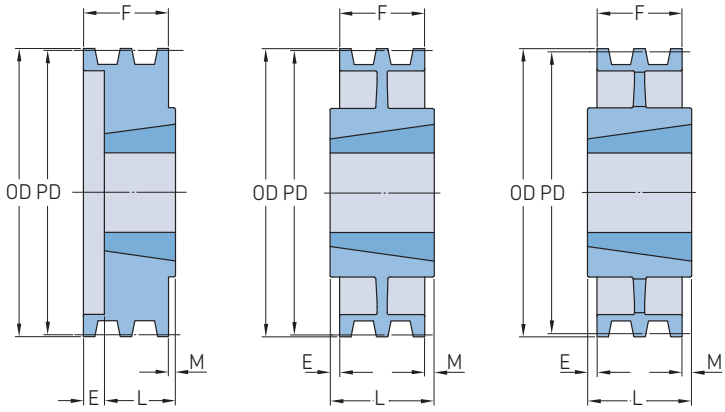

Section	Number of grooves	Pitch diameter PD	Pulley type	Bushing number	Dimensions Outer diameter OD		B Min.	B Max.	F	E	L	M	Mass[2]	Designation
–	–	mm	–	–	mm	in.							kg	–
3V	**1**	66,04	B-1	1108	67,31	2,65	9,53	28,58	26,99	5,56	22,23	27,78	0,34	**PHP 1-3V265TB**
		69,85	B-1	1108	71,12	2,80	9,53	28,58	26,99	5,56	22,23	27,78	0,39	**PHP 1-3V280TB**
		74,93	B-1	1108	76,20	3,00	9,53	28,58	26,99	5,56	22,23	27,78	0,45	**PHP 1-3V300TB**
		78,74	B-1	1108	80,01	3,15	9,53	28,58	26,99	5,56	22,23	27,78	0,45	**PHP 1-3V315TB**
		83,82	B-1	1610	85,09	3,35	12,70	41,28	26,99	2,38	25,40	27,78	0,50	**PHP 1-3V335TB**
		91,44	B-1	1610	92,71	3,65	12,70	41,28	26,99	2,38	25,40	27,78	0,59	**PHP 1-3V365TB**
		103,38	B-1	1610	104,65	4,12	12,70	41,28	26,99	2,38	25,40	27,78	0,91	**PHP 1-3V412TB**
		113,03	B-1	1610	114,30	4,50	12,70	41,28	26,99	2,38	25,40	27,78	1,04	**PHP 1-3V450TB**
		119,38	B-1	1610	120,65	4,75	12,70	41,28	26,99	2,38	25,40	27,78	1,18	**PHP 1-3V475TB**
		125,73	B-1	1610	127,00	5,00	12,70	41,28	26,99	2,38	25,40	27,78	1,32	**PHP 1-3V500TB**
		133,35	B-1	1610	134,62	5,30	12,70	41,28	26,99	2,38	25,40	27,78	1,50	**PHP 1-3V530TB**
		140,97	B-1	1610	142,24	5,60	12,70	41,28	26,99	2,38	25,40	27,78	1,68	**PHP 1-3V560TB**
		151,13	B-1	1610	152,40	6,00	12,70	41,28	26,99	2,38	25,40	27,78	1,91	**PHP 1-3V600TB**
		163,83	B-1	1610	165,10	6,50	12,70	41,28	26,99	2,38	25,40	27,78	2,27	**PHP 1-3V650TB**
		173,99	B-1	1610	175,26	6,90	12,70	41,28	26,99	2,38	25,40	27,78	2,54	**PHP 1-3V690TB**
		201,93	C-2	2517[1]	203,20	8,00	19,05	63,50	26,99	–	44,45	27,78	3,86	**PHP 1-3V800TB**
		267,97	C-2	2517[1]	269,24	10,60	19,05	63,50	26,99	–	44,45	27,78	6,35	**PHP 1-3V1060TB**
		354,33	C-3	2517[1]	355,60	14,00	19,05	63,50	26,99	–	44,45	27,78	9,07	**PHP 1-3V1400TB**
		481,33	C-3	3020	482,60	19,00	31,75	76,20	26,99	–	50,80	27,78	11,79	**PHP 1-3V1900TB**
3V	**2**	66,04	B-1	1108	67,31	2,65	9,53	28,58	27,78	5,56	22,23	–	0,34	**PHP 2-3V265TB**
		69,85	B-1	1108	71,12	2,80	9,53	28,58	27,78	12,70	22,23	27,78	0,41	**PHP 2-3V280TB**
		74,93	B-1	1210	76,20	3,00	15,88	31,75	27,78	2,38	25,40	–	0,64	**PHP 2-3V300TB**
		78,74	B-1	1210	80,01	3,15	15,88	31,75	27,78	12,70	25,40	27,78	0,45	**PHP 2-3V315TB**
		83,82	B-1	1610	85,09	3,35	12,70	41,28	27,78	12,70	25,40	27,78	0,68	**PHP 2-3V335TB**
		91,44	B-1	1610	92,71	3,65	12,70	41,28	27,78	2,38	25,40	–	0,73	**PHP 2-3V365TB**
		103,38	B-1	1610	104,65	4,12	12,70	41,28	27,78	2,38	25,40	–	0,95	**PHP 2-3V412TB**
		113,03	B-1	1610	114,30	4,50	12,70	41,28	27,78	2,38	25,40	–	1,22	**PHP 2-3V450TB**
		119,38	B-1	1610	120,65	4,75	12,70	41,28	27,78	2,38	25,40	–	1,41	**PHP 2-3V475TB**
		125,73	B-1	1610	127,00	5,00	12,70	41,28	27,78	2,38	25,40	–	1,63	**PHP 2-3V500TB**
		133,35	B-1	1610	134,62	5,30	12,70	41,28	27,78	2,38	25,40	–	1,91	**PHP 2-3V530TB**
		140,97	B-1	1610	142,24	5,60	12,70	41,28	27,78	2,38	25,40	–	2,18	**PHP 2-3V560TB**
		151,13	B-1	1610	152,40	6,00	12,70	41,28	27,78	2,38	25,40	–	2,63	**PHP 2-3V600TB**
		163,83	B-1	1610	165,10	6,50	12,70	41,28	27,78	2,38	25,40	–	3,18	**PHP 2-3V650TB**
		173,99	B-1	1610	175,26	6,90	12,70	41,28	27,78	2,38	25,40	–	3,63	**PHP 2-3V690TB**
		201,93	C-2	2517[1]	203,20	8,00	19,05	63,50	27,78	–	44,45	16,67	4,99	**PHP 2-3V800TB**
		267,97	C-2	2517[1]	269,24	10,60	19,05	63,50	27,78	–	44,45	16,67	6,80	**PHP 2-3V1060TB**
		354,33	C-3	2517[1]	355,60	14,00	19,05	63,50	27,78	–	44,45	16,67	9,98	**PHP 2-3V1400TB**
		481,33	C-3	3020	482,60	19,00	31,75	76,20	27,78	3,18	50,80	23,02	14,51	**PHP 2-3V1900TB**
		633,73	C-3	3020	635,00	25,00	31,75	76,20	27,78	3,18	50,80	19,84	20,41	**PHP 2-3V2500TB**
3V	**3**	69,85	B-1	1108	71,12	2,80	9,53	28,58	38,10	15,88	22,23	27,78	0,50	**PHP 3-3V280TB**
		74,93	B-1	1210	76,20	3,00	15,88	31,75	38,10	23,02	25,40	–	0,82	**PHP 3-3V300TB**
		78,74	B-1	1210	80,01	3,15	15,88	31,75	38,10	12,70	25,40	27,78	0,68	**PHP 3-3V315TB**
		83,82	B-1	1610	85,09	3,35	12,70	41,28	38,10	23,02	25,40	27,78	0,82	**PHP 3-3V335TB**
		91,44	B-1	1610	92,71	3,65	12,70	41,28	38,10	23,02	25,40	–	0,91	**PHP 3-3V365TB**
		103,38	B-1	1610	104,65	4,12	12,70	41,28	38,10	12,70	25,40	–	1,18	**PHP 3-3V412TB**
		113,03	B-1	1610	114,30	4,50	12,70	41,28	38,10	12,70	25,40	–	1,45	**PHP 3-3V450TB**
		119,38	B-1	1610	120,65	4,75	12,70	41,28	38,10	12,70	25,40	–	1,68	**PHP 3-3V475TB**
		125,73	B-1	1610	127,00	5,00	12,70	41,28	38,10	12,70	25,40	–	1,91	**PHP 3-3V500TB**
		133,35	B-1	1610	134,62	5,30	12,70	41,28	38,10	12,70	25,40	–	2,18	**PHP 3-3V530TB**
		140,97	B-1	1610	142,24	5,60	12,70	41,28	38,10	12,70	25,40	–	2,49	**PHP 3-3V560TB**
		151,13	B-1	2517[1]	152,40	6,00	19,05	63,50	38,10	3,97	44,45	10,32	3,36	**PHP 3-3V600TB**
		163,83	B-1	2517[1]	165,10	6,50	19,05	63,50	38,10	3,97	44,45	10,32	4,13	**PHP 3-3V650TB**
		173,99	B-1	2517[1]	175,26	6,90	19,05	63,50	38,10	3,97	44,45	10,32	4,54	**PHP 3-3V690TB**
		201,93	C-2	2517[1]	203,20	8,00	19,05	63,50	38,10	3,97	44,45	10,32	6,80	**PHP 3-3V800TB**

[1] Taper bushing needs to conform to coarse thread series (UNC) of the ASME/ANSI standard. To complete designation, add U before bushing number and bore size at the end of designation, e.g. PHF TBU3535X70MM.
[2] Mass does not include bushings.

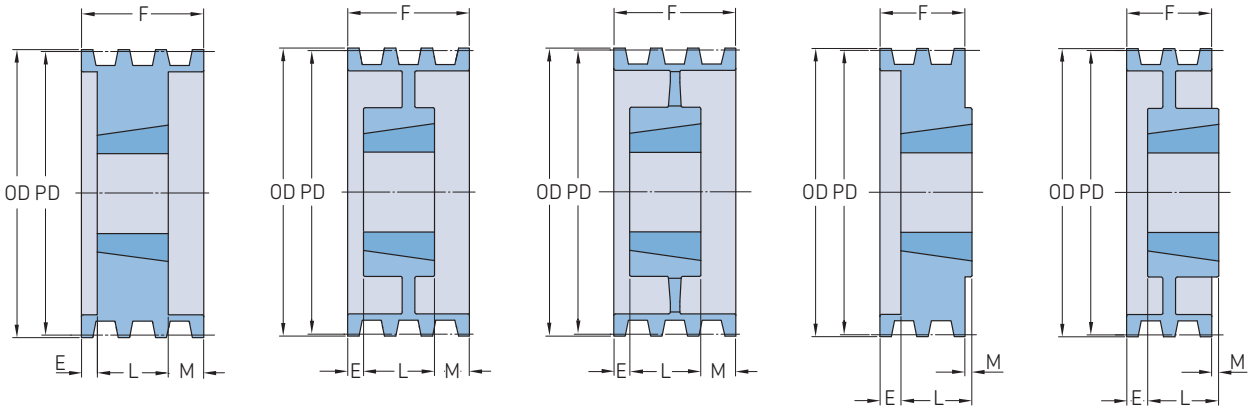

Type A-1 Type A-2 Type A-3 Type B-1 Type B-2

Section	Number of grooves	Pitch diameter PD	Pulley type	Bushing number	Dimensions Outer diameter OD		B Min.	B Max.	F	E	L	M	Mass[2]	Designation
–	–	mm	–	–	mm	in.							kg	–
3V	**3**	267,97	C-2	2517[1]	269,24	10,60	19,05	63,50	38,10	–	44,45	6,35	8,16	**PHP 3-3V1060TB**
		354,33	C-3	2517[1]	355,60	14,00	19,05	63,50	38,10	–	44,45	6,35	11,34	**PHP 3-3V1400TB**
		481,33	C-3	3020	482,60	19,00	31,75	76,20	38,10	–	50,80	12,70	15,42	**PHP 3-3V1900TB**
		633,73	C-3	3020	635,00	25,00	31,75	76,20	38,10	–	50,80	12,70	22,23	**PHP 3-3V2500TB**
		849,63	C-3	3020	850,90	33,50	31,75	76,20	38,10	6,35	50,80	6,35	30,39	**PHP 3-3V3350TB**
3V	**4**	69,85	B-1	1108	71,12	2,80	9,53	28,58	48,42	33,34	22,23	27,78	0,59	**PHP 4-3V280TB**
		74,93	B-1	1210	76,20	3,00	15,88	31,75	48,42	23,02	25,40	–	0,95	**PHP 4-3V300TB**
		78,74	B-1	1210	80,01	3,15	15,88	31,75	48,42	33,34	25,40	27,78	0,86	**PHP 4-3V315TB**
		83,82	B-1	1610	85,09	3,35	12,70	41,28	48,42	23,02	25,40	–	1,00	**PHP 4-3V335TB**
		91,44	B-1	1610	92,71	3,65	12,70	41,28	48,42	23,02	25,40	–	0,91	**PHP 4-3V365TB**
		103,38	B-1	1610	104,65	4,12	12,70	41,28	48,42	23,02	25,40	–	1,36	**PHP 4-3V412TB**
		113,03	B-1	1610	114,30	4,50	12,70	41,28	48,42	23,02	25,40	–	1,68	**PHP 4-3V450TB**
		119,38	B-1	1610	120,65	4,75	12,70	41,28	48,42	23,02	25,40	–	1,91	**PHP 4-3V475TB**
		125,73	B-1	1610	127,00	5,00	12,70	41,28	48,42	23,02	25,40	–	2,18	**PHP 4-3V500TB**
		133,35	B-1	1610	134,62	5,30	12,70	41,28	48,42	23,02	25,40	–	2,49	**PHP 4-3V530TB**
		140,97	B-1	1610	142,24	5,60	12,70	41,28	48,42	23,02	25,40	–	2,81	**PHP 4-3V560TB**
		151,13	B-1	2517[1]	152,40	6,00	19,05	63,50	48,42	3,97	44,45	–	3,63	**PHP 4-3V600TB**
		163,83	B-1	2517[1]	165,10	6,50	19,05	63,50	48,42	3,97	44,45	–	4,54	**PHP 4-3V650TB**
		173,99	B-1	2517[1]	175,26	6,90	19,05	63,50	48,42	3,97	44,45	–	5,44	**PHP 4-3V690TB**
		201,93	B-1	2517[1]	203,20	8,00	19,05	63,50	48,42	3,97	44,45	–	8,16	**PHP 4-3V800TB**
		267,97	A-2	2517[1]	269,24	10,60	19,05	63,50	48,42	3,97	44,45	–	9,07	**PHP 4-3V1060TB**
		354,33	C-3	2517[1]	355,60	14,00	19,05	63,50	48,42	–	44,45	3,97	13,15	**PHP 4-3V1400TB**
		481,33	C-3	3020	482,60	19,00	31,75	76,20	48,42	–	76,20	27,78	20,41	**PHP 4-3V1900TB**
		633,73	C-3	3020	635,00	25,00	31,75	76,20	48,42	–	76,20	27,78	28,58	**PHP 4-3V2500TB**
		849,63	C-3	3030	850,90	33,50	31,75	76,20	48,42	13,89	76,20	13,89	36,74	**PHP 4-3V3350TB**
3V	**5**	119,38	B-1	2517[1]	120,65	4,75	19,05	63,50	74,61	14,29	44,45	–	1,72	**PHP 5-3V475TB**
		125,73	B-1	2517[1]	127,00	5,00	19,05	63,50	74,61	14,29	44,45	–	2,18	**PHP 5-3V500TB**
		133,35	B-1	2517[1]	134,62	5,30	19,05	63,50	74,61	14,29	44,45	–	2,68	**PHP 5-3V530TB**
		140,97	B-1	2517[1]	142,24	5,60	19,05	63,50	74,61	14,29	44,45	–	3,18	**PHP 5-3V560TB**
		151,13	B-1	2517[1]	152,40	6,00	19,05	63,50	74,61	14,29	44,45	–	3,95	**PHP 5-3V600TB**
		163,83	B-1	2517[1]	165,10	6,50	19,05	63,50	74,61	14,29	44,45	–	4,99	**PHP 5-3V650TB**
		173,99	B-1	2517[1]	175,26	6,90	19,05	63,50	74,61	14,29	44,45	–	5,90	**PHP 5-3V690TB**
		201,93	B-1	2517[1]	203,20	8,00	19,05	63,50	74,61	14,29	44,45	–	8,62	**PHP 5-3V800TB**
		267,97	B-2	2517[1]	269,24	10,60	19,05	63,50	74,61	14,29	44,45	–	11,79	**PHP 5-3V1060TB**
		354,33	C-3	2517[1]	355,60	14,00	19,05	63,50	74,61	–	44,45	14,29	15,42	**PHP 5-3V1400TB**
		481,33	C-3	3030	482,60	19,00	31,75	76,20	74,61	–	76,20	17,46	21,32	**PHP 5-3V1900TB**
		633,73	C-3	3030	635,00	25,00	31,75	76,20	74,61	–	76,20	17,46	29,94	**PHP 5-3V2500TB**
		849,63	C-3	3030	850,90	33,50	31,75	76,20	74,61	8,73	76,20	17,46	39,01	**PHP 5-3V3350TB**
3V	**6**	119,38	B-1	2517[1]	120,65	4,75	19,05	63,50	69,06	24,61	44,45	–	2,00	**PHP 6-3V475TB**
		125,73	B-1	2517[1]	127,00	5,00	19,05	63,50	69,06	24,61	44,45	–	2,45	**PHP 6-3V500TB**
		133,35	B-1	2517[1]	134,62	5,30	19,05	63,50	69,06	24,61	44,45	–	2,95	**PHP 6-3V530TB**
		140,97	B-1	2517[1]	142,24	5,60	19,05	63,50	69,06	24,61	44,45	–	3,49	**PHP 6-3V560TB**
		151,13	B-1	2517[1]	152,40	6,00	19,05	63,50	69,06	24,61	44,45	–	4,31	**PHP 6-3V600TB**
		163,83	B-1	2517[1]	165,10	6,50	19,05	63,50	69,06	24,61	44,45	–	5,44	**PHP 6-3V650TB**
		173,99	B-1	2517[1]	175,26	6,90	19,05	63,50	69,06	24,61	44,45	–	5,90	**PHP 6-3V690TB**
		201,93	B-1	2517[1]	203,20	8,00	19,05	63,50	69,06	24,61	44,45	–	9,07	**PHP 6-3V800TB**
		267,97	B-2	2517[1]	269,24	10,60	19,05	63,50	69,06	24,61	44,45	–	13,15	**PHP 6-3V1060TB**
		354,33	B-3	2517[1]	355,60	14,00	19,05	63,50	69,06	5,56	44,45	19,05	18,60	**PHP 6-3V1400TB**
		481,33	C-3	3020	482,60	19,00	31,75	76,20	69,06	–	76,20	7,14	23,13	**PHP 6-3V1900TB**
		633,73	C-3	3030	635,00	25,00	31,75	76,20	69,06	–	76,20	7,14	32,66	**PHP 6-3V2500TB**
		849,63	C-3	3030	850,90	33,50	31,75	76,20	69,06	3,57	76,20	3,57	41,73	**PHP 6-3V3350TB**
3V	**8**	119,38	B-1	2517[1]	120,65	4,75	19,05	63,50	89,69	45,24	44,45	–	2,63	**PHP 8-3V475TB**
		125,73	B-1	2517[1]	127,00	5,00	19,05	63,50	89,69	45,24	44,45	–	2,90	**PHP 8-3V500TB**

[1] Taper bushing needs to conform to coarse thread series (UNC) of the ASME/ANSI standard. To complete designation, add U before bushing number and bore size at the end of designation, e.g. PHF TBU3535X70MM.
[2] Mass does not include bushings.

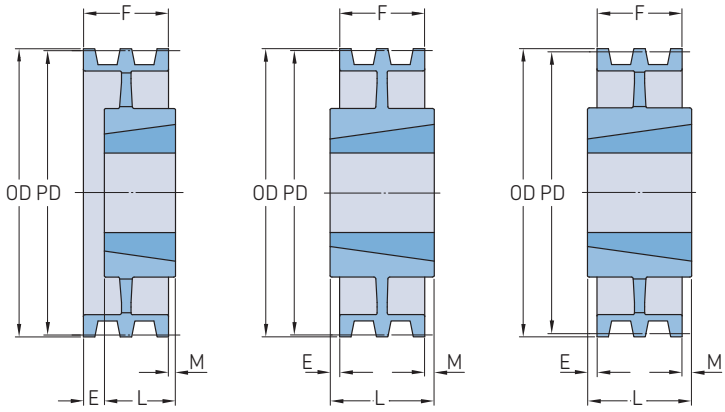

Section	Number of grooves	Pitch diameter PD	Pulley type	Bushing number	Dimensions Outer diameter OD		B Min.	B Max.	F	E	L	M	Mass[2]	Designation
–	–	mm	–	–	mm	in.							kg	–
3V	**8**	133,35	A-1	2517[1]	134,62	5,30	19,05	63,50	89,69	26,19	44,45	19,05	3,54	**PHP 8-3V530TB**
		140,97	A-1	2517[1]	142,24	5,60	19,05	63,50	89,69	6,35	44,45	38,89	4,17	**PHP 8-3V560TB**
		151,13	A-1	2517[1]	152,40	6,00	19,05	63,50	89,69	6,35	44,45	38,89	4,99	**PHP 8-3V600TB**
		163,83	A-1	2517[1]	165,10	6,50	19,05	63,50	89,69	6,35	44,45	38,89	6,35	**PHP 8-3V650TB**
		173,99	A-1	2517[1]	175,26	6,90	19,05	63,50	89,69	6,35	44,45	38,89	7,26	**PHP 8-3V690TB**
		201,93	A-1	3020	203,20	8,00	31,75	76,20	89,69	12,70	50,80	26,19	9,98	**PHP 8-3V800TB**
		267,97	A-2	3020	269,24	10,60	31,75	76,20	89,69	12,70	50,80	26,19	12,70	**PHP 8-3V1060TB**
		354,33	A-3	3020	355,60	14,00	31,75	76,20	89,69	–	76,20	13,49	23,59	**PHP 8-3V1400TB**
		481,33	A-3	3535[1]	482,60	19,00	50,80	100,01	89,69	–	88,90	0,79	30,39	**PHP 8-3V1900TB**
		633,73	A-3	3535[1]	635,00	25,00	50,80	100,01	89,69	–	88,90	0,79	42,18	**PHP 8-3V2500TB**
		849,63	C-3	4040	850,90	33,50	44,45	112,71	89,69	23,81	101,60	23,81	71,21	**PHP 8-3V3350TB**
3V	**10**	119,38	B-1	2517[1]	120,65	4,75	19,05	63,50	110,33	65,88	44,45	–	3,18	**PHP 10-3V475TB**
		125,73	B-1	2517[1]	127,00	5,00	19,05	63,50	110,33	65,88	44,45	19,05	3,63	**PHP 10-3V500TB**
		133,35	A-1	2517[1]	134,62	5,30	19,05	63,50	110,33	65,88	44,45	–	4,08	**PHP 10-3V530TB**
		140,97	A-1	2517[1]	142,24	5,60	19,05	63,50	110,33	12,70	44,45	53,18	4,99	**PHP 10-3V560TB**
		151,13	A-1	2517[1]	152,40	6,00	19,05	63,50	110,33	12,70	44,45	53,18	5,90	**PHP 10-3V600TB**
		163,83	A-1	2517[1]	165,10	6,50	19,05	63,50	110,33	12,70	44,45	53,18	6,80	**PHP 10-3V650TB**
		173,99	A-1	2517[1]	175,26	6,90	19,05	63,50	110,33	12,70	44,45	53,18	8,16	**PHP 10-3V690TB**
		201,93	A-1	3020	203,20	8,00	31,75	76,20	110,33	6,35	50,80	53,18	10,43	**PHP 10-3V800TB**
		267,97	A-2	3020	269,24	10,60	31,75	76,20	110,33	21,43	50,80	38,10	14,06	**PHP 10-3V1060TB**
		354,33	A-2	3535[1]	355,60	14,00	50,80	88,90	110,33	–	88,90	21,43	22,68	**PHP 10-3V1400TB**
		481,33	A-3	3535[1]	482,60	19,00	50,80	88,90	110,33	–	88,90	21,43	34,02	**PHP 10-3V1900TB**
		633,73	A-3	4040	635,00	25,00	44,45	112,71	110,33	–	101,60	8,73	55,34	**PHP 10-3V2500TB**
		849,63	A-3	4040	850,90	33,50	44,45	112,71	110,33	4,37	101,60	4,37	78,02	**PHP 10-3V3350TB**
5V	**2**	177,80	B-1	2517[1]	180,34	7,10	19,05	63,50	42,86	1,59	44,45	–	4,54	**PHP 2-5V710TB**
		187,96	B-1	2517[1]	190,50	7,50	19,05	63,50	42,86	1,59	44,45	–	5,44	**PHP 2-5V750TB**
		200,66	B-1	2517[1]	203,20	8,00	19,05	63,50	42,86	1,59	44,45	–	6,35	**PHP 2-5V800TB**
		213,36	B-2	2517[1]	215,90	8,50	19,05	63,50	42,86	1,59	44,45	–	5,90	**PHP 2-5V850TB**
		226,06	B-2	2517[1]	228,60	9,00	19,05	63,50	42,86	1,59	44,45	–	7,26	**PHP 2-5V900TB**
		232,41	C-2	3020	234,95	9,25	31,75	76,20	42,86	–	50,80	7,94	7,71	**PHP 2-5V925TB**
		245,11	C-2	3020	247,65	9,75	31,75	76,20	42,86	–	50,80	7,94	8,62	**PHP 2-5V975TB**
		259,08	C-2	3020	261,62	10,30	31,75	76,20	42,86	–	50,80	7,94	9,98	**PHP 2-5V1030TB**
		274,32	C-2	3020	276,86	10,90	31,75	76,20	42,86	–	50,80	7,94	10,89	**PHP 2-5V1090TB**
		297,18	C-2	3020	299,72	11,80	31,75	76,20	42,86	–	50,80	7,94	11,79	**PHP 2-5V1180TB**
		314,96	C-2	3020	317,50	12,50	31,75	76,20	42,86	–	50,80	7,94	12,70	**PHP 2-5V1250TB**
		332,74	C-3	3020	335,28	13,20	31,75	76,20	42,86	–	50,80	7,94	9,53	**PHP 2-5V1320TB**
		353,06	C-3	3020	355,60	14,00	31,75	76,20	42,86	–	50,80	7,94	10,43	**PHP 2-5V1400TB**
		378,46	C-3	3020	381,00	15,00	31,75	76,20	42,86	–	50,80	7,94	11,79	**PHP 2-5V1500TB**
		403,86	C-3	3020	406,40	16,00	31,75	76,20	42,86	–	50,80	7,94	12,70	**PHP 2-5V1600TB**
		535,94	C-3	3535[1]	538,48	21,20	50,80	100,01	42,86	9,53	88,90	36,51	23,13	**PHP 2-5V2120TB**
		708,66	C-3	3535[1]	711,20	28,00	50,80	100,01	42,86	9,53	88,90	36,51	31,30	**PHP 2-5V2800TB**
5V	**3**	177,80	B-1	2517[1]	180,34	7,10	19,05	63,50	60,33	15,88	44,45	–	5,90	**PHP 3-5V710TB**
		187,96	B-1	2517[1]	190,50	7,50	19,05	63,50	60,33	15,88	44,45	–	6,80	**PHP 3-5V750TB**
		200,66	B-1	2517[1]	203,20	8,00	19,05	63,50	60,33	15,88	44,45	–	8,16	**PHP 3-5V800TB**
		213,36	B-2	2517[1]	215,90	8,50	19,05	63,50	60,33	15,88	44,45	–	9,07	**PHP 3-5V850TB**
		226,06	B-2	2517[1]	228,60	9,00	19,05	63,50	60,33	15,88	44,45	–	9,07	**PHP 3-5V900TB**
		232,41	A-2	3020	234,95	9,25	31,75	76,20	60,33	–	50,80	9,53	9,53	**PHP 3-5V925TB**
		245,11	A-2	3020	247,65	9,75	31,75	76,20	60,33	–	50,80	9,53	10,89	**PHP 3-5V975TB**
		259,08	A-2	3020	261,62	10,30	31,75	76,20	60,33	–	50,80	9,53	11,34	**PHP 3-5V1030TB**
		274,32	A-2	3020	276,86	10,90	31,75	76,20	60,33	–	50,80	9,53	12,25	**PHP 3-5V1090TB**
		297,18	A-2	3020	299,72	11,80	31,75	76,20	60,33	–	50,80	9,53	13,15	**PHP 3-5V1180TB**
		314,96	A-3	3020	317,50	12,50	31,75	76,20	60,33	–	50,80	9,53	14,51	**PHP 3-5V1250TB**

[1] Taper bushing needs to conform to coarse thread series (UNC) of the ASME/ANSI standard. To complete designation, add U before bushing number and bore size at the end of designation, e.g. PHF TBU3535X70MM.
[2] Mass does not include bushings.

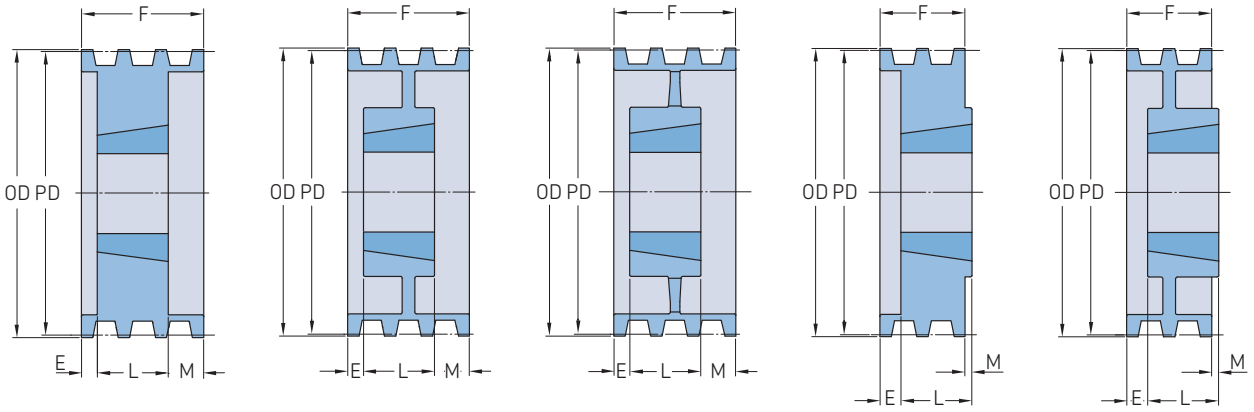

Type A-1 Type A-2 Type A-3 Type B-1 Type B-2

Section	Number of grooves	Pitch diameter PD	Pulley type	Bushing number	Dimensions Outer diameter OD		B Min.	B Max.	F	E	L	M	Mass[2]	Designation
–	–	mm	–	–	mm	in.							kg	–
5V	**3**	332,74	A-3	3020	335,28	13,20	31,75	76,20	60,33	–	50,80	9,53	15,42	**PHP 3-5V1320TB**
		353,06	A-3	3020	355,60	14,00	31,75	76,20	60,33	–	50,80	9,53	16,33	**PHP 3-5V1400TB**
		378,46	A-3	3020	381,00	15,00	31,75	76,20	60,33	–	50,80	9,53	16,78	**PHP 3-5V1500TB**
		403,86	A-3	3020	406,40	16,00	31,75	76,20	60,33	–	50,80	9,53	17,24	**PHP 3-5V1600TB**
		535,94	C-3	3535[1]	538,48	21,20	50,80	100,01	60,33	–	88,90	28,58	29,48	**PHP 3-5V2120TB**
		708,66	C-3	3535[1]	711,20	28,00	50,80	100,01	60,33	–	88,90	28,58	42,18	**PHP 3-5V2800TB**
		949,96	C-3	4040	952,50	37,50	44,45	112,71	60,33	12,70	101,60	28,58	64,41	**PHP 3-5V3750TB**
		1267,46	C-3	4040	1270,00	50,00	44,45	112,71	60,33	12,70	101,60	28,58	91,63	**PHP 3-5V5000TB**
5V	**4**	177,80	B-1	2517[1]	180,34	7,10	19,05	63,50	77,79	33,34	44,45	–	6,80	**PHP 4-5V710TB**
		187,96	B-1	2517[1]	190,50	7,50	19,05	63,50	77,79	33,34	44,45	–	8,16	**PHP 4-5V750TB**
		200,66	B-1	2517[1]	203,20	8,00	19,05	63,50	77,79	33,34	44,45	–	9,53	**PHP 4-5V800TB**
		213,36	B-2	2517[1]	215,90	8,50	19,05	63,50	77,79	33,34	44,45	–	9,07	**PHP 4-5V850TB**
		226,06	B-2	2517[1]	228,60	9,00	19,05	63,50	77,79	33,34	44,45	–	9,98	**PHP 4-5V900TB**
		232,41	A-1	3020	234,95	9,25	31,75	76,20	77,79	12,70	50,80	14,29	12,25	**PHP 4-5V925TB**
		245,11	A-1	3020	247,65	9,75	31,75	76,20	77,79	12,70	50,80	14,29	14,06	**PHP 4-5V975TB**
		259,08	A-2	3020	261,62	10,30	31,75	76,20	77,79	12,70	50,80	14,29	12,70	**PHP 4-5V1030TB**
		274,32	A-2	3020	276,86	10,90	31,75	76,20	77,79	12,70	50,80	14,29	14,06	**PHP 4-5V1090TB**
		297,18	A-2	3020	299,72	11,80	31,75	76,20	77,79	12,70	50,80	14,29	15,42	**PHP 4-5V1180TB**
		314,96	A-2	3020	317,50	12,50	31,75	76,20	77,79	–	76,20	1,59	18,14	**PHP 4-5V1250TB**
		332,74	A-3	3020	335,28	13,20	31,75	76,20	77,79	–	76,20	1,59	19,05	**PHP 4-5V1320TB**
		353,06	C-2	3535[1]	355,60	14,00	50,80	100,01	77,79	–	88,90	11,11	21,77	**PHP 4-5V1400TB**
		378,46	C-3	3535[1]	381,00	15,00	50,80	100,01	77,79	–	88,90	11,11	23,59	**PHP 4-5V1500TB**
		403,86	C-3	3535[1]	406,40	16,00	50,80	100,01	77,79	–	88,90	11,11	24,04	**PHP 4-5V1600TB**
		535,94	C-3	3535[1]	538,48	21,20	50,80	100,01	77,79	–	88,90	11,11	32,66	**PHP 4-5V2120TB**
		708,66	C-3	3535[1]	711,20	28,00	50,80	100,01	77,79	–	88,90	11,11	46,72	**PHP 4-5V2800TB**
		949,96	C-3	4040	952,50	37,50	44,45	112,71	77,79	–	101,60	23,81	78,02	**PHP 4-5V3750TB**
		1267,46	C-3	4040	1270,00	50,00	44,45	112,71	77,79	–	101,60	23,81	100,70	**PHP 4-5V5000TB**
5V	**5**	177,80	A-1	3020	180,34	7,10	31,75	76,20	95,25	12,70	50,80	31,75	7,26	**PHP 5-5V710TB**
		187,96	A-1	3020	190,50	7,50	31,75	76,20	95,25	12,70	50,80	31,75	8,16	**PHP 5-5V750TB**
		200,66	A-1	3020	203,20	8,00	31,75	76,20	95,25	12,70	50,80	31,75	9,98	**PHP 5-5V800TB**
		213,36	A-1	3020	215,90	8,50	31,75	76,20	95,25	12,70	50,80	31,75	11,79	**PHP 5-5V850TB**
		226,06	A-1	3020	228,60	9,00	31,75	76,20	95,25	12,70	50,80	31,75	13,15	**PHP 5-5V900TB**
		232,41	A-1	3020	234,95	9,25	31,75	76,20	95,25	12,70	50,80	31,75	13,61	**PHP 5-5V925TB**
		245,11	A-1	3020	247,65	9,75	31,75	76,20	95,25	12,70	50,80	31,75	15,42	**PHP 5-5V975TB**
		259,08	A-2	3020	261,62	10,30	31,75	76,20	95,25	12,70	50,80	31,75	14,51	**PHP 5-5V1030TB**
		274,32	A-2	3020	276,86	10,90	31,75	76,20	95,25	12,70	50,80	31,75	15,42	**PHP 5-5V1090TB**
		297,18	A-2	3020	299,72	11,80	31,75	76,20	95,25	12,70	50,80	31,75	17,69	**PHP 5-5V1180TB**
		314,96	A-2	3535[1]	317,50	12,50	50,80	100,01	95,25	–	88,90	6,35	24,49	**PHP 5-5V1250TB**
		332,74	A-2	3535[1]	335,28	13,20	50,80	100,01	95,25	–	88,90	6,35	25,85	**PHP 5-5V1320TB**
		353,06	A-2	3535[1]	355,60	14,00	50,80	100,01	95,25	–	88,90	6,35	24,49	**PHP 5-5V1400TB**
		378,46	A-3	3535[1]	381,00	15,00	50,80	100,01	95,25	–	88,90	6,35	25,40	**PHP 5-5V1500TB**
		403,86	A-3	3535[1]	406,40	16,00	50,80	100,01	95,25	–	88,90	6,35	26,31	**PHP 5-5V1600TB**
		535,94	C-3	4040	538,48	21,20	44,45	112,71	95,25	–	101,60	6,35	41,73	**PHP 5-5V2120TB**
		708,66	C-3	4040	711,20	28,00	44,45	112,71	95,25	–	101,60	6,35	53,07	**PHP 5-5V2800TB**
		949,96	C-3	4040	952,50	37,50	44,45	112,71	95,25	–	101,60	6,35	82,55	**PHP 5-5V3750TB**
		1267,46	C-3	4545	1270,00	50,00	57,15	125,41	95,25	–	114,30	19,05	125,19	**PHP 5-5V5000TB**
5V	**6**	177,80	A-1	3020	180,34	7,10	31,75	76,20	112,71	19,05	50,80	42,86	8,16	**PHP 6-5V710 TB**
		187,96	A-1	3020	190,50	7,50	31,75	76,20	112,71	19,05	50,80	42,86	9,07	**PHP 6-5V750 TB**
		200,66	A-1	3020	203,20	8,00	31,75	76,20	112,71	19,05	50,80	42,86	10,89	**PHP 6-5V800 TB**
		213,36	A-1	3020	215,90	8,50	31,75	76,20	112,71	19,05	50,80	42,86	12,70	**PHP 6-5V850 TB**
		226,06	A-1	3020	228,60	9,00	31,75	76,20	112,71	19,05	50,80	42,86	13,61	**PHP 6-5V900 TB**
		232,41	A-1	3535[1]	234,95	9,25	50,80	100,01	112,71	–	88,90	23,81	17,69	**PHP 6-5V925 TB**
		245,11	A-1	3535[1]	247,65	9,75	50,80	100,01	112,71	–	88,90	23,81	20,87	**PHP 6-5V975 TB**

[1] Taper bushing needs to conform to coarse thread series (UNC) of the ASME/ANSI standard. To complete designation, add U before bushing number and bore size at the end of designation, e.g. PHF TBU3535X70MM.
[2] Mass does not include bushings.

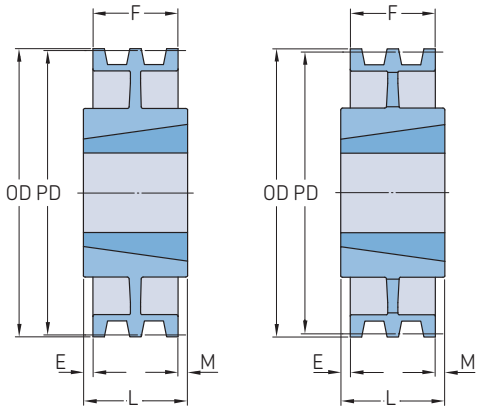

Section	Number of grooves	Pitch diameter PD	Pulley type	Bushing number	Dimensions Outer diameter OD		B Min.	B Max.	F	E	L	M	Mass[2]	Designation
–	–	mm	–	–	mm	in.							kg	–
5V	**6**	259,08	A-1	3535[1]	261,62	10,30	50,80	100,01	112,71	–	88,90	23,81	24,49	**PHP 6-5V1030 TB**
		274,32	A-1	3535[1]	276,86	10,90	50,80	100,01	112,71	–	88,90	23,81	28,12	**PHP 6-5V1090 TB**
		297,18	A-2	3535[1]	299,72	11,80	50,80	100,01	112,71	–	88,90	23,81	24,95	**PHP 6-5V1180 TB**
		314,96	A-2	3535[1]	317,50	12,50	50,80	100,01	112,71	–	88,90	23,81	26,31	**PHP 6-5V1250 TB**
		332,74	A-2	3535[1]	335,28	13,20	50,80	100,01	112,71	–	88,90	23,81	27,22	**PHP 6-5V1320 TB**
		353,06	A-2	3535[1]	355,60	14,00	50,80	100,01	112,71	–	88,90	23,81	26,76	**PHP 6-5V1400 TB**
		378,46	A-2	4040	381,00	15,00	44,45	112,71	112,71	–	101,60	11,11	37,19	**PHP 6-5V1500 TB**
		403,86	A-2	4040	406,40	16,00	44,45	112,71	112,71	–	101,60	11,11	39,46	**PHP 6-5V1600 TB**
		535,94	A-3	4040	538,48	21,20	44,45	112,71	112,71	–	101,60	11,11	46,27	**PHP 6-5V2120 TB**
		708,66	A-3	4040	711,20	28,00	44,45	112,71	112,71	–	101,60	11,11	62,14	**PHP 6-5V2800 TB**
		949,96	C-3	4545	952,50	37,50	57,15	125,41	112,71	–	114,30	1,59	100,24	**PHP 6-5V3750 TB**
		1267,46	C-3	4545	1270,00	50,00	57,15	125,41	112,71	–	114,30	1,59	134,26	**PHP 6-5V5000 TB**
5V	**8**	177,80	A-1	3030	180,34	7,10	31,75	76,20	147,64	25,40	76,20	46,04	10,89	**PHP 8-5V710TB**
		187,96	A-1	3030	190,50	7,50	31,75	76,20	147,64	25,40	76,20	46,04	12,70	**PHP 8-5V750TB**
		200,66	A-1	3030	203,20	8,00	31,75	76,20	147,64	25,40	76,20	46,04	14,97	**PHP 8-5V800TB**
		213,36	A-1	3030	215,90	8,50	31,75	76,20	147,64	25,40	76,20	46,04	17,24	**PHP 8-5V850TB**
		226,06	A-1	3535[1]	228,60	9,00	50,80	100,01	147,64	25,40	88,90	33,34	19,96	**PHP 8-5V900TB**
		232,41	A-1	3535[1]	234,95	9,25	50,80	100,01	147,64	25,40	88,90	33,34	20,41	**PHP 8-5V925TB**
		245,11	A-1	3535[1]	247,65	9,75	50,80	100,01	147,64	25,40	88,90	33,34	23,13	**PHP 8-5V975TB**
		259,08	A-1	3535[1]	261,62	10,30	50,80	100,01	147,64	25,40	88,90	33,34	27,22	**PHP 8-5V1030TB**
		274,32	A-1	3535[1]	276,86	10,90	50,80	100,01	147,64	25,40	88,90	33,34	30,84	**PHP 8-5V1090TB**
		297,18	A-2	3535[1]	299,72	11,80	50,80	100,01	147,64	25,40	88,90	33,34	28,58	**PHP 8-5V1180TB**
		314,96	A-2	4040	317,50	12,50	44,45	112,71	147,64	6,35	101,60	39,69	37,19	**PHP 8-5V1250TB**
		332,74	A-2	4040	335,28	13,20	44,45	112,71	147,64	6,35	101,60	39,69	37,19	**PHP 8-5V1320TB**
		353,06	A-2	4040	355,60	14,00	44,45	112,71	147,64	6,35	101,60	39,69	39,46	**PHP 8-5V1400TB**
		378,46	A-2	4040	381,00	15,00	44,45	112,71	147,64	6,35	101,60	39,69	44,00	**PHP 8-5V1500TB**
		403,86	A-2	4040	406,40	16,00	44,45	112,71	147,64	6,35	101,60	39,69	46,27	**PHP 8-5V1600TB**
		535,94	A-3	4040	538,48	21,20	44,45	112,71	147,64	6,35	101,60	39,69	55,34	**PHP 8-5V2120TB**
		708,66	A-3	4545	711,20	28,00	57,15	125,41	147,64	6,35	114,30	26,99	79,83	**PHP 8-5V2800TB**
		949,96	A-3	4545	952,50	37,50	57,15	125,41	147,64	6,35	114,30	26,99	122,92	**PHP 8-5V3750TB**
		1267,46	A-3	4545	1270,00	50,00	57,15	125,41	147,64	6,35	114,30	26,99	161,48	**PHP 8-5V5000TB**
5V	**10**	200,66	A-1	3030	203,20	8,00	31,75	76,20	182,56	25,40	76,20	80,96	16,33	**PHP 10-5V800TB**
		213,36	A-1	3030	215,90	8,50	31,75	76,20	182,56	25,40	76,20	80,96	19,05	**PHP 10-5V850TB**
		226,06	A-1	3535[1]	228,60	9,00	50,80	100,01	182,56	25,40	88,90	68,26	21,32	**PHP 10-5V900TB**
		232,41	A-1	4040	234,95	9,25	44,45	112,71	182,56	25,40	101,60	55,03	20,87	**PHP 10-5V925TB**
		245,11	A-1	4040	247,65	9,75	44,45	112,71	182,56	25,40	101,60	55,03	24,49	**PHP 10-5V975TB**
		259,08	A-1	4040	261,62	10,30	44,45	112,71	182,56	25,40	101,60	55,03	29,03	**PHP 10-5V1030TB**
		274,32	A-1	4040	276,86	10,90	44,45	112,71	182,56	25,40	101,60	55,03	33,11	**PHP 10-5V1090TB**
		284,48	A-1	4040	287,02	11,30	44,45	112,71	182,56	25,40	101,60	55,03	41,73	**PHP 10-5V1130TB**
		297,18	A-1	4040	299,72	11,80	44,45	112,71	182,56	25,40	101,60	55,03	39,46	**PHP 10-5V1180TB**
		314,96	A-2	4040	317,50	12,50	44,45	112,71	182,56	19,05	101,60	55,03	39,46	**PHP 10-5V1250TB**
		332,74	A-2	4040	335,28	13,20	44,45	112,71	182,56	19,05	101,60	61,91	48,08	**PHP 10-5V1320TB**
		353,06	A-2	4545	355,60	14,00	57,15	112,71	182,56	19,05	114,30	61,91	52,62	**PHP 10-5V1400TB**
		378,46	A-2	4545	381,00	15,00	57,15	125,41	182,56	19,05	114,30	49,21	57,15	**PHP 10-5V1500TB**
		403,86	A-2	4545	406,40	16,00	57,15	125,41	182,56	19,05	114,30	49,21	59,42	**PHP 10-5V1600TB**
		472,44	A-2	4545	474,98	18,70	57,15	125,41	182,56	19,05	114,30	49,21	61,69	**PHP 10-5V1870TB**
		535,94	A-3	4545	538,48	21,20	57,15	125,41	182,56	19,05	114,30	49,21	63,05	**PHP 10-5V2120TB**
		708,66	A-3	4545	711,20	28,00	57,15	125,41	182,56	19,05	114,30	49,21	86,64	**PHP 10-5V2800TB**
		949,96	A-3	4545	952,50	37,50	57,15	125,41	182,56	19,05	114,30	49,21	143,34	**PHP 10-5V3750TB**
		1267,46	A-3	5050	1270,00	50,00	69,85	127,00	182,56	19,05	127,00	36,51	194,14	**PHP 10-5V5000TB**
8V	**4**	312,42	A-1	4040	317,50	12,50	44,45	112,71	123,83	–	101,60	22,23	41,73	**PHP 4-8V1250TB**
		330,20	A-1	4040	335,28	13,20	44,45	112,71	123,83	–	101,60	22,23	48,53	**PHP 4-8V1320TB**
		350,52	A-1	4040	355,60	14,00	44,45	125,41	123,83	–	114,30	9,53	57,15	**PHP 4-8V1400TB**

[1] Taper bushing needs to conform to coarse thread series (UNC) of the ASME/ANSI standard. To complete designation, add U before bushing number and bore size at the end of designation, e.g. PHF TBU3535X70MM.
[2] Mass does not include bushings.

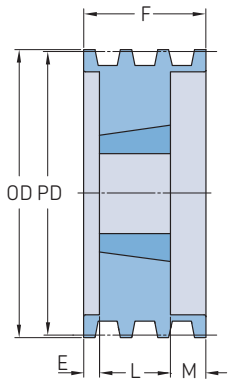

Type A-1

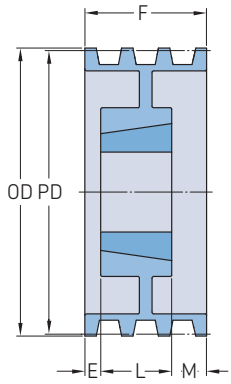

Type A-2

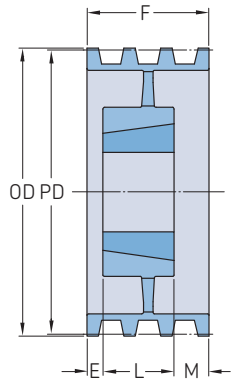

Type A-3

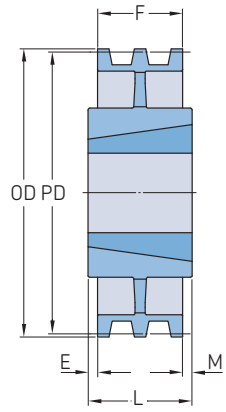

Type C-3

Section	Number of grooves	Pitch diameter PD	Pulley type	Bushing number	Dimensions Outer diameter OD		B Min.	B Max.	F	E	L	M	Mass*	Designation
–	–	mm	–	–	mm	in.							kg	–
8V	**4**	375,92	A-1	4040	381,00	15,00	44,45	125,41	123,83	–	114,30	9,53	52,62	**PHP 4-8V1500TB**
		401,32	A-2	4040	406,40	16,00	44,45	125,41	123,83	–	114,30	9,53	57,15	**PHP 4-8V1600TB**
		426,72	A-2	4040	431,80	17,00	44,45	125,41	123,83	–	114,30	9,53	61,69	**PHP 4-8V1700TB**
		452,12	A-2	4040	457,20	18,00	44,45	125,41	123,83	–	114,30	9,53	66,22	**PHP 4-8V1800TB**
		477,52	A-2	4040	482,60	19,00	44,45	125,41	123,83	–	114,30	9,53	73,03	**PHP 4-8V1900TB**
		502,92	A-2	4545	508,00	20,00	57,15	125,41	123,83	–	114,30	9,53	77,56	**PHP 4-8V2000TB**
		533,40	A-3	4545	538,48	21,20	57,15	125,41	123,83	–	114,30	9,53	66,22	**PHP 4-8V2120TB**
		563,88	A-3	4545	568,96	22,40	57,15	125,41	123,83	–	114,30	9,53	73,03	**PHP 4-8V2240TB**
		756,92	A-3	4545	762,00	30,00	57,15	125,41	123,83	–	114,30	9,53	113,85	**PHP 4-8V3000TB**
		896,62	A-3	4545	901,70	35,50	57,15	125,41	123,83	–	114,30	9,53	129,27	**PHP 4-8V3550TB**
		1010,92	C-3	5050	1016,00	40,00	69,85	127,00	123,83	–	127,00	3,18	143,34	**PHP 4-8V4000TB**
		1125,22	C-3	5050	1130,30	44,50	69,85	127,00	123,83	–	127,00	3,18	185,07	**PHP 4-8V4450TB**
		1341,12	C-3	5050	1346,20	53,00	69,85	127,00	123,83	–	127,00	3,18	215,91	**PHP 4-8V5300TB**
8V	**5**	312,42	A-1	4040	317,50	12,50	44,45	125,41	152,40	–	114,30	38,10	43,54	**PHP 5-8V1250TB**
		330,20	A-1	4040	335,28	13,20	44,45	125,41	152,40	–	114,30	38,10	52,62	**PHP 5-8V1320TB**
		350,52	A-1	4040	355,60	14,00	44,45	125,41	152,40	–	114,30	38,10	61,69	**PHP 5-8V1400TB**
		375,92	A-1	4040	381,00	15,00	44,45	125,41	152,40	–	114,30	38,10	59,42	**PHP 5-8V1500TB**
		401,32	A-1	4040	406,40	16,00	44,45	125,41	152,40	–	114,30	38,10	63,96	**PHP 5-8V1600TB**
		426,72	A-2	4040	431,80	17,00	44,45	125,41	152,40	–	114,30	38,10	66,22	**PHP 5-8V1700TB**
		452,12	A-2	4040	457,20	18,00	44,45	125,41	152,40	–	114,30	38,10	70,76	**PHP 5-8V1800TB**
		477,52	A-2	4040	482,60	19,00	44,45	125,41	152,40	–	114,30	38,10	79,83	**PHP 5-8V1900TB**
		502,92	A-2	4545	508,00	20,00	57,15	125,41	152,40	–	114,30	38,10	84,37	**PHP 5-8V2000TB**
		533,40	A-3	4545	538,48	21,20	57,15	125,41	152,40	–	114,30	38,10	73,03	**PHP 5-8V2120TB**
		563,88	A-3	4545	568,96	22,40	57,15	125,41	152,40	–	114,30	38,10	79,83	**PHP 5-8V2240TB**
		624,84	A-3	4545	629,92	24,80	57,15	125,41	152,40	–	114,30	38,10	106,59	**PHP 5-8V2480TB**
		756,92	A-3	4545	762,00	30,00	57,15	125,41	152,40	–	114,30	38,10	122,92	**PHP 5-8V3000TB**
		896,62	A-3	4545	901,70	35,50	57,15	125,41	152,40	–	114,30	38,10	147,42	**PHP 5-8V3550TB**
		1010,92	A-3	5050	1016,00	40,00	69,85	127,00	152,40	–	127,00	25,40	158,76	**PHP 5-8V4000TB**
		1125,22	A-3	5050	1130,30	44,50	69,85	127,00	152,40	–	127,00	25,40	186,43	**PHP 5-8V4450TB**
		1341,12	A-3	5050	1346,20	53,00	69,85	127,00	152,40	–	127,00	25,40	256,28	**PHP 5-8V5300TB**
8V	**6**	312,42	A-1	4545	317,50	12,50	57,15	125,41	155,58	12,70	114,30	53,98	47,63	**PHP 6-8V1250TB**
		330,20	A-1	4545	335,28	13,20	57,15	125,41	155,58	12,70	114,30	53,98	56,70	**PHP 6-8V1320TB**
		350,52	A-1	4545	355,60	14,00	57,15	125,41	155,58	12,70	114,30	53,98	65,77	**PHP 6-8V1400TB**
		375,92	A-1	4545	381,00	15,00	57,15	125,41	155,58	12,70	114,30	53,98	77,11	**PHP 6-8V1500TB**
		401,32	A-2	4545	406,40	16,00	57,15	125,41	155,58	12,70	114,30	53,98	65,77	**PHP 6-8V1600TB**
		426,72	A-2	4545	431,80	17,00	57,15	125,41	155,58	12,70	114,30	53,98	68,04	**PHP 6-8V1700TB**
		452,12	A-2	4545	457,20	18,00	57,15	125,41	155,58	12,70	114,30	53,98	72,57	**PHP 6-8V1800TB**
		477,52	A-2	4545	482,60	19,00	57,15	125,41	155,58	12,70	114,30	53,98	83,91	**PHP 6-8V1900TB**
		502,92	A-2	4545	508,00	20,00	57,15	125,41	155,58	12,70	114,30	53,98	90,72	**PHP 6-8V2000TB**
		533,40	A-3	4545	538,48	21,20	57,15	125,41	155,58	12,70	114,30	53,98	77,11	**PHP 6-8V2120TB**
		563,88	A-3	4545	568,96	22,40	57,15	125,41	155,58	12,70	114,30	53,98	81,65	**PHP 6-8V2240TB**
		624,84	A-3	4545	629,92	24,80	57,15	125,41	155,58	12,70	114,30	53,98	107,95	**PHP 6-8V2480TB**
		756,92	A-3	5050	762,00	30,00	69,85	127,00	155,58	12,70	127,00	41,28	129,27	**PHP 6-8V3000TB**
		896,62	A-3	5050	901,70	35,50	69,85	127,00	155,58	12,70	127,00	41,28	152,41	**PHP 6-8V3550TB**
		1010,92	A-3	5050	1016,00	40,00	69,85	127,00	155,58	12,70	127,00	41,28	170,10	**PHP 6-8V4000TB**
		1125,22	A-3	5050	1130,30	44,50	69,85	127,00	155,58	12,70	127,00	41,28	197,77	**PHP 6-8V4450TB**
		1341,12	A-3	5050	1346,20	53,00	69,85	127,00	155,58	12,70	127,00	41,28	269,89	**PHP 6-8V5300TB**
8V	**8**	312,42	A-1	4545	317,50	12,50	57,15	125,41	238,13	38,10	114,30	85,73	56,70	**PHP 8-8V1250TB**
		330,20	A-1	4545	335,28	13,20	57,15	125,41	238,13	38,10	114,30	85,73	61,23	**PHP 8-8V1320TB**
		350,52	A-1	4545	355,60	14,00	57,15	125,41	238,13	38,10	114,30	85,73	70,31	**PHP 8-8V1400TB**
		375,92	A-1	4545	381,00	15,00	57,15	125,41	238,13	38,10	114,30	85,73	81,65	**PHP 8-8V1500TB**
		401,32	A-1	4545	406,40	16,00	57,15	125,41	238,13	38,10	114,30	85,73	72,57	**PHP 8-8V1600TB**

* Mass does not include bushings.

Section	Number of grooves	Pitch diameter PD	Pulley type	Bushing number	Dimensions Outer diameter OD		B Min.	B Max.	F	E	L	M	Mass*	Designation
–	–	mm	–	–	mm	in.							kg	–
8V	**8**	426,72	A-2	5050	431,80	17,00	69,85	127,00	238,13	38,10	127,00	85,73	79,83	**PHP 8-8V1700TB**
		452,12	A-2	5050	457,20	18,00	69,85	127,00	238,13	25,40	127,00	85,73	86,18	**PHP 8-8V1800TB**
		477,52	A-2	5050	482,60	19,00	69,85	127,00	238,13	25,40	127,00	85,73	95,25	**PHP 8-8V1900TB**
		502,92	A-2	5050	508,00	20,00	69,85	127,00	238,13	25,40	127,00	85,73	102,06	**PHP 8-8V2000TB**
		533,40	A-2	5050	538,48	21,20	69,85	127,00	238,13	25,40	127,00	85,73	111,13	**PHP 8-8V2120TB**
		563,88	A-3	5050	568,96	22,40	69,85	127,00	238,13	25,40	127,00	85,73	136,08	**PHP 8-8V2240TB**
		624,84	A-3	5050	629,92	24,80	69,85	127,00	238,13	25,40	127,00	85,73	140,16	**PHP 8-8V2480TB**
		756,92	A-3	5050	762,00	30,00	69,85	127,00	238,13	25,40	127,00	85,73	142,88	**PHP 8-8V3000TB**
		896,62	A-3	5050	901,70	35,50	69,85	127,00	238,13	25,40	127,00	85,73	188,24	**PHP 8-8V3550TB**
		1010,92	A-3	5050	1016,00	40,00	69,85	127,00	238,13	25,40	127,00	85,73	213,19	**PHP 8-8V4000TB**
		1125,22	A-3	5050	1130,30	44,50	69,85	127,00	238,13	25,40	127,00	85,73	265,35	**PHP 8-8V4450TB**
		1341,12	A-3	6050	1346,20	53,00	69,85	127,00	238,13	25,40	127,00	85,73	317,51	**PHP 8-8V5300TB**
8V	**10**	330,20	A-1	4545	335,28	13,20	57,15	125,41	295,28	25,40	114,30	155,58	68,04	**PHP 10-8V1320TB**
		350,52	A-1	4545	355,60	14,00	57,15	125,41	295,28	25,40	114,30	155,58	79,38	**PHP 10-8V1400TB**
		375,92	A-1	5050	381,00	15,00	69,85	127,00	295,28	25,40	127,00	142,88	79,38	**PHP 10-8V1500TB**
		401,32	A-1	5050	406,40	16,00	69,85	127,00	295,28	25,40	127,00	142,88	99,79	**PHP 10-8V1600TB**
		426,72	A-2	5050	431,80	17,00	69,85	127,00	295,28	57,15	127,00	111,13	83,91	**PHP 10-8V1700TB**
		452,12	A-2	5050	457,20	18,00	69,85	127,00	295,28	57,15	127,00	111,13	99,79	**PHP 10-8V1800TB**
		477,52	A-2	5050	482,60	19,00	69,85	127,00	295,28	57,15	127,00	111,13	108,86	**PHP 10-8V1900TB**
		502,92	A-2	5050	508,00	20,00	69,85	127,00	295,28	57,15	127,00	111,13	117,93	**PHP 10-8V2000TB**
		533,40	A-2	5050	538,48	21,20	69,85	127,00	295,28	57,15	127,00	111,13	127,01	**PHP 10-8V2120TB**
		563,88	A-3	5050	568,96	22,40	69,85	127,00	295,28	57,15	127,00	111,13	151,95	**PHP 10-8V2240TB**
		624,84	A-3	5050	629,92	24,80	69,85	127,00	295,28	57,15	127,00	111,13	162,39	**PHP 10-8V2480TB**
		756,92	A-3	5050	762,00	30,00	69,85	127,00	295,28	57,15	127,00	111,13	167,83	**PHP 10-8V3000TB**
		896,62	A-3	5050	901,70	35,50	69,85	127,00	295,28	57,15	127,00	111,13	217,72	**PHP 10-8V3550TB**
		1010,92	A-3	5050	1016,00	40,00	69,85	127,00	295,28	57,15	127,00	111,13	249,48	**PHP 10-8V4000TB**
		1125,22	A-3	6050	1130,30	44,50	69,85	127,00	295,28	57,15	127,00	111,13	306,17	**PHP 10-8V4450TB**
		1341,12	A-3	6050	1346,20	53,00	69,85	127,00	295,28	57,15	127,00	111,13	394,63	**PHP 10-8V5300TB**

* Mass does not include bushings.

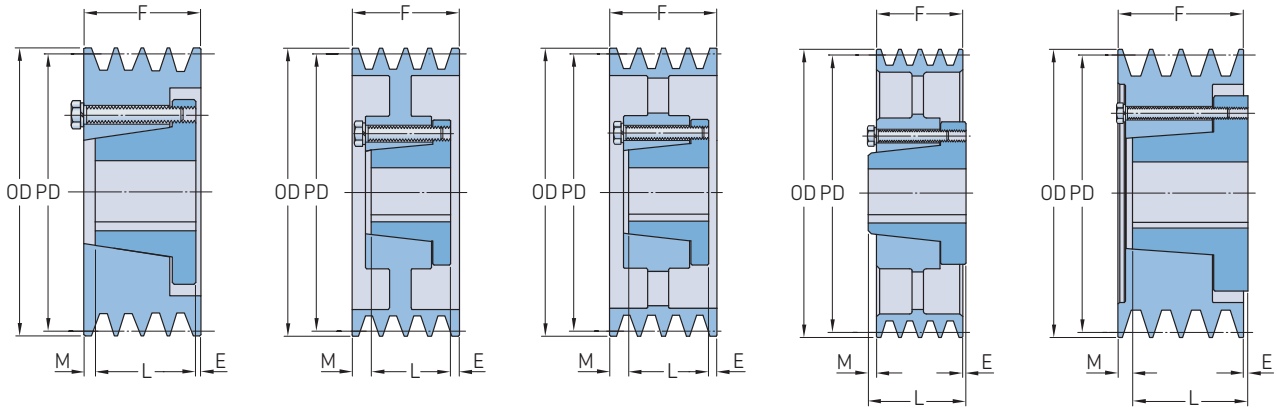

Type A-1 Type A-2 Type A-3 Type C-3 Type D-1

Section	Number of grooves	Pitch diameter PD	Pulley type	Bushing number	Dimensions Outer diameter OD		Bore Min.	Bore Max.	E	F	L	M	Mass*	Designation
–	–	mm	–	–	mm	in.							kg	–
3V	**1**	54,61	E-1	JA	55,88	2,20	12,70	31,75	15,88	17,46	25,40	24	0,2	**PHP 1-3V220-JA**
		58,42	E-1	JA	59,69	2,35	12,70	31,75	15,08	17,46	25,40	23	0,2	**PHP 1-3V235-JA**
		62,23	E-1	JA	63,50	2,50	12,70	31,75	15,08	17,46	25,40	23	0,2	**PHP 1-3V250-JA**
		66,04	D-1	JA	67,31	2,65	12,70	31,75	9,53	17,46	25,40	2	0,3	**PHP 1-3V265-JA**
		69,85	D-1	JA	71,12	2,80	12,70	31,75	9,53	17,46	25,40	2	0,3	**PHP 1-3V280-JA**
		74,93	D-1	JA	76,20	3,00	12,70	31,75	9,53	17,46	25,40	2	0,4	**PHP 1-3V300-JA**
		78,74	D-1	JA	80,01	3,15	12,70	31,75	9,53	17,46	25,40	2	0,4	**PHP 1-3V315-JA**
		83,82	D-1	JA	85,09	3,35	12,70	31,75	9,53	17,46	25,40	2	0,5	**PHP 1-3V335-JA**
		91,44	D-1	SH	92,71	3,65	12,70	41,28	16,67	17,46	33,34	1	0,6	**PHP 1-3V365-SH**
		103,38	D-1	SH	104,65	4,12	12,70	41,28	16,67	17,46	33,34	1	0,8	**PHP 1-3V412-SH**
		113,03	D-1	SH	114,30	4,50	12,70	41,28	16,67	17,46	33,34	1	1,0	**PHP 1-3V450-SH**
		119,38	D-1	SH	120,65	4,75	12,70	41,28	16,67	17,46	33,34	1	1,1	**PHP 1-3V475-SH**
		125,73	D-1	SH	127,00	5,00	12,70	41,28	16,67	17,46	33,34	1	1,2	**PHP 1-3V500-SH**
		133,35	D-1	SH	134,62	5,30	12,70	41,28	16,67	17,46	33,34	1	1,3	**PHP 1-3V530-SH**
		140,97	D-2	SH	142,24	5,60	12,70	41,28	16,67	17,46	33,34	1	1,4	**PHP 1-3V560-SH**
		151,13	D-2	SH	152,40	6,00	12,70	41,28	16,67	17,46	33,34	1	1,5	**PHP 1-3V600-SH**
		163,83	D-2	SH	165,10	6,50	12,70	41,28	16,67	17,46	33,34	1	1,9	**PHP 1-3V650-SH**
		173,99	D-3	SH	175,26	6,90	12,70	41,28	16,67	17,46	33,34	1	2,0	**PHP 1-3V690-SH**
		201,93	D-3	SDS	203,20	8,00	12,70	50,80	16,67	17,46	33,34	1	2,6	**PHP 1-3V800-SDS**
		267,97	D-3	SDS	269,24	10,60	12,70	50,80	16,67	17,46	33,34	1	3,6	**PHP 1-3V1060-SDS**
		354,33	C-3	SK	355,60	14,00	12,70	66,68	19,84	17,46	33,34	12	6,7	**PHP 1-3V1400-SK**
		481,33	C-3	SK	482,60	19,00	12,70	66,68	19,84	17,46	33,34	12	10,9	**PHP 1-3V1900-SK**
3V	**2**	54,61	E-1	JA	55,88	2,20	12,70	31,75	8,73	27,78	25,40	24	0,3	**PHP 2-3V220-JA**
		58,42	E-1	JA	59,69	2,35	12,70	31,75	25,40	27,78	25,40	23	0,3	**PHP 2-3V235-JA**
		62,23	E-1	JA	63,50	2,50	12,70	31,75	25,40	27,78	25,40	23	0,3	**PHP 2-3V250-JA**
		66,04	D-1	JA	67,31	2,65	12,70	31,75	9,53	27,78	25,40	12	0,4	**PHP 2-3V265-JA**
		69,85	D-1	JA	71,12	2,80	12,70	31,75	9,53	27,78	25,40	12	0,4	**PHP 2-3V280-JA**
		74,93	D-1	JA	76,20	3,00	12,70	31,75	9,53	27,78	25,40	12	0,5	**PHP 2-3V300-JA**
		78,74	D-1	JA	80,01	3,15	12,70	31,75	9,53	27,78	25,40	12	0,5	**PHP 2-3V315-JA**
		83,82	D-1	SH	85,09	3,35	12,70	41,28	13,49	27,78	33,34	8	0,6	**PHP 2-3V335-SH**
		91,44	D-1	SH	92,71	3,65	12,70	41,28	13,49	27,78	33,34	8	0,7	**PHP 2-3V365-SH**
		103,38	D-1	SH	104,65	4,12	12,70	41,28	8,73	27,78	33,34	3	1,0	**PHP 2-3V412-SH**
		113,03	D-1	SH	114,30	4,50	12,70	41,28	8,73	27,78	33,34	3	1,2	**PHP 2-3V450-SH**
		119,38	D-1	SH	120,65	4,75	12,70	41,28	8,73	27,78	33,34	3	1,4	**PHP 2-3V475-SH**
		125,73	D-1	SH	127,00	5,00	12,70	41,28	8,73	27,78	33,34	3	1,5	**PHP 2-3V500-SH**
		133,35	D-1	SH	134,62	5,30	12,70	41,28	8,73	27,78	33,34	3	1,8	**PHP 2-3V530-SH**
		140,97	D-2	SH	142,24	5,60	12,70	41,28	8,73	27,78	33,34	3	1,8	**PHP 2-3V560-SH**
		151,13	D-2	SH	152,40	6,00	12,70	41,28	8,73	27,78	33,34	3	2,0	**PHP 2-3V600-SH**
		163,83	D-2	SDS	165,10	6,50	12,70	50,80	8,73	27,78	33,34	3	2,7	**PHP 2-3V650-SDS**
		173,99	D-2	SDS	175,26	6,90	12,70	50,80	8,73	27,78	33,34	3	3,4	**PHP 2-3V690-SDS**
		201,93	D-3	SDS	203,20	8,00	12,70	50,80	8,73	27,78	33,34	3	3,9	**PHP 2-3V800-SDS**
		267,97	C-3	SK	269,24	10,60	12,70	66,68	13,49	27,78	33,34	8	5,7	**PHP 2-3V1060-SK**
		354,33	C-3	SK	355,60	14,00	12,70	66,68	13,49	27,78	33,34	8	8,9	**PHP 2-3V1400-SK**
		481,33	C-3	SK	482,60	19,00	12,70	66,68	13,49	27,78	33,34	8	12,3	**PHP 2-3V1900-SK**
		633,73	C-3	SF	635,00	25,00	12,70	74,61	15,08	27,78	52,39	10	17,2	**PHP 2-3V2500-SF**
3V	**3**	62,23	E-1	JA	63,50	2,50	12,70	31,75	35,72	38,10	25,40	23	0,4	**PHP 3-3V250-JA**
		66,04	D-1	JA	67,31	2,65	12,70	31,75	9,53	38,10	25,40	22	0,5	**PHP 3-3V265-JA**
		69,85	D-1	JA	71,12	2,80	12,70	31,75	9,53	38,10	25,40	22	0,6	**PHP 3-3V280-JA**
		74,93	E-1	SH	76,20	3,00	12,70	41,28	29,37	38,10	33,34	25	0,8	**PHP 3-3V300-SH**
		78,74	E-1	SH	80,01	3,15	12,70	41,28	29,37	38,10	33,34	25	0,8	**PHP 3-3V315-SH**
		83,82	D-1	SH	85,09	3,35	12,70	41,28	13,49	38,10	33,34	18	0,9	**PHP 3-3V335-SH**
		91,44	D-1	SH	92,71	3,65	12,70	41,28	13,49	38,10	33,34	18	1,0	**PHP 3-3V365-SH**
		103,38	A-1	SH	104,65	4,12	12,70	41,28	0,79	38,10	33,34	4	1,3	**PHP 3-3V412-SH**

* Mass does not include bushings.

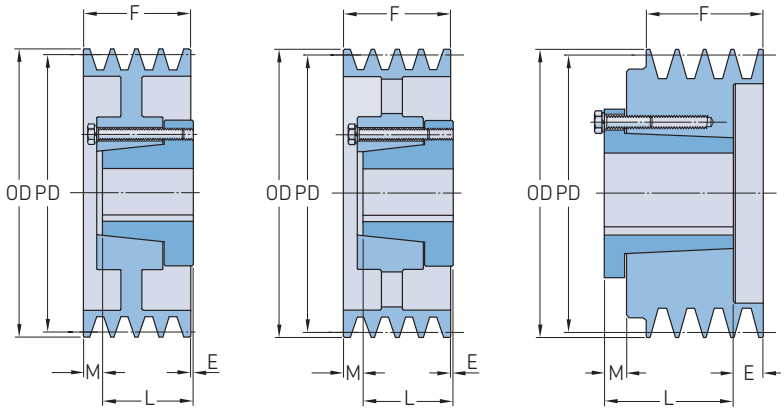

Section	Number of grooves	Pitch diameter PD	Pulley type	Bushing number	Dimensions Outer diameter OD		Bore Min.	Max.	E	F	L	M	Mass*	Designation
–	–	mm	–	–	mm	in.							kg	–
3V	3	113,03	A-1	SDS	114,30	4,50	12,70	50,80	0,79	38,10	33,34	4	1,6	**PHP 3-3V450-SDS**
		119,38	A-1	SDS	120,65	4,75	12,70	50,80	0,79	38,10	33,34	4	1,8	**PHP 3-3V475-SDS**
		125,73	A-1	SDS	127,00	5,00	12,70	50,80	0,79	38,10	33,34	4	2,0	**PHP 3-3V500-SDS**
		133,35	A-1	SDS	134,62	5,30	12,70	50,80	0,79	38,10	33,34	4	2,4	**PHP 3-3V530-SDS**
		140,97	A-1	SDS	142,24	5,60	12,70	50,80	0,79	38,10	33,34	4	2,7	**PHP 3-3V560-SDS**
		151,13	A-2	SDS	152,40	6,00	12,70	50,80	0,79	38,10	33,34	4	3,2	**PHP 3-3V600-SDS**
		163,83	A-2	SDS	165,10	6,50	12,70	50,80	0,79	38,10	33,34	4	3,7	**PHP 3-3V650-SDS**
		173,99	A-2	SDS	175,26	6,90	12,70	50,80	0,79	38,10	33,34	4	4,0	**PHP 3-3V690-SDS**
		201,93	D-2	SK	203,20	8,00	12,70	66,68	13,49	38,10	33,34	2	5,1	**PHP 3-3V800-SK**
		267,97	D-3	SK	269,24	10,60	12,70	66,68	13,49	38,10	33,34	2	6,4	**PHP 3-3V1060-SK**
		354,33	D-3	SK	355,60	14,00	12,70	66,68	13,49	38,10	33,34	2	9,8	**PHP 3-3V1400-SK**
		405,13	D-3	SK	406,40	16,00	12,70	66,68	13,49	38,10	33,34	2	11,4	**PHP 3-3V1600-SK**
		481,33	D-3	SF	482,60	19,00	12,70	74,61	15,08	38,10	52,39	1	14,6	**PHP 3-3V1900-SF**
		633,73	D-3	SF	635,00	25,00	12,70	74,61	15,08	38,10	52,39	1	22,7	**PHP 3-3V2500-SF**
		849,63	D-3	SF	850,90	33,50	22,23	88,90	15,08	38,10	52,39	1	35,4	**PHP 3-3V3350-SF**
3V	4	66,04	D-1	JA	67,31	2,65	12,70	31,75	9,53	48,42	25,40	15	0,6	**PHP 4-3V265-JA**
		69,85	D-1	JA	71,12	2,80	12,70	31,75	9,53	48,42	25,40	15	0,8	**PHP 4-3V280-JA**
		74,93	E-1	SH	76,20	3,00	12,70	41,28	12,70	48,42	33,34	23	0,9	**PHP 4-3V300-SH**
		78,74	E-1	SH	80,01	3,15	12,70	41,28	12,70	48,42	33,34	23	1,0	**PHP 4-3V315-SH**
		83,82	D-1	SH	85,09	3,35	12,70	41,28	13,49	48,42	33,34	29	1,0	**PHP 4-3V335-SH**
		91,44	D-1	SH	92,71	3,65	12,70	41,28	13,49	48,42	33,34	29	1,3	**PHP 4-3V365-SH**
		103,38	A-1	SH	104,65	4,12	12,70	41,28	3,97	48,42	33,34	11	1,5	**PHP 4-3V412-SH**
		113,03	A-1	SDS	114,30	4,50	12,70	50,80	3,97	48,42	33,34	11	1,8	**PHP 4-3V450-SDS**
		119,38	A-1	SDS	120,65	4,75	12,70	50,80	3,97	48,42	33,34	11	2,1	**PHP 4-3V475-SDS**
		125,73	A-1	SDS	127,00	5,00	12,70	50,80	3,97	48,42	33,34	11	2,4	**PHP 4-3V500-SDS**
		133,35	A-1	SDS	134,62	5,30	12,70	50,80	3,97	48,42	33,34	11	2,6	**PHP 4-3V530-SDS**
		140,97	A-1	SDS	142,24	5,60	12,70	50,80	3,97	48,42	33,34	11	3,1	**PHP 4-3V560-SDS**
		151,13	D-1	SK	152,40	6,00	12,70	66,68	3,97	48,42	33,34	3	3,8	**PHP 4-3V600-SK**
		163,83	D-1	SK	165,10	6,50	12,70	66,68	3,97	48,42	33,34	3	4,5	**PHP 4-3V650-SK**
		173,99	D-1	SK	175,26	6,90	12,70	66,68	3,97	48,42	33,34	3	5,4	**PHP 4-3V690-SK**
		201,93	D-2	SK	203,20	8,00	12,70	66,68	3,97	48,42	33,34	3	5,9	**PHP 4-3V800-SK**
		267,97	D-3	SK	269,24	10,60	12,70	66,68	3,97	48,42	33,34	3	7,5	**PHP 4-3V1060-SK**
		354,33	D-3	SK	355,60	14,00	12,70	66,68	3,97	48,42	33,34	3	10,2	**PHP 4-3V1400-SK**
		405,13	D-3	SK	406,40	16,00	12,70	66,68	3,97	48,42	33,34	3	12,6	**PHP 4-3V1600-SK**
		481,33	D-3	SF	482,60	19,00	12,70	74,61	5,56	48,42	52,39	2	15,9	**PHP 4-3V1900-SF**
		633,73	D-3	SF	635,00	25,00	12,70	74,61	5,56	48,42	52,39	2	25,9	**PHP 4-3V2500-SF**
		849,63	C-3	E	850,90	33,50	22,23	88,90	16,67	48,42	69,85	5	38,1	**PHP 4-3V3350-E**
3V	5	119,38	A-1	SDS	120,65	4,75	12,70	50,80	3,97	58,74	49,21	21	2,3	**PHP 5-3V475-SDS**
		125,73	A-1	SDS	127,00	5,00	12,70	50,80	3,97	58,74	49,21	21	2,6	**PHP 5-3V500-SDS**
		133,35	A-1	SK	134,62	5,30	12,70	66,68	3,97	58,74	49,21	6	3,0	**PHP 5-3V530-SK**
		140,97	A-1	SK	142,24	5,60	12,70	66,68	3,97	58,74	49,21	6	3,4	**PHP 5-3V560-SK**
		151,13	A-1	SK	152,40	6,00	12,70	66,68	3,97	58,74	49,21	6	4,0	**PHP 5-3V600-SK**
		163,83	A-2	SK	165,10	6,50	12,70	66,68	3,97	58,74	49,21	6	4,8	**PHP 5-3V650-SK**
		173,99	A-2	SK	175,26	6,90	12,70	66,68	3,97	58,74	49,21	6	5,8	**PHP 5-3V690-SK**
		201,93	A-2	SK	203,20	8,00	12,70	66,68	3,97	58,74	49,21	6	6,3	**PHP 5-3V800-SK**
		267,97	A-3	SK	269,24	10,60	12,70	66,68	3,97	58,74	49,21	6	7,7	**PHP 5-3V1060-SK**
		354,33	A-3	SF	355,60	14,00	12,70	74,61	0,79	58,74	74,61	6	11,8	**PHP 5-3V1400-SF**
		481,33	A-3	SF	482,60	19,00	12,70	74,61	0,79	58,74	74,61	6	18,6	**PHP 5-3V1900-SF**
		633,73	D-3	E	635,00	25,00	22,23	88,90	13,49	58,74	69,85	2	28,6	**PHP 5-3V2500-E**
		849,63	D-3	E	850,90	33,50	22,23	88,90	13,49	58,74	69,85	2	43,1	**PHP 5-3V3350-E**
3V	6	119,38	D-1	SK	120,65	4,75	12,70	66,68	16,67	69,06	49,21	37	2,7	**PHP 6-3V475-SK**
		125,73	D-1	SK	127,00	5,00	12,70	66,68	16,67	69,06	49,21	37	2,9	**PHP 6-3V500-SK**
		133,35	A-1	SK	134,62	5,30	12,70	66,68	13,49	69,06	49,21	6	3,1	**PHP 6-3V530-SK**

* Mass does not include bushings.

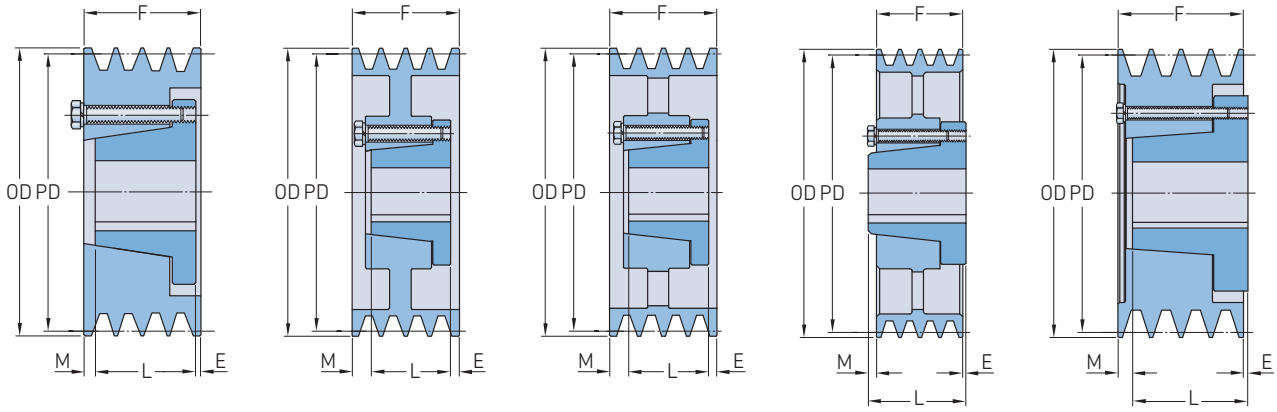

Type A-1 Type A-2 Type A-3 Type C-3 Type D-1

Section	Number of grooves	Pitch diameter PD	Pulley type	Bushing number	Dimensions Outer diameter OD		Bore Min.	Bore Max.	E	F	L	M	Mass*	Designation
–	–	mm	–	–	mm	in.							kg	–
3V	**6**	140,97	A-1	SK	142,24	5,60	12,70	66,68	13,49	69,06	49,21	6	3,9	**PHP 6-3V560-SK**
		151,13	A-1	SK	152,40	6,00	12,70	66,68	13,49	69,06	49,21	6	4,5	**PHP 6-3V600-SK**
		163,83	A-1	SK	165,10	6,50	12,70	66,68	13,49	69,06	49,21	6	5,2	**PHP 6-3V650-SK**
		173,99	A-1	SK	175,26	6,90	12,70	66,68	13,49	69,06	49,21	6	6,1	**PHP 6-3V690-SK**
		201,93	A-2	SK	203,20	8,00	12,70	74,61	2,38	69,06	49,21	17	6,8	**PHP 6-3V800-SK**
		267,97	A-3	SF	269,24	10,60	12,70	74,61	0,79	69,06	74,61	16	10,3	**PHP 6-3V1060-SF**
		354,33	A-3	SF	355,60	14,00	22,23	88,90	0,79	69,06	74,61	16	13,4	**PHP 6-3V1400-SF**
		481,33	D-3	E	482,60	19,00	22,23	88,90	3,97	69,06	69,85	3	20,0	**PHP 6-3V1900-E**
		633,73	D-3	E	635,00	25,00	22,23	88,90	3,97	69,06	69,85	3	29,5	**PHP 6-3V2500-E**
		849,63	D-3	E	850,90	33,50	22,23	88,90	3,97	69,06	69,85	3	45,8	**PHP 6-3V3350-E**
3V	**8**	119,38	D-1	SK	120,65	4,75	12,70	66,68	16,67	89,69	49,21	57	3,3	**PHP 8-3V475-SK**
		125,73	D-1	SK	127,00	5,00	12,70	66,68	16,67	89,69	49,21	57	3,5	**PHP 8-3V500-SK**
		133,35	A-1	SK	134,62	5,30	12,70	66,68	13,49	89,69	49,21	27	4,2	**PHP 8-3V530-SK**
		140,97	A-1	SK	142,24	5,60	12,70	66,68	13,49	89,69	49,21	27	4,8	**PHP 8-3V560-SK**
		151,13	A-1	SK	152,40	6,00	12,70	66,68	13,49	89,69	49,21	27	5,7	**PHP 8-3V600-SK**
		163,83	A-1	SK	165,10	6,50	12,70	66,68	13,49	89,69	49,21	27	7,3	**PHP 8-3V650-SK**
		173,99	A-1	SK	175,26	6,90	12,70	66,68	13,49	89,69	49,21	27	8,2	**PHP 8-3V690-SK**
		201,93	A-1	SF	203,20	8,00	12,70	74,61	7,14	89,69	74,61	21	9,5	**PHP 8-3V800-SF**
		267,97	A-2	SF	269,24	10,60	12,70	74,61	7,14	89,69	74,61	21	11,6	**PHP 8-3V1060-SF**
		354,33	A-3	E	355,60	14,00	22,23	88,90	2,38	89,69	69,85	17	17,5	**PHP 8-3V1400-E**
		481,33	A-3	E	482,60	19,00	22,23	88,90	2,38	89,69	69,85	17	24,5	**PHP 8-3V1900-E**
		633,73	A-3	E	635,00	25,00	22,23	88,90	2,38	89,69	69,85	17	36,3	**PHP 8-3V2500-E**
		849,63	D-3	F	850,90	33,50	25,40	101,60	7,14	89,69	95,25	17	14,5	**PHP 8-3V3350-F**
3V	**10**	119,38	D-1	SK	120,65	4,75	12,70	66,68	16,67	110,33	49,21	78	3,8	**PHP 10-3V475-SK**
		125,73	D-1	SK	127,00	5,00	12,70	66,68	16,67	110,33	49,21	78	4,3	**PHP 10-3V500-SK**
		133,35	A-1	SK	134,62	5,30	12,70	66,68	16,67	110,33	49,21	44	4,6	**PHP 10-3V530-SK**
		140,97	A-1	SK	142,24	5,60	12,70	66,68	16,67	110,33	49,21	44	5,2	**PHP 10-3V560-SK**
		151,13	A-1	SK	152,40	6,00	12,70	66,68	16,67	110,33	49,21	44	6,6	**PHP 10-3V600-SK**
		163,83	A-1	SK	165,10	6,50	12,70	66,68	16,67	110,33	49,21	44	7,9	**PHP 10-3V650-SK**
		173,99	A-1	SK	175,26	6,90	12,70	66,68	16,67	110,33	49,21	44	9,1	**PHP 10-3V690-SK**
		201,93	A-1	SF	203,20	8,00	12,70	74,61	16,67	110,33	52,39	41	10,9	**PHP 10-3V800-SF**
		267,97	A-2	E	269,24	10,60	22,23	88,90	2,38	110,33	52,39	38	13,7	**PHP 10-3V1060-E**
		354,33	A-3	E	355,60	14,00	22,23	88,90	2,38	110,33	52,39	38	19,4	**PHP 10-3V1400-E**
		481,33	A-3	E	482,60	19,00	22,23	88,90	2,38	110,33	52,39	38	29,0	**PHP 10-3V1900-E**
		633,73	D-3	F	635,00	25,00	25,40	101,60	0,79	110,33	95,25	16	44,9	**PHP 10-3V2500-F**
		849,63	D-3	F	850,90	33,50	25,40	101,60	0,79	110,33	120,65	16	71,7	**PHP 10-3V3350-F**
5V	**2**	109,22	D-1	SH	111,76	4,40	12,70	41,28	8,73	42,86	33,34	18	2,6	**PHP 2-5V440-SH**
		115,57	E-1	SDS	118,11	4,65	12,70	50,80	21,43	42,86	33,34	12	3,0	**PHP 2-5V465-SDS**
		121,92	A-1	SDS	124,46	4,90	12,70	50,80	0,79	42,86	33,34	9	3,1	**PHP 2-5V490-SDS**
		129,54	A-1	SDS	132,08	5,20	12,70	50,80	0,79	42,86	33,34	9	3,2	**PHP 2-5V520-SDS**
		137,16	A-1	SDS	139,70	5,50	12,70	50,80	0,79	42,86	33,34	9	3,3	**PHP 2-5V550-SDS**
		147,32	A-1	SDS	149,86	5,90	12,70	50,80	0,79	42,86	33,34	9	3,5	**PHP 2-5V590-SDS**
		157,48	D-1	SK	160,02	6,30	12,70	66,68	8,73	42,86	49,21	2	4,3	**PHP 2-5V630-SK**
		167,64	D-1	SK	170,18	6,70	12,70	66,68	8,73	42,86	49,21	2	4,8	**PHP 2-5V670-SK**
		177,80	D-1	SK	180,34	7,10	12,70	66,68	8,73	42,86	49,21	2	5,2	**PHP 2-5V710-SK**
		187,96	D-1	SK	190,50	7,50	12,70	66,68	8,73	42,86	49,21	2	5,7	**PHP 2-5V750-SK**
		200,66	D-2	SK	203,20	8,00	12,70	66,68	8,73	42,86	49,21	2	5,9	**PHP 2-5V800-SK**
		213,36	D-2	SK	215,90	8,50	12,70	66,68	8,73	42,86	49,21	2	6,4	**PHP 2-5V850-SK**
		226,06	D-3	SK	228,60	9,00	12,70	66,68	8,73	42,86	33,34	2	6,9	**PHP 2-5V900-SK**
		232,41	D-3	SK	234,95	9,25	12,70	66,68	8,73	42,86	33,34	2	6,9	**PHP 2-5V925-SK**
		245,11	D-3	SK	247,65	9,75	12,70	66,68	8,73	42,86	49,21	2	7,0	**PHP 2-5V975-SK**
		259,08	D-3	SK	261,62	10,30	12,70	66,68	8,73	42,86	49,21	2	7,0	**PHP 2-5V1030-SK**
		274,32	D-3	SK	276,86	10,90	12,70	66,68	8,73	42,86	49,21	2	7,5	**PHP 2-5V1090-SK**

* Mass does not include bushings.

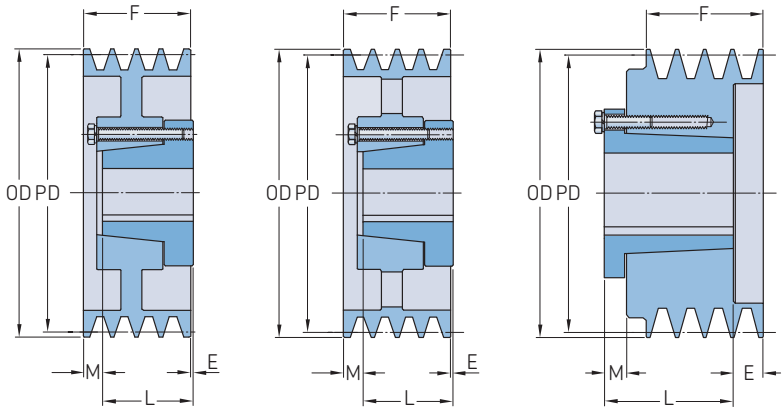

Section	Number of grooves	Pitch diameter PD	Pulley type	Bushing number	Dimensions Outer diameter OD		Bore Min.	Bore Max.	E	F	L	M	Mass*	Designation
–	–	mm	–	–	mm	in.							kg	–
5V	**2**	284,48	D-3	SK	287,02	11,30	12,70	66,68	8,73	42,86	49,21	2	8,1	**PHP 2-5V1130-SK**
		297,18	D-3	SK	299,72	11,80	12,70	66,68	8,73	42,86	49,21	2	8,6	**PHP 2-5V1180-SK**
		314,96	D-3	SF	317,50	12,50	12,70	74,61	10,32	42,86	52,39	1	9,5	**PHP 2-5V1250-SF**
		332,74	D-3	SF	335,28	13,20	12,70	74,61	10,32	42,86	52,39	1	10,3	**PHP 2-5V1320-SF**
		353,06	D-3	SF	355,60	14,00	12,70	74,61	10,32	42,86	52,39	1	11,5	**PHP 2-5V1400-SF**
		378,46	D-3	SF	381,00	15,00	12,70	74,61	10,32	42,86	52,39	1	12,4	**PHP 2-5V1500-SF**
		403,86	D-3	SF	406,40	16,00	12,70	74,61	10,32	42,86	52,39	1	13,2	**PHP 2-5V1600-SF**
		472,44	D-3	SF	474,98	18,70	12,70	74,61	10,32	42,86	52,39	1	16,3	**PHP 2-5V1870-SF**
		535,94	D-3	SF	538,48	21,20	12,70	74,61	10,32	42,86	26,99	1	19,5	**PHP 2-5V2120-SF**
		596,90	C-3	E	599,44	23,60	22,23	88,90	23,02	42,86	69,85	4	25,0	**PHP 2-5V2360-E**
		708,66	C-3	E	711,20	28,00	22,23	88,90	23,02	42,86	69,85	4	30,4	**PHP 2-5V2800-E**
5V	**3**	109,22	E-1	SDS	111,76	4,40	12,70	50,80	43,66	60,33	33,34	17	3,0	**PHP 3-5V440-SDS**
		115,57	E-1	SDS	118,11	4,65	12,70	50,80	43,66	60,33	33,34	17	3,5	**PHP 3-5V465-SDS**
		121,92	A-1	SDS	124,46	4,90	12,70	50,80	10,32	60,33	33,34	17	3,5	**PHP 3-5V490-SDS**
		129,54	A-1	SDS	132,08	5,20	12,70	50,80	10,32	60,33	33,34	17	3,6	**PHP 3-5V520-SDS**
		137,16	A-1	SDS	139,70	5,50	12,70	50,80	10,32	60,33	33,34	17	3,7	**PHP 3-5V550-SDS**
		147,32	A-1	SDS	149,86	5,90	12,70	50,80	10,32	60,33	33,34	17	3,9	**PHP 3-5V590-SDS**
		157,48	A-1	SK	160,02	6,30	12,70	66,68	7,14	60,33	49,21	4	4,7	**PHP 3-5V630-SK**
		167,64	A-1	SK	170,18	6,70	12,70	66,68	7,14	60,33	49,21	4	5,3	**PHP 3-5V670-SK**
		177,80	A-1	SF	180,34	7,10	12,70	74,61	3,97	60,33	52,39	4	5,8	**PHP 3-5V710-SF**
		187,96	A-1	SF	190,50	7,50	12,70	74,61	3,97	60,33	52,39	4	6,8	**PHP 3-5V750-SF**
		200,66	A-1	SF	203,20	8,00	12,70	74,61	3,97	60,33	52,39	4	7,5	**PHP 3-5V800-SF**
		213,36	A-3	SF	215,90	8,50	12,70	74,61	3,97	60,33	52,39	4	8,2	**PHP 3-5V850-SF**
		226,06	A-3	SF	228,60	9,00	12,70	74,61	3,97	60,33	52,39	4	9,0	**PHP 3-5V900-SF**
		232,41	A-3	SF	234,95	9,25	12,70	74,61	3,97	60,33	52,39	4	9,4	**PHP 3-5V925-SF**
		245,11	A-3	SF	247,65	9,75	12,70	74,61	3,97	60,33	52,39	4	10,3	**PHP 3-5V975-SF**
		259,08	A-3	SF	261,62	10,30	12,70	74,61	3,97	60,33	52,39	4	11,2	**PHP 3-5V1030-SF**
		274,32	A-3	SF	276,86	10,90	12,70	74,61	3,97	60,33	52,39	4	12,1	**PHP 3-5V1090-SF**
		284,48	A-3	SF	287,02	11,30	12,70	74,61	3,97	60,33	52,39	4	12,8	**PHP 3-5V1130-SF**
		297,18	D-3	SF	299,72	11,80	12,70	74,61	3,97	60,33	52,39	4	13,5	**PHP 3-5V1180-SF**
		314,96	D-3	E	317,50	12,50	22,23	88,90	10,32	60,33	69,85	1	15,4	**PHP 3-5V1250-E**
		332,74	D-3	E	335,28	13,20	22,23	88,90	10,32	60,33	69,85	1	15,9	**PHP 3-5V1320-E**
		353,06	D-3	E	355,60	14,00	22,23	88,90	10,32	60,33	69,85	1	16,8	**PHP 3-5V1400-E**
		378,46	D-3	E	381,00	15,00	22,23	88,90	10,32	60,33	69,85	1	17,2	**PHP 3-5V1500-E**
		403,86	D-3	E	406,40	16,00	22,23	88,90	10,32	60,33	69,85	1	17,8	**PHP 3-5V1600-E**
		472,44	D-3	E	474,98	18,70	22,23	88,90	10,32	60,33	69,85	1	21,4	**PHP 3-5V1870-E**
		535,94	D-3	E	538,48	21,20	22,23	88,90	10,32	60,33	69,85	1	25,0	**PHP 3-5V2120-E**
		596,90	D-3	E	599,44	23,60	22,23	88,90	10,32	60,33	69,85	1	31,8	**PHP 3-5V2360-E**
		708,66	D-3	E	711,20	28,00	22,23	88,90	10,32	60,33	69,85	1	39,2	**PHP 3-5V2800-E**
		797,56	C-3	F	800,10	31,50	25,40	101,60	19,84	60,33	95,25	15	52,6	**PHP 3-5V3150-F**
		949,96	C-3	F	952,50	37,50	25,40	101,60	19,84	60,33	95,25	15	64,0	**PHP 3-5V3750-F**
		1267,46	C-3	F	1270,00	50,00	25,40	101,60	19,84	60,33	95,25	15	95,7	**PHP 3-5V5000-F**
5V	**4**	109,22	E-1	SD	111,76	4,40	12,70	50,80	48,42	77,79	46,04	17	3,4	**PHP 4-5V440-SD**
		115,57	E-1	SD	118,11	4,65	12,70	50,80	48,42	77,79	46,04	17	3,6	**PHP 4-5V465-SD**
		121,92	A-1	SD	124,46	4,90	12,70	50,80	16,67	77,79	46,04	15	3,9	**PHP 4-5V490-SD**
		129,54	A-1	SD	132,08	5,20	12,70	50,80	16,67	77,79	46,04	15	4,0	**PHP 4-5V520-SD**
		137,16	A-1	SD	139,70	5,50	12,70	50,80	16,67	77,79	46,04	15	4,2	**PHP 4-5V550-SD**
		147,32	A-1	SD	149,86	5,90	12,70	50,80	16,67	77,79	46,04	15	4,6	**PHP 4-5V590-SD**
		157,48	A-1	SK	160,02	6,30	12,70	66,68	13,49	77,79	49,21	15	5,4	**PHP 4-5V630-SK**
		167,64	A-1	SK	170,18	6,70	12,70	66,68	13,49	77,79	49,21	15	6,2	**PHP 4-5V670-SK**
		177,80	A-1	SF	180,34	7,10	12,70	74,61	5,56	77,79	52,39	20	6,8	**PHP 4-5V710-SF**
		187,96	A-1	SF	190,50	7,50	12,70	74,61	5,56	77,79	52,39	20	7,7	**PHP 4-5V750-SF**

* Mass does not include bushings.

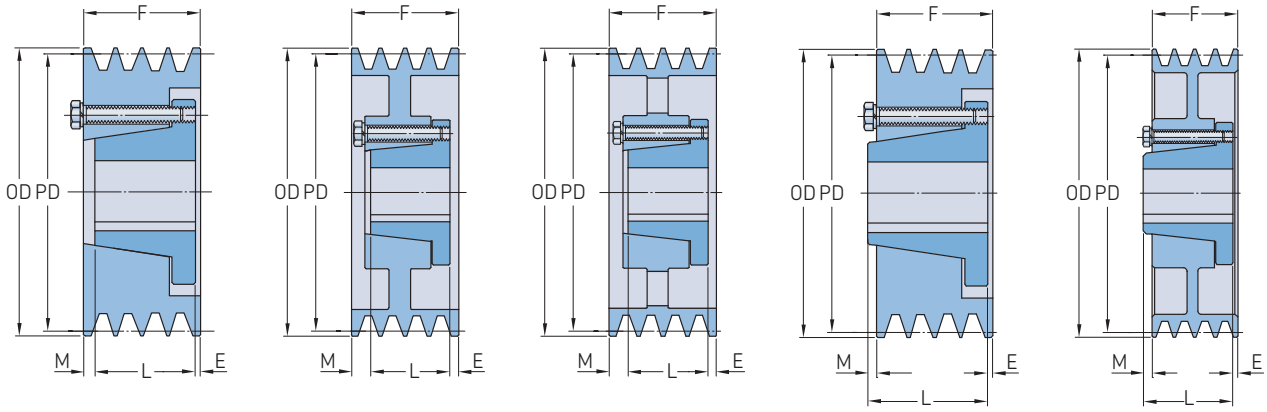

Type A-1 Type A-2 Type A-3 Type B-1 Type B-2

Section	Number of grooves	Pitch diameter PD	Pulley type	Bushing number	Dimensions Outer diameter OD		Bore Min.	Bore Max.	E	F	L	M	Mass*	Designation
–	–	mm	–	–	mm	in.							kg	–
5V	**4**	200,66	B-1	E	203,20	8,00	22,23	88,90	8,73	77,79	69,85	1	8,5	**PHP 4-5V800-E**
		213,36	B-1	E	215,90	8,50	22,23	88,90	8,73	77,79	69,85	1	9,9	**PHP 4-5V850-E**
		226,06	B-1	E	228,60	9,00	22,23	88,90	8,73	77,79	69,85	1	11,0	**PHP 4-5V900-E**
		232,41	B-1	E	234,95	9,25	22,23	88,90	8,73	77,79	69,85	1	11,7	**PHP 4-5V925-E**
		245,11	B-1	E	247,65	9,75	22,23	88,90	8,73	77,79	69,85	1	12,8	**PHP 4-5V975-E**
		259,08	B-1	E	261,62	10,30	22,23	88,90	8,73	77,79	69,85	1	13,5	**PHP 4-5V1030-E**
		274,32	B-2	E	276,86	10,90	22,23	88,90	8,73	77,79	69,85	1	13,9	**PHP 4-5V1090-E**
		284,48	A-3	E	287,02	11,30	22,23	88,90	7,14	77,79	69,85	1	14,5	**PHP 4-5V1130-E**
		297,18	B-2	E	299,72	11,80	22,23	88,90	8,73	77,79	69,85	1	15,0	**PHP 4-5V1180-E**
		314,96	A-3	E	317,50	12,50	22,23	88,90	7,14	77,79	69,85	1	16,5	**PHP 4-5V1250-E**
		332,74	A-3	E	335,28	13,20	22,23	88,90	7,14	77,79	69,85	1	17,3	**PHP 4-5V1320-E**
		353,06	A-3	E	355,60	14,00	22,23	88,90	7,14	77,79	69,85	1	18,2	**PHP 4-5V1400-E**
		378,46	A-3	E	381,00	15,00	22,23	88,90	7,14	77,79	69,85	1	19,7	**PHP 4-5V1500-E**
		403,86	A-3	E	406,40	16,00	22,23	88,90	7,14	77,79	69,85	1	20,2	**PHP 4-5V1600-E**
		472,44	A-3	E	474,98	18,70	22,23	88,90	2,38	77,79	69,85	1	24,3	**PHP 4-5V1870-E**
		535,94	A-3	E	538,48	21,20	22,23	88,90	2,38	77,79	69,85	1	28,4	**PHP 4-5V2120-E**
		596,90	C-3	F	599,44	23,60	25,40	101,60	11,91	77,79	95,25	6	37,9	**PHP 4-5V2360-F**
		708,66	C-3	F	711,20	28,00	25,40	101,60	11,91	77,79	95,25	6	57,2	**PHP 4-5V2800-F**
		797,56	C-3	F	800,10	31,50	25,40	101,60	11,91	77,79	95,25	6	67,1	**PHP 4-5V3150-F**
		949,96	C-3	F	952,50	37,50	25,40	101,60	11,91	77,79	95,25	6	77,1	**PHP 4-5V3750-F**
		1267,46	C-3	J	1270,00	50,00	38,10	114,30	19,05	77,79	117,48	21	112,5	**PHP 4-5V5000-J**
5V	**5**	109,22	E-1	SD	111,76	4,40	12,70	50,80	65,88	95,25	46,04	17	4,0	**PHP 5-5V440-SD**
		115,57	E-1	SD	118,11	4,65	12,70	50,80	65,88	95,25	46,04	17	4,2	**PHP 5-5V465-SD**
		121,92	A-1	SD	124,46	4,90	12,70	50,80	16,67	95,25	46,04	15	4,6	**PHP 5-5V490-SD**
		129,54	A-1	SD	132,08	5,20	12,70	50,80	16,67	95,25	46,04	15	4,9	**PHP 5-5V520-SD**
		137,16	A-1	SD	139,70	5,50	12,70	50,80	16,67	95,25	46,04	15	5,4	**PHP 5-5V550-SD**
		147,32	A-1	SK	149,86	5,90	12,70	66,68	13,49	95,25	49,21	12	6,0	**PHP 5-5V590-SK**
		157,48	A-1	SK	160,02	6,30	12,70	66,68	13,49	95,25	49,21	12	7,2	**PHP 5-5V630-SK**
		167,64	A-1	SF	170,18	6,70	12,70	74,61	13,49	95,25	52,39	12	8,4	**PHP 5-5V670-SF**
		177,80	A-1	SF	180,34	7,10	12,70	74,61	13,49	95,25	52,39	10	9,8	**PHP 5-5V710-SF**
		187,96	A-1	SF	190,50	7,50	12,70	74,61	13,49	95,25	52,39	10	10,3	**PHP 5-5V750-SF**
		200,66	A-1	E	203,20	8,00	22,23	88,90	15,08	95,25	69,85	10	10,8	**PHP 5-5V800-E**
		213,36	A-1	E	215,90	8,50	22,23	88,90	15,08	95,25	69,85	10	11,3	**PHP 5-5V850-E**
		226,06	A-1	E	228,60	9,00	22,23	88,90	15,08	95,25	69,85	10	11,9	**PHP 5-5V900-E**
		232,41	A-1	E	234,95	9,25	22,23	88,90	15,08	95,25	69,85	10	12,8	**PHP 5-5V925-E**
		245,11	A-1	E	247,65	9,75	22,23	88,90	15,08	95,25	69,85	10	14,5	**PHP 5-5V975-E**
		259,08	A-2	E	261,62	10,30	22,23	88,90	15,08	95,25	69,85	10	15,0	**PHP 5-5V1030-E**
		274,32	A-2	E	276,86	10,90	22,23	88,90	15,08	95,25	69,85	10	15,9	**PHP 5-5V1090-E**
		284,48	A-3	E	287,02	11,30	22,23	88,90	15,08	95,25	69,85	10	16,6	**PHP 5-5V1130-E**
		297,18	A-3	E	299,72	11,80	22,23	88,90	15,08	95,25	69,85	10	17,2	**PHP 5-5V1180-E**
		314,96	A-3	E	317,50	12,50	22,23	88,90	15,08	95,25	69,85	10	18,5	**PHP 5-5V1250-E**
		332,74	A-3	E	335,28	13,20	22,23	88,90	15,08	95,25	69,85	10	19,2	**PHP 5-5V1320-E**
		353,06	A-3	E	355,60	14,00	22,23	88,90	15,08	95,25	69,85	10	20,2	**PHP 5-5V1400-E**
		378,46	A-3	E	381,00	15,00	22,23	88,90	15,08	95,25	69,85	10	21,9	**PHP 5-5V1500-E**
		403,86	A-3	E	406,40	16,00	22,23	88,90	15,08	95,25	69,85	10	23,2	**PHP 5-5V1600-E**
		472,44	D-3	F	474,98	18,70	25,40	101,60	2,38	95,25	95,25	2	31,8	**PHP 5-5V1870-F**
		535,94	D-3	F	538,48	21,20	25,40	101,60	0,79	95,25	95,25	1	40,4	**PHP 5-5V2120-F**
		596,90	D-3	F	599,44	23,60	25,40	101,60	0,79	95,25	95,25	1	47,6	**PHP 5-5V2360-F**
		708,66	D-3	F	711,20	28,00	25,40	101,60	0,79	95,25	95,25	1	55,8	**PHP 5-5V2800-F**
		797,56	C-3	J	800,10	31,50	38,10	114,30	11,11	95,25	117,48	11	68,5	**PHP 5-5V3150-J**
		949,96	C-3	J	952,50	37,50	38,10	114,30	11,11	95,25	117,48	11	86,2	**PHP 5-5V3750-J**
		1267,46	C-3	J	1270,00	50,00	38,10	114,30	11,11	95,25	117,48	11	126,1	**PHP 5-5V5000-J**

* Mass does not include bushings.

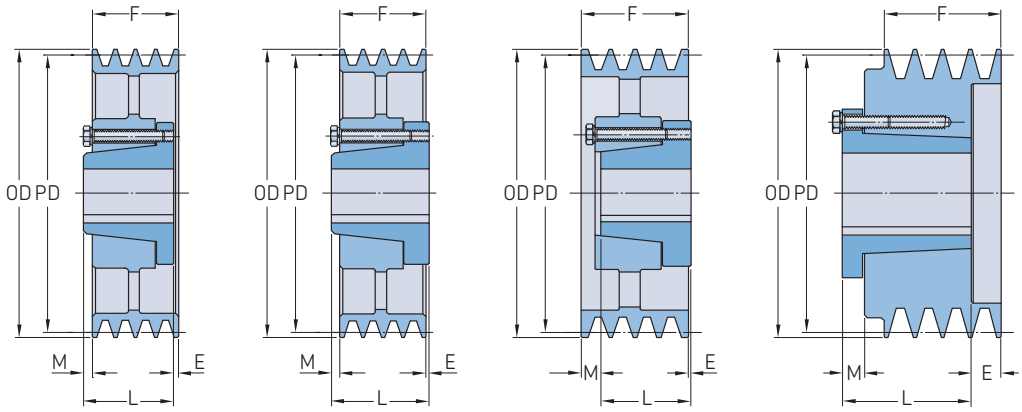

Type B-3 Type C-3 Type D-3 Type E-1

Section	Number of grooves	Pitch diameter PD	Pulley type	Bushing number	Dimensions Outer diameter OD		Bore Min.	Bore Max.	E	F	L	M	Mass*	Designation
–	–	mm	–	–	mm	in.							kg	–
5V	**6**	109,22	E-1	SD	111,76	4,40	12,70	50,80	96,04	112,71	46,04	17	4,6	**PHP 6-5V440-SD**
		115,57	E-1	SD	118,11	4,65	12,70	50,80	96,04	112,71	46,04	17	4,7	**PHP 6-5V465-SD**
		121,92	A-1	SD	124,46	4,90	12,70	50,80	16,67	112,71	46,04	50	5,1	**PHP 6-5V490-SD**
		129,54	A-1	SD	132,08	5,20	12,70	50,80	16,67	112,71	46,04	50	5,5	**PHP 6-5V520-SD**
		137,16	A-1	SD	139,70	5,50	12,70	50,80	16,67	112,71	46,04	50	6,0	**PHP 6-5V550-SD**
		147,32	A-1	SK	149,86	5,90	12,70	66,68	13,49	112,71	49,21	50	6,6	**PHP 6-5V590-SK**
		157,48	A-1	SK	160,02	6,30	12,70	66,68	13,49	112,71	49,21	50	7,9	**PHP 6-5V630-SK**
		167,64	A-1	SF	170,18	6,70	12,70	74,61	19,84	112,71	52,39	40	9,1	**PHP 6-5V670-SF**
		177,80	A-1	SF	180,34	7,10	12,70	74,61	19,84	112,71	52,39	40	9,9	**PHP 6-5V710-SF**
		187,96	A-1	SF	190,50	7,50	12,70	74,61	19,84	112,71	52,39	40	10,6	**PHP 6-5V750-SF**
		200,66	A-1	E	203,20	8,00	22,23	88,90	21,43	112,71	69,85	21	11,0	**PHP 6-5V800-E**
		213,36	A-1	E	215,90	8,50	22,23	88,90	21,43	112,71	69,85	21	12,1	**PHP 6-5V850-E**
		226,06	A-1	E	228,60	9,00	22,23	88,90	21,43	112,71	69,85	21	12,9	**PHP 6-5V900-E**
		232,41	A-1	E	234,95	9,25	22,23	88,90	21,43	112,71	69,85	21	13,7	**PHP 6-5V925-E**
		245,11	A-1	E	247,65	9,75	22,23	88,90	21,43	112,71	69,85	21	15,3	**PHP 6-5V975-E**
		259,08	A-2	E	261,62	10,30	22,23	88,90	21,43	112,71	69,85	21	16,6	**PHP 6-5V1030-E**
		274,32	A-2	E	276,86	10,90	22,23	88,90	21,43	112,71	69,85	21	17,3	**PHP 6-5V1090-E**
		284,48	A-3	E	287,02	11,30	22,23	88,90	21,43	112,71	69,85	21	18,1	**PHP 6-5V1130-E**
		297,18	A-2	E	299,72	11,80	22,23	88,90	21,43	112,71	69,85	21	18,7	**PHP 6-5V1180-E**
		314,96	B-3	F	317,50	12,50	25,40	101,60	18,26	112,71	95,25	1	26,4	**PHP 6-5V1250-F**
		332,74	B-3	F	335,28	13,20	25,40	101,60	18,26	112,71	95,25	1	29,0	**PHP 6-5V1320-F**
		353,06	B-3	F	355,60	14,00	25,40	101,60	18,26	112,71	95,25	1	29,9	**PHP 6-5V1400-F**
		378,46	B-3	F	381,00	15,00	25,40	101,60	18,26	112,71	95,25	1	30,8	**PHP 6-5V1500-F**
		403,86	B-3	F	406,40	16,00	25,40	101,60	18,26	112,71	95,25	1	35,2	**PHP 6-5V1600-F**
		472,44	D-3	F	474,98	18,70	25,40	101,60	0,79	112,71	95,25	18	38,9	**PHP 6-5V1870-F**
		535,94	D-3	F	538,48	21,20	25,40	101,60	0,79	112,71	95,25	18	43,5	**PHP 6-5V2120-F**
		596,90	C-3	J	599,44	23,60	38,10	114,30	3,18	112,71	117,48	2	51,3	**PHP 6-5V2360-J**
		708,66	C-3	J	711,20	28,00	38,10	114,30	3,18	112,71	117,48	2	67,1	**PHP 6-5V2800-J**
		797,56	C-3	J	800,10	31,50	38,10	114,30	3,18	112,71	117,48	2	83,0	**PHP 6-5V3150-J**
		949,96	C-3	J	952,50	37,50	38,10	114,30	3,18	112,71	117,48	2	98,9	**PHP 6-5V3750-J**
		1267,46	C-3	M	1270,00	50,00	50,80	139,70	27,78	112,71	171,45	31	140,6	**PHP 6-5V5000-M**
5V	**8**	177,80	A-1	SF	180,34	7,10	12,70	74,61	32,54	147,64	52,39	63	11,2	**PHP 8-5V710-SF**
		187,96	A-1	SF	190,50	7,50	12,70	74,61	32,54	147,64	52,39	63	12,8	**PHP 8-5V750-SF**
		200,66	A-1	E	203,20	8,00	22,23	63,50	34,13	147,64	69,85	44	15,9	**PHP 8-5V800-E**
		213,36	A-1	E	215,90	8,50	22,23	63,50	34,13	147,64	69,85	44	16,9	**PHP 8-5V850-E**
		226,06	A-1	E	228,60	9,00	22,23	63,50	34,13	147,64	69,85	44	19,1	**PHP 8-5V900-E**
		232,41	A-1	F	234,95	9,25	25,40	101,60	30,96	147,64	95,25	21	20,0	**PHP 8-5V925-F**
		245,11	A-1	F	247,65	9,75	25,40	101,60	30,96	147,64	95,25	21	22,0	**PHP 8-5V975-F**
		259,08	A-1	F	261,62	10,30	25,40	101,60	30,96	147,64	95,25	21	26,5	**PHP 8-5V1030-F**
		274,32	A-1	F	276,86	10,90	25,40	101,60	30,96	147,64	95,25	21	28,6	**PHP 8-5V1090-F**
		284,48	A-1	F	287,02	11,30	25,40	101,60	30,96	147,64	95,25	21	30,4	**PHP 8-5V1130-F**
		297,18	A-2	F	299,72	11,80	25,40	101,60	30,96	147,64	95,25	21	32,2	**PHP 8-5V1180-F**
		314,96	A-3	F	317,50	12,50	25,40	101,60	30,96	147,64	95,25	21	34,5	**PHP 8-5V1250-F**
		332,74	A-3	F	335,28	13,20	25,40	101,60	30,96	147,64	95,25	21	36,3	**PHP 8-5V1320-F**
		353,06	A-3	F	355,60	14,00	25,40	101,60	30,96	147,64	95,25	21	36,7	**PHP 8-5V1400-F**
		378,46	A-3	F	381,00	15,00	25,40	101,60	30,96	147,64	95,25	21	37,7	**PHP 8-5V1500-F**
		403,86	A-3	F	406,40	16,00	25,40	101,60	30,96	147,64	95,25	21	40,8	**PHP 8-5V1600-F**
		472,44	A-3	J	474,98	18,70	38,10	114,30	3,18	147,64	117,48	27	54,4	**PHP 8-5V1870-J**
		535,94	A-3	J	538,48	21,20	38,10	114,30	3,18	147,64	117,48	27	69,0	**PHP 8-5V2120-J**
		596,90	A-3	J	599,44	23,60	38,10	114,30	3,18	147,64	117,48	27	83,9	**PHP 8-5V2360-J**
		708,66	A-3	J	711,20	28,00	38,10	114,30	3,18	147,64	117,48	27	95,3	**PHP 8-5V2800-J**
		797,56	B-3	M	800,10	31,50	50,80	139,70	8,73	147,64	171,45	33	109,8	**PHP 8-5V3150-M**
		949,96	B-3	M	952,50	37,50	50,80	139,70	8,73	147,64	171,45	33	129,3	**PHP 8-5V3750-M**

* Mass does not include bushings.

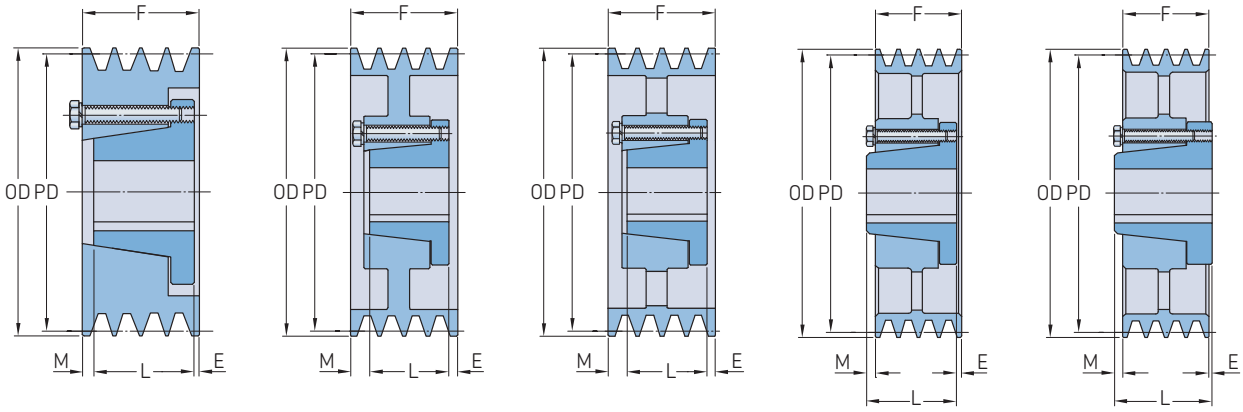

Type A-1 Type A-2 Type A-3 Type B-3 Type C-3

Section	Number of grooves	Pitch diameter PD	Pulley type	Bushing number	Dimensions Outer diameter OD		Bore Min.	Bore Max.	E	F	L	M	Mass*	Designation
–	–	mm	–	–	mm	in.							kg	–
5V	**10**	200,66	A-1	E	203,20	8,00	22,23	88,90	53,18	182,56	69,85	60	17,1	**PHP 10-5V800-E**
		213,36	A-1	E	215,90	8,50	22,23	88,90	53,18	182,56	69,85	60	20,2	**PHP 10-5V850-E**
		226,06	A-1	F	228,60	9,00	25,40	101,60	50,01	182,56	95,25	37	23,3	**PHP 10-5V900-F**
		232,41	A-1	F	234,95	9,25	25,40	101,60	50,01	182,56	95,25	37	24,0	**PHP 10-5V925-F**
		245,11	A-1	F	247,65	9,75	25,40	101,60	50,01	182,56	95,25	37	25,4	**PHP 10-5V975-F**
		259,08	A-1	F	261,62	10,30	25,40	101,60	50,01	182,56	95,25	37	29,0	**PHP 10-5V1030-F**
		274,32	A-1	F	276,86	10,90	25,40	101,60	50,01	182,56	95,25	37	32,7	**PHP 10-5V1090-F**
		284,48	A-1	F	287,02	11,30	25,40	101,60	50,01	182,56	95,25	37	34,9	**PHP 10-5V1130-F**
		297,18	A-2	F	299,72	11,80	25,40	101,60	50,01	182,56	95,25	37	36,7	**PHP 10-5V1180-F**
		314,96	A-2	J	317,50	12,50	38,10	114,30	53,98	182,56	117,48	11	50,8	**PHP 10-5V1250-J**
		332,74	A-2	J	335,28	13,20	38,10	114,30	53,98	182,56	117,48	11	52,6	**PHP 10-5V1320-J**
		353,06	A-3	J	355,60	14,00	38,10	114,30	53,98	182,56	117,48	11	59,0	**PHP 10-5V1400-J**
		378,46	A-3	J	381,00	15,00	38,10	114,30	53,98	182,56	117,48	11	62,6	**PHP 10-5V1500-J**
		403,86	A-3	J	406,40	16,00	38,10	114,30	53,98	182,56	117,48	11	66,2	**PHP 10-5V1600-J**
		472,44	A-3	J	474,98	18,70	38,10	114,30	3,18	182,56	117,48	62	71,2	**PHP 10-5V1870-J**
		535,94	A-3	J	538,48	21,20	38,10	114,30	3,18	182,56	117,48	62	76,2	**PHP 10-5V2120-J**
		596,90	A-3	M	599,44	23,60	50,80	139,70	8,73	182,56	171,45	2	96,6	**PHP 10-5V2360-M**
		708,66	A-3	M	711,20	28,00	50,80	139,70	8,73	182,56	171,45	2	108,9	**PHP 10-5V2800-M**
		797,56	A-3	M	800,10	31,50	50,80	139,70	8,73	182,56	171,45	2	124,7	**PHP 10-5V3150-M**
		949,96	A-3	M	952,50	37,50	50,80	139,70	8,73	182,56	171,45	2	142,9	**PHP 10-5V3750-M**
		1267,46	A-3	M	1270,00	50,00	50,80	139,70	8,73	182,56	171,45	2	207,8	**PHP 10-5V5000-M**
8V	**4**	312,42	D-2	F	317,50	12,50	25,40	101,60	3,97	123,83	95,25	33	34,0	**PHP 4-8V1250-F**
		330,20	D-2	F	335,28	13,20	25,40	101,60	3,97	123,83	95,25	33	36,7	**PHP 4-8V1320-F**
		350,52	D-3	F	355,60	14,00	25,40	101,60	3,97	123,83	95,25	33	39,5	**PHP 4-8V1400-F**
		375,92	D-3	F	381,00	15,00	25,40	101,60	3,97	123,83	95,25	33	41,3	**PHP 4-8V1500-F**
		401,32	D-3	F	406,40	16,00	25,40	101,60	3,97	123,83	95,25	33	43,5	**PHP 4-8V1600-F**
		426,72	D-3	F	431,80	17,00	25,40	101,60	3,97	123,83	95,25	33	47,2	**PHP 4-8V1700-F**
		452,12	D-3	F	457,20	18,00	25,40	101,60	3,97	123,83	95,25	33	51,7	**PHP 4-8V1800-F**
		477,52	D-3	F	482,60	19,00	25,40	101,60	3,97	123,83	95,25	33	54,9	**PHP 4-8V1900-F**
		502,92	D-3	J	508,00	20,00	38,10	114,30	–	123,83	117,48	6	61,7	**PHP 4-8V2000-J**
		533,40	D-3	J	538,48	21,20	38,10	114,30	–	123,83	117,48	6	65,8	**PHP 4-8V2120-J**
		563,88	D-3	J	568,96	22,40	38,10	114,30	–	123,83	117,48	6	69,9	**PHP 4-8V2240-J**
		624,84	C-3	M	629,92	24,80	50,80	139,70	19,84	123,83	171,45	28	79,8	**PHP 4-8V2480-M**
		756,92	C-3	M	762,00	30,00	50,80	139,70	19,84	123,83	171,45	28	101,6	**PHP 4-8V3000-M**
		896,62	C-3	M	901,70	35,50	50,80	139,70	19,84	123,83	171,45	28	121,1	**PHP 4-8V3550-M**
		1010,92	C-3	M	1016,00	40,00	50,80	139,70	19,84	123,83	171,45	28	140,6	**PHP 4-8V4000-M**
		1125,22	C-3	M	1130,30	44,50	50,80	139,70	19,84	123,83	171,45	28	164,7	**PHP 4-8V4450-M**
		1341,12	C-3	M	1346,20	53,00	50,80	139,70	19,84	123,83	171,45	28	198,2	**PHP 4-8V5300-M**
8V	**5**	312,42	A-2	F	317,50	12,50	25,40	101,60	24,61	152,40	95,25	33	37,2	**PHP 5-8V1250-F**
		330,20	A-2	F	335,28	13,20	25,40	101,60	24,61	152,40	95,25	33	40,4	**PHP 5-8V1320-F**
		350,52	A-3	F	355,60	14,00	25,40	101,60	24,61	152,40	95,25	33	44,9	**PHP 5-8V1400-F**
		375,92	A-3	F	381,00	15,00	25,40	101,60	24,61	152,40	95,25	33	46,7	**PHP 5-8V1500-F**
		401,32	A-3	F	406,40	16,00	25,40	101,60	24,61	152,40	95,25	33	50,4	**PHP 5-8V1600-F**
		426,72	A-3	J	431,80	17,00	38,10	114,30	14,29	152,40	117,48	21	54,0	**PHP 5-8V1700-J**
		452,12	A-3	J	457,20	18,00	38,10	114,30	14,29	152,40	117,48	21	59,4	**PHP 5-8V1800-J**
		477,52	A-3	J	482,60	19,00	38,10	114,30	14,29	152,40	117,48	21	64,4	**PHP 5-8V1900-J**
		502,92	A-3	J	508,00	20,00	38,10	114,30	14,29	152,40	117,48	21	68,5	**PHP 5-8V2000-J**
		533,40	A-3	J	538,48	21,20	38,10	114,30	14,29	152,40	117,48	21	75,8	**PHP 5-8V2120-J**
		563,88	B-3	M	568,96	22,40	50,80	139,70	8,73	152,40	171,45	28	80,7	**PHP 5-8V2240-M**
		624,84	B-3	M	629,92	24,80	50,80	139,70	8,73	152,40	171,45	28	91,2	**PHP 5-8V2480-M**
		756,92	B-3	M	762,00	30,00	50,80	139,70	8,73	152,40	171,45	28	110,2	**PHP 5-8V3000-M**
		896,62	B-3	M	901,70	35,50	50,80	139,70	8,73	152,40	171,45	28	126,1	**PHP 5-8V3550-M**
		1010,92	B-3	M	1016,00	40,00	50,80	139,70	8,73	152,40	171,45	28	154,2	**PHP 5-8V4000-M**

* Mass does not include bushings.

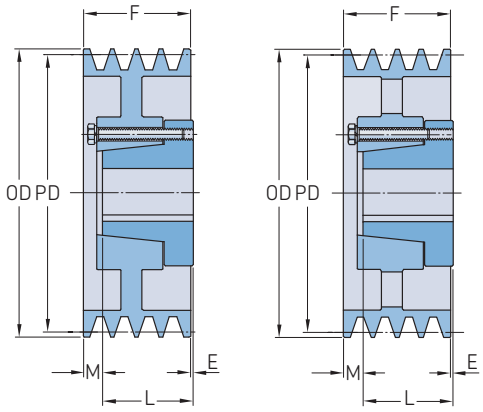

Type D-2 Type D-3

Section	Number of grooves	Pitch diameter PD	Pulley type	Bushing number	Dimensions Outer diameter OD		Bore Min.	Max.	E	F	L	M	Mass*	Designation
–	–	mm	–	–	mm	in.							kg	–
8V	**5**	1125,22	C-3	N	1130,30	44,50	61,91	138,11	28,58	152,40	206,38	25	189,6	**PHP 5-8V4450-N**
		1341,12	C-3	N	1346,20	53,00	61,91	138,11	28,58	152,40	206,38	25	225,0	**PHP 5-8V5300-N**
8V	**6**	312,42	A-2	F	317,50	12,50	25,40	101,60	24,61	180,98	95,25	61	40,8	**PHP 6-8V1250-F**
		330,20	A-2	F	335,28	13,20	25,40	101,60	24,61	180,98	95,25	61	44,5	**PHP 6-8V1320-F**
		350,52	A-3	F	355,60	14,00	25,40	101,60	24,61	180,98	95,25	61	50,8	**PHP 6-8V1400-F**
		375,92	A-2	J	381,00	15,00	38,10	114,30	28,58	180,98	117,48	35	55,8	**PHP 6-8V1500-J**
		401,32	A-3	J	406,40	16,00	38,10	114,30	28,58	180,98	117,48	35	58,5	**PHP 6-8V1600-J**
		426,72	A-3	J	431,80	17,00	38,10	114,30	28,58	180,98	117,48	35	61,7	**PHP 6-8V1700-J**
		452,12	A-3	J	457,20	18,00	38,10	114,30	28,58	180,98	117,48	35	64,9	**PHP 6-8V1800-J**
		477,52	A-3	J	482,60	19,00	38,10	114,30	28,58	180,98	117,48	35	71,2	**PHP 6-8V1900-J**
		502,92	B-3	M	508,00	20,00	50,80	139,70	34,13	180,98	171,45	25	81,2	**PHP 6-8V2000-M**
		533,40	B-3	M	538,48	21,20	50,80	139,70	34,13	180,98	171,45	25	87,5	**PHP 6-8V2120-M**
		563,88	B-3	M	568,96	22,40	50,80	139,70	34,13	180,98	171,45	25	93,0	**PHP 6-8V2240-M**
		624,84	A-3	M	629,92	24,80	50,80	139,70	8,73	180,98	171,45	1	106,6	**PHP 6-8V2480-M**
		756,92	A-3	M	762,00	30,00	50,80	139,70	8,73	180,98	171,45	1	129,3	**PHP 6-8V3000-M**
		896,62	C-3	N	901,70	35,50	61,91	138,11	23,81	180,98	206,38	2	154,2	**PHP 6-8V3550-N**
		1010,92	C-3	N	1016,00	40,00	61,91	138,11	23,81	180,98	206,38	2	178,7	**PHP 6-8V4000-N**
		1125,22	C-3	N	1130,30	44,50	61,91	138,11	23,81	180,98	206,38	2	221,8	**PHP 6-8V4450-N**
		1341,12	C-3	N	1346,20	53,00	61,91	138,11	23,81	180,98	206,38	2	264,9	**PHP 6-8V5300-N**
8V	**8**	312,42	A-1	J	317,50	12,50	38,10	114,30	53,98	238,13	117,48	67	59,4	**PHP 8-8V1250-J**
		330,20	A-1	J	335,28	13,20	38,10	114,30	53,98	238,13	117,48	67	72,6	**PHP 8-8V1320-J**
		350,52	A-2	J	355,60	14,00	38,10	114,30	53,98	238,13	117,48	67	79,4	**PHP 8-8V1400-J**
		375,92	A-2	J	381,00	15,00	38,10	114,30	53,98	238,13	117,48	67	84,4	**PHP 8-8V1500-J**
		401,32	A-2	J	406,40	16,00	38,10	114,30	53,98	238,13	117,48	67	95,3	**PHP 8-8V1600-J**
		426,72	A-2	M	431,80	17,00	50,80	139,70	59,53	238,13	171,45	7	100,2	**PHP 8-8V1700-M**
		452,12	A-2	M	457,20	18,00	50,80	139,70	59,53	238,13	171,45	7	106,6	**PHP 8-8V1800-M**
		477,52	A-3	M	482,60	19,00	50,80	139,70	59,53	238,13	171,45	7	113,4	**PHP 8-8V1900-M**
		502,92	A-3	M	508,00	20,00	50,80	139,70	59,53	238,13	171,45	7	120,2	**PHP 8-8V2000-M**
		533,40	A-3	M	538,48	21,20	50,80	139,70	59,53	238,13	171,45	7	127,0	**PHP 8-8V2120-M**
		563,88	A-3	M	568,96	22,40	50,80	139,70	59,53	238,13	171,45	7	133,8	**PHP 8-8V2240-M**
		624,84	A-2	N	629,92	24,80	61,91	138,11	4,76	238,13	206,38	17	145,2	**PHP 8-8V2480-N**
		756,92	A-3	N	762,00	30,00	61,91	138,11	4,76	238,13	206,38	17	170,1	**PHP 8-8V3000-N**
		896,62	A-3	N	901,70	35,50	61,91	138,11	4,76	238,13	206,38	17	200,5	**PHP 8-8V3550-N**
		1010,92	A-3	N	1016,00	40,00	61,91	138,11	4,76	238,13	206,38	17	240,4	**PHP 8-8V4000-N**
		1125,22	B-3	P	1130,30	44,50	74,61	177,80	6,35	238,13	238,13	6	276,7	**PHP 8-8V4450-P**
		1341,12	B-3	P	1346,20	53,00	74,61	177,80	6,35	238,13	238,13	6	360,6	**PHP 8-8V5300-P**
8V	**10**	312,42	A-1	J	317,50	12,50	38,10	114,30	53,98	295,28	117,48	131	70,3	**PHP 10-8V1250-J**
		330,20	A-1	J	335,28	13,20	38,10	114,30	53,98	295,28	117,48	131	86,2	**PHP 10-8V1320-J**
		350,52	A-1	J	355,60	14,00	38,10	114,30	53,98	295,28	117,48	131	95,3	**PHP 10-8V1400-J**
		375,92	A-1	M	381,00	15,00	50,80	139,70	59,53	295,28	171,45	64	120,7	**PHP 10-8V1500-M**
		401,32	A-2	M	406,40	16,00	50,80	139,70	59,53	295,28	171,45	64	116,1	**PHP 10-8V1600-M**
		426,72	A-1	M	431,80	17,00	50,80	139,70	59,53	295,28	171,45	64	127,5	**PHP 10-8V1700-M**
		452,12	A-2	M	457,20	18,00	50,80	139,70	59,53	295,28	171,45	64	131,5	**PHP 10-8V1800-M**
		477,52	A-2	M	482,60	19,00	50,80	139,70	59,53	295,28	171,45	64	136,5	**PHP 10-8V1900-M**
		502,92	A-2	M	508,00	20,00	50,80	139,70	59,53	295,28	171,45	64	147,4	**PHP 10-8V2000-M**
		533,40	A-2	M	538,48	21,20	50,80	139,70	59,53	295,28	171,45	64	154,2	**PHP 10-8V2120-M**
		563,88	A-2	N	568,96	22,40	61,91	138,11	4,76	295,28	206,38	84	165,6	**PHP 10-8V2240-N**
		624,84	A-2	N	629,92	24,80	61,91	138,11	4,76	295,28	206,38	84	176,9	**PHP 10-8V2480-N**
		756,92	A-3	N	762,00	30,00	61,91	138,11	4,76	295,28	206,38	84	197,3	**PHP 10-8V3000-N**
		896,62	A-2	P	901,70	35,50	74,61	177,80	6,35	295,28	238,13	51	230,0	**PHP 10-8V3550-P**
		1010,92	A-3	P	1016,00	40,00	74,61	177,80	6,35	295,28	238,13	51	279,0	**PHP 10-8V4000-P**
		1125,22	A-2	P	1130,30	44,50	74,61	177,80	6,35	295,28	238,13	51	322,1	**PHP 10-8V4450-P**

* Mass does not include bushings.

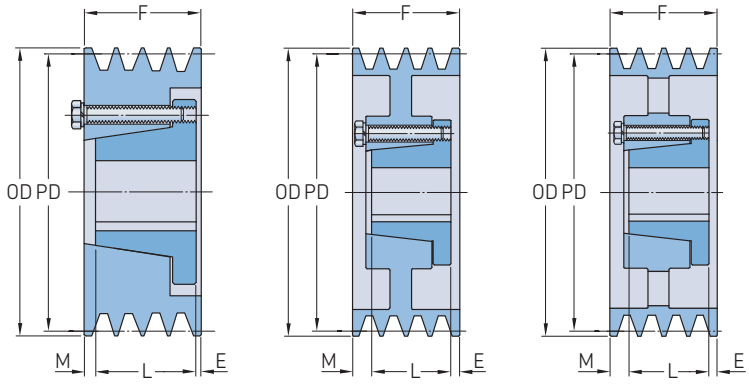

Type A-1 Type A-2 Type A-3

Section	Number of grooves	Pitch diameter PD	Pulley type	Bushing number	Dimensions Outer diameter OD		Bore Min.	Bore Max.	E	F	L	M	Mass*	Designation
–	–	mm	–	–	mm	in.							kg	–
8V	**10**	1341,12	A-3	P	1346,20	53,00	74,61	177,80	6,35	295,28	238,13	51	428,6	**PHP 10-8V5300-P**
8V	**12**	312,42	A-1	M	317,50	12,50	50,80	139,70	59,53	339,73	171,45	121	88,5	**PHP 12-8V1250-M**
		330,20	A-1	M	335,28	13,20	50,80	139,70	59,53	339,73	171,45	121	104,3	**PHP 12-8V1320-M**
		350,52	A-1	M	355,60	14,00	50,80	139,70	59,53	339,73	171,45	121	113,4	**PHP 12-8V1400-M**
		375,92	A-1	M	381,00	15,00	50,80	139,70	59,53	339,73	171,45	121	121,6	**PHP 12-8V1500-M**
		401,32	A-1	M	406,40	16,00	50,80	139,70	59,53	339,73	171,45	121	134,3	**PHP 12-8V1600-M**
		426,72	A-1	M	431,80	17,00	50,80	139,70	59,53	339,73	171,45	121	154,7	**PHP 12-8V1700-M**
		452,12	A-1	M	457,20	18,00	50,80	139,70	59,53	339,73	171,45	121	156,5	**PHP 12-8V1800-M**
		477,52	A-1	N	482,60	19,00	61,91	138,11	4,76	339,73	206,38	141	159,7	**PHP 12-8V1900-N**
		502,92	A-1	N	508,00	20,00	61,91	138,11	4,76	339,73	206,38	141	174,6	**PHP 12-8V2000-N**
		533,40	A-1	N	538,48	21,20	61,91	138,11	4,76	339,73	206,38	141	181,4	**PHP 12-8V2120-N**
		563,88	A-1	N	568,96	22,40	61,91	138,11	4,76	339,73	206,38	141	197,3	**PHP 12-8V2240-N**
		624,84	A-1	N	629,92	24,80	61,91	138,11	4,76	339,73	206,38	141	208,7	**PHP 12-8V2480-N**
		756,92	A-2	P	762,00	30,00	74,61	177,80	6,35	339,73	238,13	108	224,5	**PHP 12-8V3000-P**
		896,62	A-2	P	901,70	35,50	74,61	177,80	6,35	339,73	238,13	108	259,5	**PHP 12-8V3550-P**
		1010,92	A-2	P	1016,00	40,00	74,61	177,80	6,35	339,73	238,13	108	317,5	**PHP 12-8V4000-P**
		1125,22	A-2	P	1130,30	44,50	74,61	177,80	6,35	339,73	238,13	108	374,2	**PHP 12-8V4450-P**
		1341,12	A-2	P	1346,20	53,00	74,61	177,80	6,35	339,73	238,13	108	489,9	**PHP 12-8V5300-P**

* Mass does not include bushings.

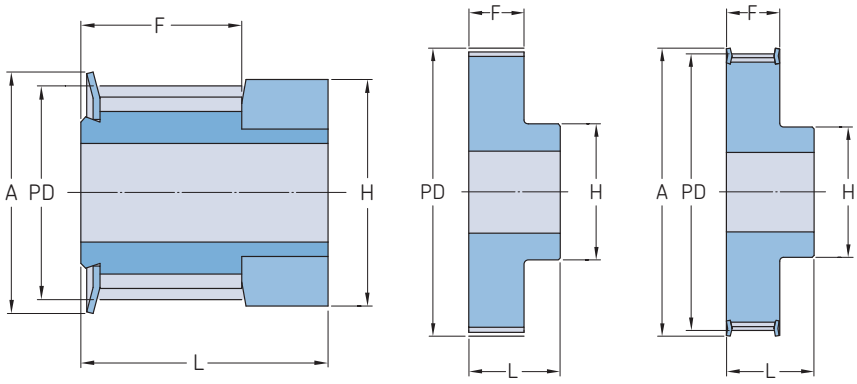

Type 0F Type 1 Type 1F

Pitch	Belt width	Pitch diameter PD	Number of teeth	Pulley type	Dimensions Outer diameter OD	A	B Min.	B Max.	F	K	L	M	H	Mass	Designation
mm			–	–	mm									kg	–
3	**09**	9,55	10	0F	8,79	13,0	–	4,0	10,2	–	17,5	–	13,0	0,04	**PHP 10-3M-09RSB**
		11,46	12	0F	10,70	15,0	–	6,0	10,2	–	17,5	–	15,0	0,06	**PHP 12-3M-09RSB**
		13,37	14	0F	12,61	16,0	–	7,0	10,2	–	17,5	–	16,0	0,07	**PHP 14-3M-09RSB**
		14,32	15	0F	13,56	17,5	–	8,0	10,2	–	17,5	–	17,5	0,08	**PHP 15-3M-09RSB**
		15,28	16	1F	14,52	18,0	4	6,0	12,8	–	20,6	–	10,0	0,07	**PHP 16-3M-09RSB**
		17,19	18	1F	16,43	19,5	6	6,5	12,8	–	20,6	–	11,0	0,08	**PHP 18-3M-09RSB**
		19,10	20	1F	18,34	23,0	6	8,0	12,8	–	20,6	–	13,0	0,01	**PHP 20-3M-09RSB**
		20,05	21	1F	19,29	25,0	6	8,5	12,8	–	20,6	–	14,0	0,01	**PHP 21-3M-09RSB**
		21,01	22	1F	20,25	25,0	6	8,5	12,8	–	20,6	–	14,0	0,01	**PHP 22-3M-09RSB**
		22,92	24	1F	22,16	25,0	6	8,5	12,8	–	20,6	–	14,0	0,02	**PHP 24-3M-09RSB**
		24,83	26	1F	24,07	28,0	6	10,5	12,8	–	20,6	–	16,0	0,02	**PHP 26-3M-09RSB**
		26,74	28	1F	25,98	32,0	6	11,5	12,8	–	20,6	–	18,0	0,02	**PHP 28-3M-09RSB**
		28,65	30	1F	27,89	32,0	6	12,5	12,8	–	20,6	–	20,0	0,03	**PHP 30-3M-09RSB**
		30,56	32	1F	29,80	36,0	6	14,0	12,8	–	20,6	–	22,0	0,03	**PHP 32-3M-09RSB**
		34,38	36	1F	33,62	38,0	6	17,0	13,4	–	22,2	–	26,0	0,05	**PHP 36-3M-09RSB**
		38,20	40	1F	37,44	42,0	6	19,0	13,4	–	22,2	–	28,0	0,06	**PHP 40-3M-09RSB**
		42,02	44	1F	41,26	48,0	6	22,5	13,4	–	22,2	–	33,0	0,07	**PHP 44-3M-09RSB**
		45,84	48	1	45,08	–	8	22,5	13,4	–	22,2	–	33,0	0,07	**PHP 48-3M-09RSB**
		57,30	60	1	56,54	–	8	22,5	13,4	–	22,2	–	33,0	0,11	**PHP 60-3M-09RSB**
		68,75	72	1	67,99	–	8	22,5	13,4	–	22,2	–	33,0	0,14	**PHP 72-3M-09RSB**
3	**15**	9,55	10	0F	8,79	13,0	–	3,0	17,0	–	26,0	–	13,0	0,04	**PHP 10-3M-15RSB**
		11,46	12	0F	10,70	15,0	–	5,0	17,0	–	26,0	–	15,0	0,06	**PHP 12-3M-15RSB**
		13,37	14	0F	12,61	16,0	–	6,0	17,0	–	26,0	–	16,0	0,07	**PHP 14-3M-15RSB**
		14,32	15	0F	13,56	17,5	–	6,0	17,0	–	26,0	–	17,5	0,08	**PHP 15-3M-15RSB**
		15,28	16	1F	14,52	18,0	4	7,0	19,5	–	26,0	–	10,0	0,07	**PHP 16-3M-15RSB**
		17,19	18	1F	16,43	19,5	6	8,0	19,5	–	26,0	–	11,0	0,08	**PHP 18-3M-15RSB**
		19,10	20	1F	18,34	23,0	6	9,0	19,5	–	26,0	–	13,0	0,01	**PHP 20-3M-15RSB**
		20,05	21	1F	19,29	25,0	6	9,0	19,5	–	26,0	–	14,0	0,01	**PHP 21-3M-15RSB**
		21,01	22	1F	20,25	25,0	6	9,0	19,5	–	26,0	–	14,0	0,01	**PHP 22-3M-15RSB**
		22,92	24	1F	22,16	25,0	6	9,0	19,5	–	26,0	–	14,0	0,02	**PHP 24-3M-15RSB**
		24,83	26	1F	24,07	28,0	6	11,0	19,5	–	26,0	–	16,0	0,02	**PHP 26-3M-15RSB**
		26,74	28	1F	25,98	32,0	6	12,0	19,5	–	26,0	–	18,0	0,02	**PHP 28-3M-15RSB**
		28,65	30	1F	27,89	32,0	6	14,0	19,5	–	26,0	–	20,0	0,03	**PHP 30-3M-15RSB**
		30,56	32	1F	29,80	36,0	6	15,0	19,5	–	26,0	–	22,0	0,03	**PHP 32-3M-15RSB**
		34,38	36	1F	33,62	38,0	6	16,0	20,0	–	30,0	–	26,0	0,05	**PHP 36-3M-15RSB**
		38,20	40	1F	37,44	42,0	6	18,0	20,0	–	30,0	–	28,0	0,06	**PHP 40-3M-15RSB**
		42,02	44	1F	41,26	48,0	6	20,0	20,0	–	30,0	–	33,0	0,07	**PHP 44-3M-15RSB**
		45,84	48	1	45,08	–	8	20,0	20,0	–	30,0	–	33,0	0,07	**PHP 48-3M-15RSB**
		57,30	60	1	56,54	–	8	20,0	20,0	–	30,0	–	33,0	0,11	**PHP 60-3M-15RSB**
		68,75	72	1	67,99	–	8	20,0	20,0	–	30,0	–	33,0	0,14	**PHP 72-3M-15RSB**
5	**09**	19,10	12	1F	17,96	25,0	4	8,0	14,5	–	20,0	–	13,0	0,03	**PHP 12-5M-09RSB**
		22,28	14	1F	21,14	25,0	6	9,0	14,5	–	20,0	–	13,0	0,03	**PHP 14-5M-09RSB**
		23,87	15	1F	22,73	28,0	6	11,0	14,5	–	20,0	–	16,0	0,04	**PHP 15-5M-09RSB**
		25,46	16	1F	24,32	28,0	6	11,0	14,5	–	20,0	–	16,0	0,05	**PHP 16-5M-09RSB**
		28,65	18	1F	27,51	32,0	6	13,0	14,5	–	20,0	–	19,0	0,07	**PHP 18-5M-09RSB**
		31,83	20	1F	30,69	36,0	6	14,0	14,5	–	22,5	–	23,0	0,09	**PHP 20-5M-09RSB**
		33,42	21	1F	32,28	38,0	6	15,0	14,5	–	22,5	–	24,0	0,11	**PHP 21-5M-09RSB**
		35,01	22	1F	33,87	38,0	6	16,0	14,5	–	22,5	–	25,5	0,12	**PHP 22-5M-09RSB**
		38,20	24	1F	37,06	42,0	6	18,0	14,5	–	22,5	–	27,0	0,15	**PHP 24-5M-09RSB**
		41,38	26	1F	40,24	44,0	6	20,0	14,5	–	22,5	–	30,0	0,17	**PHP 26-5M-09RSB**
		44,56	28	1F	43,42	48,0	6	20,0	14,5	–	22,5	–	30,5	0,20	**PHP 28-5M-09RSB**
		47,75	30	1F	46,60	51,0	6	24,0	14,5	–	22,5	–	35,0	0,24	**PHP 30-5M-09RSB**
		50,93	32	1F	49,79	54,0	8	26,0	14,5	–	22,5	–	38,0	0,27	**PHP 32-5M-09RSB**
		57,30	36	1F	56,16	60,0	8	26,0	14,5	–	22,5	–	38,0	0,32	**PHP 36-5M-09RSB**

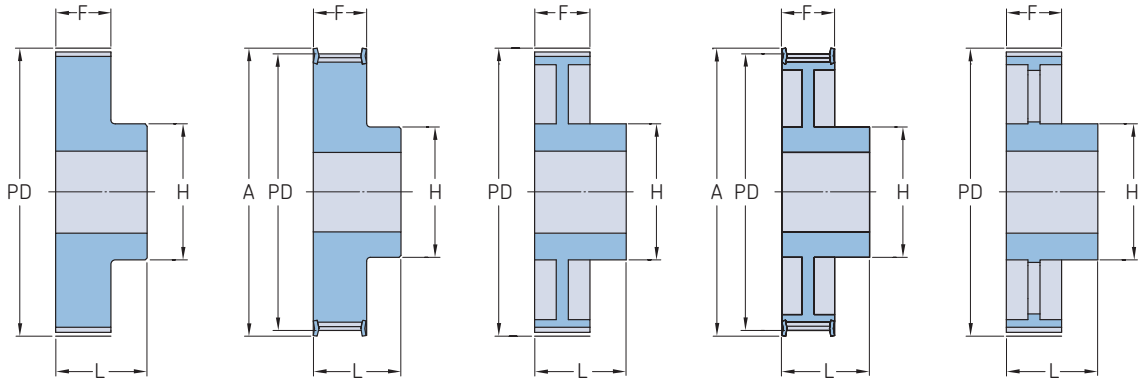

Type 1 Type 1F Type 2 Type 2F Type 5

Pitch	Belt width	Pitch diameter PD	Number of teeth	Pulley type	Dimensions Outer diameter OD	A	B Min.	B Max.	F	K	L	M	H	Mass	Designation
mm			–	–	mm									kg	–
5	**09**	63,66	40	1F	62,52	71,0	8	26,0	14,5	–	22,5	–	38,0	0,40	**PHP 40-5M-09RSB**
		70,03	44	2	68,89	–	8	26,0	14,5	–	25,5	–	38,0	0,17	**PHP 44-5M-09RSB**
		76,39	48	2	75,25	–	8	26,0	14,5	–	25,5	–	38,0	0,18	**PHP 48-5M-09RSB**
		95,49	60	2	94,35	–	8	30,0	14,5	–	25,5	–	45,0	0,23	**PHP 60-5M-09RSB**
		114,59	72	2	113,45	–	8	30,0	14,5	–	25,5	–	45,0	0,27	**PHP 72-5M-09RSB**
5	**15**	19,10	12	1F	17,96	25,0	4	8,0	20,5	–	26,0	–	13,0	0,03	**PHP 12-5M-15RSB**
		22,28	14	1F	21,14	25,0	6	9,0	20,5	–	26,0	–	13,0	0,05	**PHP 14-5M-15RSB**
		23,87	15	1F	22,73	28,0	6	11,0	20,5	–	26,0	–	16,0	0,06	**PHP 15-5M-15RSB**
		25,46	16	1F	24,32	28,0	6	11,0	20,5	–	26,0	–	16,0	0,06	**PHP 16-5M-15RSB**
		28,65	18	1F	27,51	32,0	6	13,0	20,5	–	26,0	–	19,0	0,09	**PHP 18-5M-15RSB**
		31,83	20	1F	30,69	36,0	6	14,0	20,5	–	26,0	–	23,0	0,11	**PHP 20-5M-15RSB**
		33,42	21	1F	32,28	38,0	6	15,0	20,5	–	26,0	–	24,0	0,13	**PHP 21-5M-15RSB**
		35,01	22	1F	33,87	38,0	6	16,0	20,5	–	26,0	–	25,5	0,14	**PHP 22-5M-15RSB**
		38,20	24	1F	37,06	42,0	6	18,0	20,5	–	28,0	–	27,0	0,18	**PHP 24-5M-15RSB**
		41,38	26	1F	40,24	44,0	6	20,0	20,5	–	28,0	–	30,0	0,22	**PHP 26-5M-15RSB**
		44,56	28	1F	43,42	48,0	6	20,0	20,5	–	28,0	–	30,5	0,25	**PHP 28-5M-15RSB**
		47,75	30	1F	46,60	51,0	6	24,0	20,5	–	28,0	–	35,0	0,30	**PHP 30-5M-15RSB**
		50,93	32	1F	49,79	54,0	8	26,0	20,5	–	28,0	–	38,0	0,35	**PHP 32-5M-15RSB**
		57,30	36	1F	56,16	60,0	8	26,0	20,5	–	28,0	–	38,0	0,52	**PHP 36-5M-15RSB**
		63,66	40	1F	62,52	71,0	8	26,0	20,5	–	28,0	–	38,0	0,43	**PHP 40-5M-15RSB**
		70,03	44	2	68,89	–	8	26,0	20,5	–	30,0	–	38,0	0,23	**PHP 44-5M-15RSB**
		76,39	48	2	75,25	–	8	26,0	20,5	–	30,0	–	38,0	0,19	**PHP 48-5M-15RSB**
		95,49	60	2	94,35	–	8	34,0	20,5	–	30,0	–	50,0	0,31	**PHP 60-5M-15RSB**
		114,59	72	2	113,45	–	8	34,0	20,5	–	30,0	–	50,0	0,38	**PHP 72-5M-15RSB**
5	**25**	19,10	12	1F	17,96	25,0	4	8,0	30,5	–	36,0	5,5	13,0	0,05	**PHP 12-5M-25RSB**
		22,28	14	1F	21,14	25,0	6	9,0	30,5	–	36,0	5,5	13,0	0,07	**PHP 14-5M-25RSB**
		23,87	15	1F	22,73	28,0	6	11,0	30,5	–	36,0	5,5	16,0	0,08	**PHP 15-5M-25RSB**
		25,46	16	1F	24,32	28,0	6	11,0	30,5	–	36,0	5,5	16,0	0,10	**PHP 16-5M-25RSB**
		28,65	18	1F	27,51	32,0	6	13,0	30,5	–	36,0	5,5	19,0	0,12	**PHP 18-5M-25RSB**
		31,83	20	1F	30,69	36,0	6	14,0	30,5	–	36,0	5,5	23,0	0,16	**PHP 20-5M-25RSB**
		33,42	21	1F	32,28	38,0	6	15,0	30,5	–	38,0	7,5	24,0	0,19	**PHP 21-5M-25RSB**
		35,01	22	1F	33,87	38,0	6	16,0	30,5	–	38,0	7,5	25,5	0,21	**PHP 22-5M-25RSB**
		38,20	24	1F	37,06	42,0	6	18,0	30,5	–	38,0	7,5	27,0	0,25	**PHP 24-5M-25RSB**
		41,38	26	1F	40,24	44,0	6	20,0	30,5	–	38,0	7,5	30,0	0,30	**PHP 26-5M-25RSB**
		44,56	28	1F	43,42	48,0	6	20,0	30,5	–	38,0	7,5	30,5	0,35	**PHP 28-5M-25RSB**
		47,75	30	1F	46,60	51,0	6	24,0	30,5	–	38,0	7,5	35,0	0,42	**PHP 30-5M-25RSB**
		50,93	32	1F	49,79	54,0	8	26,0	30,5	–	38,0	7,5	38,0	0,48	**PHP 32-5M-25RSB**
		57,30	36	1F	56,16	60,0	8	26,0	30,5	–	38,0	7,5	38,0	0,59	**PHP 36-5M-25RSB**
		63,66	40	1F	62,52	71,0	8	26,0	30,5	–	38,0	7,5	38,0	0,74	**PHP 40-5M-25RSB**
		70,03	44	2	68,89	–	8	26,0	30,5	–	40,0	9,5	38,0	0,32	**PHP 44-5M-25RSB**
		76,39	48	2	72,25	–	8	26,0	30,5	–	40,0	9,5	38,0	0,28	**PHP 48-5M-25RSB**
		95,49	60	2	94,35	–	8	34,0	30,5	–	40,0	9,5	50,0	0,44	**PHP 60-5M-25RSB**
		114,59	72	2	113,45	–	8	34,0	30,5	–	40,0	9,5	50,0	0,53	**PHP 72-5M-25RSB**
		127,32	80	1	126,18	–	8	62,0	30,5	–	40,0	–	92,0	0,60	**PHP 80-5M-25RSB**
8	**20**	50,93	20	1F	49,56	60,0	12	25,0	28,0	–	38,0	–	38,0	0,43	**PHP 20-8M-20RSB**
		53,47	21	1F	52,10	62,0	12	27,0	28,0	–	38,0	–	40,0	0,49	**PHP 21-8M-20RSB**
		56,02	22	1F	54,65	65,0	12	29,0	28,0	–	38,0	–	43,0	0,54	**PHP 22-8M-20RSB**
		58,57	23	1F	57,20	65,0	12	29,0	28,0	–	38,0	–	45,0	0,60	**PHP 23-8M-20RSB**
		61,12	24	1F	59,75	70,0	12	30,0	28,0	–	38,0	–	45,0	0,65	**PHP 24-8M-20RSB**
		63,66	25	1F	62,28	71,0	12	31,0	28,0	–	38,0	–	45,0	0,73	**PHP 25-8M-20RSB**
		66,21	26	1F	64,84	75,0	12	32,0	28,0	–	38,0	–	50,0	0,80	**PHP 26-8M-20RSB**
		68,75	27	1F	67,39	75,0	12	33,0	28,0	–	38,0	–	50,0	0,84	**PHP 27-8M-20RSB**
		71,30	28	1F	70,08	80,0	15	34,0	28,0	–	38,0	–	50,0	0,87	**PHP 28-8M-20RSB**
		73,85	29	1F	72,62	85,0	15	35,0	28,0	–	38,0	–	55,0	0,95	**PHP 29-8M-20RSB**

Pitch	Belt width	Pitch diameter	Number of teeth	Pulley type	Dimensions Outer diameter									Mass	Designation
		PD			OD	A	B Min.	Max.	F	K	L	M	H		
mm			–	–	mm									kg	–
8	**20**	76,39	30	1F	75,13	85,0	15	36,0	28,0	–	38,0	–	55,0	1,02	**PHP 30-8M-20RSB**
		78,94	31	1F	77,65	87,0	15	38,0	28,0	–	38,0	–	55,0	1,11	**PHP 31-8M-20RSB**
		81,49	32	1F	80,16	90,0	15	40,0	28,0	–	38,0	–	60,0	1,20	**PHP 32-8M-20RSB**
		84,03	33	1F	82,68	90,0	15	42,0	28,0	–	38,0	–	60,0	1,30	**PHP 33-8M-20RSB**
		86,58	34	1F	85,22	95,0	15	44,0	28,0	–	38,0	–	70,0	1,40	**PHP 34-8M-20RSB**
		89,13	35	1F	87,76	95,0	15	45,0	28,0	–	38,0	–	70,0	1,48	**PHP 35-8M-20RSB**
		91,67	36	1F	90,30	100,0	15	46,0	28,0	–	38,0	–	70,0	1,55	**PHP 36-8M-20RSB**
		96,77	38	1F	95,39	105,0	15	50,0	28,0	–	38,0	–	75,0	1,65	**PHP 38-8M-20RSB**
		101,86	40	1F	100,49	110,0	15	50,0	28,0	–	38,0	–	75,0	1,74	**PHP 40-8M-20RSB**
		106,95	42	1F	105,58	111,0	15	50,0	28,0	–	38,0	–	75,0	1,92	**PHP 42-8M-20RSB**
		112,05	44	1F	110,67	121,0	15	50,0	28,0	–	38,0	–	75,0	2,10	**PHP 44-8M-20RSB**
		114,59	45	1F	113,22	121,0	15	50,0	28,0	–	38,0	–	75,0	2,19	**PHP 45-8M-20RSB**
		122,23	48	1F	120,86	131,0	15	54,0	28,0	–	38,0	–	75,0	2,44	**PHP 48-8M-20RSB**
		127,32	50	1F	125,95	131,0	15	54,0	28,0	–	38,0	–	75,0	2,48	**PHP 50-8M-20RSB**
		132,42	52	1F	131,05	140,0	15	54,0	28,0	–	38,0	–	80,0	2,52	**PHP 52-8M-20RSB**
		142,60	56	2F	141,23	151,0	15	54,0	28,0	–	38,0	–	80,0	2,60	**PHP 56-8M-20RSB**
		162,97	64	2F	161,60	172,0	15	54,0	28,0	–	38,0	–	80,0	2,90	**PHP 64-8M-20RSB**
		183,35	72	2F	181,97	192,0	15	54,0	28,0	–	38,0	–	80,0	3,10	**PHP 72-8M-20RSB**
		203,72	80	2	202,35	–	15	54,0	28,0	–	38,0	–	90,0	3,80	**PHP 80-8M-20RSB**
		229,18	90	2	227,81	–	15	54,0	28,0	–	38,0	–	90,0	4,20	**PHP 90-8M-20RSB**
		285,21	112	5	283,83	–	18	54,0	28,0	–	38,0	–	90,0	5,20	**PHP 112-8M-20RSB**
		366,69	144	5	365,32	–	20	54,0	28,0	–	38,0	–	90,0	7,50	**PHP 144-8M-20RSB**
		427,81	168	5	426,44	–	20	60,0	28,0	–	38,0	–	100,0	10,00	**PHP 168-8M-20RSB**
		488,92	192	5	487,55	–	20	60,0	28,0	–	38,0	–	100,0	14,40	**PHP 192-8M-20RSB**
8	**30**	50,93	20	1F	49,56	60,0	12	25,0	38,0	–	48,0	–	38,0	0,54	**PHP 20-8M-30RSB**
		53,47	21	1F	52,10	62,0	12	27,0	38,0	–	48,0	–	40,0	0,62	**PHP 21-8M-30RSB**
		56,02	22	1F	54,65	65,0	12	29,0	38,0	–	48,0	–	43,0	0,69	**PHP 22-8M-30RSB**
		57,57	23	1F	57,20	65,0	12	30,0	38,0	–	48,0	–	45,0	0,77	**PHP 23-8M-30RSB**
		61,12	24	1F	59,75	70,0	12	30,0	38,0	–	48,0	–	45,0	0,84	**PHP 24-8M-30RSB**
		63,66	25	1F	62,28	71,0	12	31,0	38,0	–	48,0	–	50,0	0,92	**PHP 25-8M-30RSB**
		66,21	26	1F	64,84	75,0	12	32,0	38,0	–	48,0	–	50,0	1,00	**PHP 26-8M-30RSB**
		68,75	27	1F	67,39	75,0	12	33,0	38,0	–	48,0	–	50,0	1,06	**PHP 27-8M-30RSB**
		71,30	28	1F	70,08	80,0	15	34,0	38,0	–	48,0	–	50,0	1,12	**PHP 28-8M-30RSB**
		76,39	30	1F	75,13	85,0	15	36,0	38,0	–	48,0	–	55,0	1,32	**PHP 30-8M-30RSB**
		78,94	31	1F	77,65	87,0	15	38,0	38,0	–	48,0	–	55,0	1,42	**PHP 31-8M-30RSB**
		81,49	32	1F	80,16	90,0	15	40,0	38,0	–	48,0	–	60,0	1,53	**PHP 32-8M-30RSB**
		84,03	33	1F	82,68	90,0	15	42,0	38,0	–	48,0	–	60,0	1,64	**PHP 33-8M-30RSB**
		86,58	34	1F	85,22	95,0	15	44,0	38,0	–	48,0	–	70,0	1,80	**PHP 34-8M-30RSB**
		89,13	35	1F	87,76	95,0	15	45,0	38,0	–	48,0	–	70,0	1,90	**PHP 35-8M-30RSB**
		91,67	36	1F	90,30	100,0	15	46,0	38,0	–	48,0	–	70,0	1,99	**PHP 36-8M-30RSB**
		96,77	38	1F	95,39	105,0	15	50,0	38,0	–	48,0	–	75,0	2,27	**PHP 38-8M-30RSB**
		101,86	40	1F	100,49	110,0	15	50,0	38,0	–	48,0	–	75,0	2,40	**PHP 40-8M-30RSB**
		106,95	42	1F	105,58	111,0	15	50,0	38,0	–	48,0	–	75,0	2,60	**PHP 42-8M-30RSB**
		112,05	44	1F	110,67	121,0	15	50,0	38,0	–	48,0	–	75,0	2,80	**PHP 44-8M-30RSB**
		114,59	45	1F	113,22	121,0	15	50,0	38,0	–	48,0	–	75,0	2,90	**PHP 45-8M-30RSB**
		122,23	48	1F	120,86	131,0	15	50,0	38,0	–	48,0	–	75,0	3,20	**PHP 48-8M-30RSB**
		127,32	50	1F	125,95	131,0	15	50,0	38,0	–	48,0	–	75,0	3,30	**PHP 50-8M-30RSB**
		132,42	52	1F	131,05	140,0	15	60,0	38,0	–	48,0	–	90,0	3,40	**PHP 52-8M-30RSB**
		142,60	56	2F	141,23	151,0	15	60,0	38,0	–	48,0	–	90,0	3,60	**PHP 56-8M-30RSB**
		152,79	60	2F	151,42	168,0	15	60,0	38,0	–	48,0	–	90,0	3,95	**PHP 60-8M-30RSB**
		162,97	64	2F	161,60	172,0	15	60,0	38,0	–	48,0	–	90,0	4,30	**PHP 64-8M-30RSB**
		183,35	72	2F	181,97	192,0	15	63,0	38,0	–	48,0	–	95,0	4,80	**PHP 72-8M-30RSB**
		203,72	80	2	202,35	–	15	60,0	38,0	–	48,0	–	100,0	5,10	**PHP 80-8M-30RSB**
		229,18	90	2	227,81	–	15	60,0	38,0	–	48,0	–	100,0	5,70	**PHP 90-8M-30RSB**
		285,21	112	5	283,83	–	18	60,0	38,0	–	48,0	–	100,0	6,80	**PHP 112-8M-30RSB**
		366,69	144	5	365,32	–	20	60,0	38,0	–	48,0	–	100,0	9,30	**PHP 144-8M-30RSB**
		427,81	168	5	426,44	–	20	60,0	38,0	–	48,0	–	100,0	11,40	**PHP 168-8M-30RSB**
		488,92	192	5	487,55	–	20	60,0	38,0	–	48,0	–	100,0	16,00	**PHP 192-8M-30RSB**
8	**50**	56,02	22	1F	54,65	65,0	12	29,0	60,0	–	70,0	–	43,0	1,00	**PHP 22-8M-50RSB**
		58,57	23	1F	57,20	65,0	12	30,0	60,0	–	70,0	–	45,0	1,12	**PHP 23-8M-50RSB**
		61,12	24	1F	59,75	70,0	12	30,0	60,0	–	70,0	–	45,0	1,23	**PHP 24-8M-50RSB**
		63,66	25	1F	62,28	70,0	12	34,0	60,0	–	70,0	–	50,0	1,37	**PHP 25-8M-50RSB**
		66,21	26	1F	64,84	75,0	12	34,0	60,0	–	70,0	–	50,0	1,50	**PHP 26-8M-50RSB**
		68,75	27	1F	67,39	75,0	15	34,0	60,0	–	70,0	–	50,0	1,59	**PHP 27-8M-50RSB**
		71,30	28	1F	70,08	80,0	15	34,0	60,0	–	70,0	–	50,0	1,67	**PHP 28-8M-50RSB**
		76,39	30	1F	75,13	85,0	15	38,0	60,0	–	70,0	–	55,0	1,97	**PHP 30-8M-50RSB**
		78,94	31	1F	77,65	87,0	15	38,0	60,0	–	70,0	–	55,0	2,12	**PHP 31-8M-50RSB**
		81,49	32	1F	80,16	90,0	15	40,0	60,0	–	70,0	–	60,0	2,27	**PHP 32-8M-50RSB**
		84,03	33	1F	82,68	90,0	15	42,0	60,0	–	70,0	–	60,0	2,42	**PHP 33-8M-50RSB**
		86,58	34	1F	85,22	95,0	15	44,0	60,0	–	70,0	–	70,0	2,69	**PHP 34-8M-50RSB**
		89,13	35	1F	87,76	95,0	15	45,0	60,0	–	70,0	–	70,0	2,83	**PHP 35-8M-50RSB**
		91,67	36	1F	90,30	100,0	15	46,0	60,0	–	70,0	–	70,0	2,97	**PHP 36-8M-50RSB**
		96,77	38	1F	95,39	105,0	15	50,0	60,0	–	70,0	–	75,0	3,23	**PHP 38-8M-50RSB**

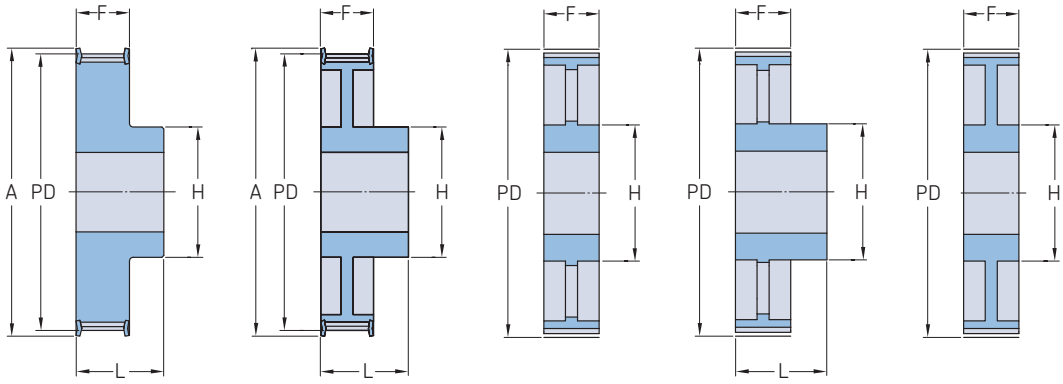

Type 1F Type 2F Type 3 Type 5 Type 7

Pitch	Belt width	Pitch diameter	Number of teeth	Pulley type	Dimensions Outer diameter									Mass	Designation
		PD			OD	A	B Min.	Max.	F	K	L	M	H		
mm			–	–	mm									kg	–
8	**50**	101,86	40	1F	100,49	110,0	18	50,0	60,0	–	70,0	–	75,0	3,50	**PHP 40-8M-50RSB**
		104,41	42	1F	103,03	111,0	18	50,0	60,0	–	70,0	–	75,0	3,70	**PHP 42-8M-50RSB**
		112,05	44	1F	110,67	121,0	18	50,0	60,0	–	70,0	–	75,0	3,90	**PHP 44-8M-50RSB**
		114,59	45	1F	113,22	121,0	18	50,0	60,0	–	70,0	–	75,0	4,00	**PHP 45-8M-50RSB**
		122,23	48	1F	120,86	131,0	18	54,0	60,0	–	70,0	–	80,0	4,30	**PHP 48-8M-50RSB**
		124,78	50	1F	123,41	131,0	18	54,0	60,0	–	70,0	–	80,0	4,48	**PHP 50-8M-50RSB**
		127,32	52	1F	125,95	140,0	18	60,0	60,0	–	70,0	–	90,0	4,65	**PHP 52-8M-50RSB**
		142,60	56	7F	141,23	151,0	18	60,0	60,0	–	60,0	–	90,0	5,00	**PHP 56-8M-50RSB**
		152,79	60	7F	151,42	158,0	18	60,0	60,0	–	60,0	–	90,0	5,30	**PHP 60-8M-50RSB**
		162,97	64	7F	161,60	171,0	18	60,0	60,0	–	60,0	–	100,0	5,60	**PHP 64-8M-50RSB**
		183,35	72	7F	181,97	192,0	18	63,0	60,0	–	60,0	–	100,0	6,80	**PHP 72-8M-50RSB**
		203,72	80	7	202,35	–	18	60,0	60,0	–	60,0	–	110,0	6,90	**PHP 80-8M-50RSB**
		229,18	90	7	227,81	–	18	60,0	60,0	–	60,0	–	110,0	8,60	**PHP 90-8M-50RSB**
		285,21	112	3	283,83	–	20	60,0	60,0	–	60,0	–	110,0	9,60	**PHP 112-8M-50RSB**
		366,69	144	3	365,32	–	20	60,0	60,0	–	60,0	–	110,0	13,80	**PHP 144-8M-50RSB**
		427,81	168	3	426,44	–	20	60,0	60,0	–	60,0	–	120,0	16,00	**PHP 168-8M-50RSB**
		488,92	192	3	487,55	–	20	60,0	60,0	–	60,0	–	130,0	22,40	**PHP 192-8M-50RSB**
8	**85**	56,02	22	1F	54,65	65,0	12	29,0	95,0	–	105,0	–	43,0	1,55	**PHP 22-8M-85RSB**
		58,57	23	1F	57,20	65,0	12	30,0	95,0	–	105,0	–	45,0	1,73	**PHP 23-8M-85RSB**
		61,12	24	1F	59,75	70,0	12	30,0	95,0	–	105,0	–	45,0	1,90	**PHP 24-8M-85RSB**
		63,66	25	1F	62,28	70,0	12	34,0	95,0	–	105,0	–	50,0	2,08	**PHP 25-8M-85RSB**
		66,21	26	1F	64,84	75,0	12	34,0	95,0	–	105,0	–	50,0	2,25	**PHP 26-8M-85RSB**
		68,75	27	1F	67,39	75,0	12	34,0	95,0	–	105,0	–	50,0	2,40	**PHP 27-8M-85RSB**
		71,30	28	1F	70,08	80,0	15	34,0	95,0	–	105,0	–	50,0	2,55	**PHP 28-8M-85RSB**
		76,39	30	1F	75,13	85,0	15	35,0	95,0	–	105,0	–	55,0	3,00	**PHP 30-8M-85RSB**
		78,94	31	1F	77,65	87,0	15	38,0	95,0	–	105,0	–	55,0	3,23	**PHP 31-8M-85RSB**
		81,49	32	1F	80,16	90,0	15	42,0	95,0	–	105,0	–	60,0	3,57	**PHP 32-8M-85RSB**
		84,03	33	1F	82,68	90,0	15	44,0	95,0	–	105,0	–	60,0	3,75	**PHP 33-8M-85RSB**
		86,58	34	1F	85,22	95,0	15	44,0	95,0	–	105,0	–	70,0	4,00	**PHP 34-8M-85RSB**
		89,13	35	1F	87,76	95,0	15	44,0	95,0	–	105,0	–	70,0	4,25	**PHP 35-8M-85RSB**
		91,67	36	1F	90,30	100,0	15	44,0	95,0	–	105,0	–	70,0	4,50	**PHP 36-8M-85RSB**
		96,77	38	1F	95,39	106,0	15	50,0	95,0	–	105,0	–	75,0	4,90	**PHP 38-8M-85RSB**
		101,86	40	1F	100,49	110,0	18	50,0	95,0	–	105,0	–	75,0	5,20	**PHP 40-8M-85RSB**
		106,95	42	1F	105,58	110,0	18	50,0	95,0	–	105,0	–	75,0	6,08	**PHP 42-8M-85RSB**
		112,05	44	1F	110,67	121,0	18	50,0	95,0	–	105,0	–	75,0	6,60	**PHP 44-8M-85RSB**
		114,59	45	1F	113,22	121,0	18	50,0	95,0	–	105,0	–	75,0	6,85	**PHP 45-8M-85RSB**
		122,23	48	1F	120,86	131,0	18	54,0	95,0	–	105,0	–	80,0	7,60	**PHP 48-8M-85RSB**
		127,32	50	1F	125,95	131,0	20	54,0	95,0	–	105,0	–	80,0	8,15	**PHP 50-8M-85RSB**
		132,42	52	1F	131,05	140,0	20	54,0	95,0	–	105,0	–	80,0	8,70	**PHP 52-8M-85RSB**
		142,60	56	1F	141,23	151,0	20	54,0	95,0	–	105,0	–	80,0	9,80	**PHP 56-8M-85RSB**
		152,79	60	7F	151,42	158,0	20	66,0	95,0	–	95,0	–	100,0	10,10	**PHP 60-8M-85RSB**
		162,97	64	7F	161,60	171,0	20	66,0	95,0	–	95,0	–	100,0	10,40	**PHP 64-8M-85RSB**
		183,35	72	7F	181,97	192,0	20	66,0	95,0	–	95,0	–	110,0	11,40	**PHP 72-8M-85RSB**
		203,72	80	3	202,35	–	20	66,0	95,0	–	95,0	–	110,0	11,10	**PHP 80-8M-85RSB**
		229,18	90	3	227,81	–	20	66,0	95,0	–	95,0	–	110,0	13,20	**PHP 90-8M-85RSB**
		285,21	112	3	283,83	–	24	66,0	95,0	–	95,0	–	110,0	16,30	**PHP 112-8M-85RSB**
		366,69	144	3	365,32	–	24	72,0	95,0	–	95,0	–	120,0	21,50	**PHP 144-8M-85RSB**
		427,81	168	3	426,44	–	24	72,0	95,0	–	95,0	–	120,0	26,10	**PHP 168-8M-85RSB**
		488,92	192	3	487,55	–	24	78,0	95,0	–	95,0	–	130,0	30,60	**PHP 192-8M-85RSB**
14	**40**	124,78	28	1F	122,12	127,0	24	67,0	54,0	–	69,0	–	100,0	4,73	**PHP 28-14M-40RSB**
		129,23	29	1F	126,57	138,0	24	67,0	54,0	–	69,0	–	100,0	5,09	**PHP 29-14M-40RSB**
		133,69	30	1F	130,99	138,0	24	67,0	54,0	–	69,0	–	100,0	5,45	**PHP 30-14M-40RSB**
		142,60	32	1F	139,88	154,0	24	67,0	54,0	–	69,0	–	100,0	6,17	**PHP 32-14M-40RSB**

HiTD pulleys
14 mm pitch pilot bore (RSB)

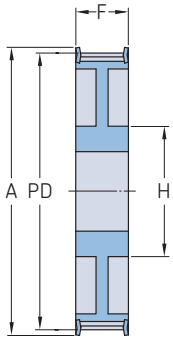

Type 7F

Pitch	Belt width	Pitch diameter	Number of teeth	Pulley type	Dimensions Outer diameter									Mass	Designation
		PD			OD	A	B Min.	Max.	F	K	L	M	H		
mm			–	–	mm									kg	–
14	**40**	151,52	34	1F	148,79	160,0	24	67,0	54,0	–	69,0	–	100,0	6,88	**PHP 34-14M-40RSB**
		160,43	36	1F	157,68	168,0	24	67,0	54,0	–	69,0	–	100,0	7,60	**PHP 36-14M-40RSB**
		169,34	38	1F	166,60	183,0	24	80,0	54,0	–	69,0	–	120,0	8,28	**PHP 38-14M-40RSB**
		178,25	40	1F	175,49	188,0	24	80,0	54,0	–	69,0	–	120,0	9,26	**PHP 40-14M-40RSB**
		196,08	44	1F	193,28	211,0	24	80,0	54,0	–	69,0	–	120,0	10,32	**PHP 44-14M-40RSB**
		213,90	48	2F	211,11	226,0	24	82,0	54,0	–	69,0	–	135,0	11,50	**PHP 48-14M-40RSB**
		249,55	56	2F	246,76	256,0	28	82,0	54,0	–	69,0	–	135,0	13,05	**PHP 56-14M-40RSB**
		285,21	64	2F	282,41	296,0	28	82,0	54,0	–	69,0	–	135,0	14,40	**PHP 64-14M-40RSB**
		320,86	72	5	318,06	–	28	82,0	54,0	–	69,0	–	135,0	16,90	**PHP 72-14M-40RSB**
		356,51	80	5	353,71	–	28	82,0	54,0	–	69,0	–	135,0	18,50	**PHP 80-14M-40RSB**
		401,07	90	5	398,28	–	28	82,0	54,0	–	69,0	–	135,0	20,00	**PHP 90-14M-40RSB**
		499,11	112	5	496,32	–	28	82,0	54,0	–	69,0	–	135,0	26,70	**PHP 112-14M-40RSB**
		641,71	144	5	638,92	–	28	82,0	54,0	–	69,0	–	135,0	35,00	**PHP 144-14M-40RSB**
		748,66	168	5	745,87	–	28	82,0	54,0	–	69,0	–	135,0	44,20	**PHP 168-14M-40RSB**
		855,92	192	5	852,82	–	28	82,0	54,0	–	69,0	–	135,0	52,20	**PHP 192-14M-40RSB**
		962,57	216	5	959,76	–	28	90,0	54,0	–	69,0	–	150,0	60,00	**PHP 216-14M-40RSB**
14	**55**	124,78	28	1F	122,12	127,0	24	67,0	70,0	–	85,0	–	100,0	5,60	**PHP 28-14M-55RSB**
		129,23	29	1F	126,57	138,0	24	67,0	70,0	–	85,0	–	100,0	6,10	**PHP 29-14M-55RSB**
		133,69	30	1F	130,99	138,0	24	67,0	70,0	–	85,0	–	100,0	6,60	**PHP 30-14M-55RSB**
		142,60	32	1F	139,88	154,0	24	67,0	70,0	–	85,0	–	100,0	7,60	**PHP 32-14M-55RSB**
		151,52	34	1F	148,79	160,0	24	67,0	70,0	–	85,0	–	100,0	8,60	**PHP 34-14M-55RSB**
		160,43	36	1F	157,68	168,0	24	67,0	70,0	–	85,0	–	100,0	9,60	**PHP 36-14M-55RSB**
		169,34	38	1F	166,60	183,0	24	80,0	70,0	–	85,0	–	120,0	10,80	**PHP 38-14M-55RSB**
		178,25	40	1F	175,49	188,0	24	80,0	70,0	–	85,0	–	120,0	11,20	**PHP 40-14M-55RSB**
		196,08	44	1F	193,28	211,0	24	80,0	70,0	–	85,0	–	120,0	12,50	**PHP 44-14M-55RSB**
		213,90	48	7F	211,11	226,0	24	82,0	70,0	–	70,0	–	135,0	13,70	**PHP 48-14M-55RSB**
		249,55	56	7F	246,76	256,0	28	82,0	70,0	–	70,0	–	135,0	14,50	**PHP 56-14M-55RSB**
		285,21	64	7F	282,41	296,0	28	82,0	70,0	–	70,0	–	135,0	15,60	**PHP 64-14M-55RSB**
		320,86	72	3	318,06	–	28	82,0	70,0	–	70,0	–	135,0	18,50	**PHP 72-14M-55RSB**
		356,51	80	3	353,71	–	28	82,0	70,0	–	70,0	–	135,0	20,00	**PHP 80-14M-55RSB**
		401,07	90	3	398,28	–	28	82,0	70,0	–	70,0	–	135,0	22,60	**PHP 90-14M-55RSB**
		499,11	112	3	496,32	–	28	82,0	70,0	–	70,0	–	135,0	29,50	**PHP 112-14M-55RSB**
		641,71	144	3	638,92	–	28	82,0	70,0	–	70,0	–	135,0	39,00	**PHP 144-14M-55RSB**
		748,66	168	3	745,87	–	28	82,0	70,0	–	70,0	–	135,0	48,50	**PHP 168-14M-55RSB**
		855,62	192	3	852,82	–	28	82,0	70,0	–	70,0	–	135,0	57,80	**PHP 192-14M-55RSB**
		962,57	216	3	959,76	–	28	82,0	70,0	–	70,0	–	150,0	67,00	**PHP 216-14M-55RSB**
14	**85**	124,78	28	1F	122,12	127,0	24	67,0	102,0	–	117,0	–	100,0	7,70	**PHP 28-14M-85RSB**
		129,23	29	1F	126,57	138,0	24	67,0	102,0	–	117,0	–	100,0	8,40	**PHP 29-14M-85RSB**
		133,69	30	1F	130,99	138,0	24	67,0	102,0	–	117,0	–	100,0	9,10	**PHP 30-14M-85RSB**
		142,60	32	1F	139,88	154,0	24	67,0	102,0	–	117,0	–	100,0	10,50	**PHP 32-14M-85RSB**
		151,52	34	1F	148,79	160,0	24	67,0	102,0	–	117,0	–	100,0	11,90	**PHP 34-14M-85RSB**
		160,43	36	1F	157,68	168,0	32	67,0	102,0	–	117,0	–	100,0	13,20	**PHP 36-14M-85RSB**
		169,34	38	1F	166,60	183,0	32	80,0	102,0	–	117,0	–	120,0	15,15	**PHP 38-14M-85RSB**
		178,25	40	1F	175,49	188,0	32	90,0	102,0	–	117,0	–	135,0	17,10	**PHP 40-14M-85RSB**
		196,08	44	1F	193,28	211,0	32	90,0	102,0	–	117,0	–	135,0	23,30	**PHP 44-14M-85RSB**
		213,90	48	1F	211,11	226,0	32	100,0	102,0	–	117,0	–	150,0	25,00	**PHP 48-14M-85RSB**
		249,55	56	7F	246,76	256,0	32	90,0	102,0	–	102,0	–	150,0	25,00	**PHP 56-14M-85RSB**
		285,21	64	7F	282,41	296,0	32	90,0	102,0	–	102,0	–	150,0	28,20	**PHP 64-14M-85RSB**
		320,86	72	3	318,06	–	32	90,0	102,0	–	102,0	–	150,0	28,80	**PHP 72-14M-85RSB**
		356,51	80	3	353,71	–	32	90,0	102,0	–	102,0	–	150,0	30,10	**PHP 80-14M-85RSB**
		401,07	90	3	398,28	–	32	90,0	102,0	–	102,0	–	150,0	33,00	**PHP 90-14M-85RSB**
		499,11	112	3	496,32	–	32	90,0	102,0	–	102,0	–	150,0	41,80	**PHP 112-14M-85RSB**
		641,71	144	3	638,92	–	32	90,0	102,0	–	102,0	–	150,0	52,40	**PHP 144-14M-85RSB**

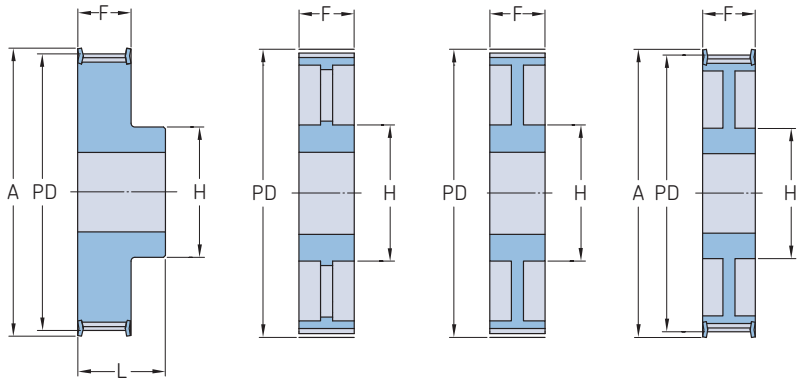

Pitch	Belt width	Pitch diameter	Number of teeth	Pulley type	Dimensions Outer diameter									Mass	Designation
		PD			OD	A	B Min.	Max.	F	K	L	M	H		
mm			–	–	mm									kg	–
14	**85**	748,66	168	3	745,87	–	32	90,0	102,0	–	102,0	–	150,0	60,30	**PHP 168-14M-85RSB**
		855,62	192	3	852,82	–	32	100,0	102,0	–	102,0	–	165,0	70,20	**PHP 192-14M-85RSB**
		962,57	216	3	959,76	–	32	100,0	102,0	–	102,0	–	165,0	81,00	**PHP 216-14M-85RSB**
14	**115**	124,78	28	1F	122,12	127,0	32	67,0	133,0	–	148,0	–	100,0	9,20	**PHP 28-14M-115RSB**
		129,23	29	1F	126,57	138,0	32	67,0	133,0	–	148,0	–	100,0	10,20	**PHP 29-14M-115RSB**
		133,69	30	1F	130,99	138,0	32	67,0	133,0	–	148,0	–	100,0	11,20	**PHP 30-14M-115RSB**
		142,60	32	1F	139,88	154,0	32	67,0	133,0	–	148,0	–	100,0	13,20	**PHP 32-14M-115RSB**
		151,52	34	1F	148,79	160,0	32	67,0	133,0	–	148,0	–	100,0	14,80	**PHP 34-14M-115RSB**
		160,43	36	1F	157,68	168,0	32	80,0	133,0	–	148,0	–	120,0	16,60	**PHP 36-14M-115RSB**
		169,34	38	1F	166,60	183,0	32	80,0	133,0	–	148,0	–	120,0	19,20	**PHP 38-14M-115RSB**
		178,25	40	1F	175,49	188,0	32	90,0	133,0	–	148,0	–	135,0	20,56	**PHP 40-14M-115RSB**
		196,08	44	1F	193,28	211,0	32	94,0	133,0	–	148,0	–	140,0	26,00	**PHP 44-14M-115RSB**
		213,90	48	1F	211,11	226,0	32	100,0	133,0	–	148,0	–	150,0	30,00	**PHP 48-14M-115RSB**
		249,55	56	1F	246,76	256,0	32	100,0	133,0	–	148,0	–	150,0	36,00	**PHP 56-14M-115RSB**
		285,21	64	7F	282,41	296,0	32	90,0	133,0	–	133,0	–	150,0	39,00	**PHP 64-14M-115RSB**
		320,86	72	3	318,06	–	32	90,0	133,0	–	133,0	–	150,0	32,83	**PHP 72-14M-115RSB**
		356,51	80	3	353,71	–	32	90,0	133,0	–	133,0	–	150,0	35,55	**PHP 80-14M-115RSB**
		401,07	90	3	398,28	–	32	90,0	133,0	–	133,0	–	150,0	41,00	**PHP 90-14M-115RSB**
		499,11	112	3	496,32	–	32	90,0	133,0	–	133,0	–	150,0	54,40	**PHP 112-14M-115RSB**
		641,71	144	3	638,92	–	32	100,0	133,0	–	133,0	–	165,0	67,80	**PHP 144-14M-115RSB**
		748,66	168	3	745,87	–	32	100,0	133,0	–	133,0	–	165,0	75,80	**PHP 168-14M-115RSB**
		855,62	192	3	852,82	–	32	100,0	133,0	–	133,0	–	165,0	90,30	**PHP 192-14M-115RSB**
		962,57	216	3	959,76	–	32	100,0	133,0	–	133,0	–	165,0	105,00	**PHP 216-14M-115RSB**
14	**170**	124,78	28	1F	122,12	127,0	32	67,0	187,0	–	202,0	–	100,0	13,80	**PHP 28-14M-170RSB**
		129,23	29	1F	126,57	138,0	32	67,0	187,0	–	202,0	–	100,0	14,20	**PHP 29-14M-170RSB**
		133,69	30	1F	130,99	138,0	32	67,0	187,0	–	202,0	–	100,0	15,60	**PHP 30-14M-170RSB**
		142,60	32	1F	139,88	154,0	32	67,0	187,0	–	202,0	–	100,0	18,10	**PHP 32-14M-170RSB**
		151,52	34	1F	148,79	160,0	32	67,0	187,0	–	202,0	–	100,0	20,40	**PHP 34-14M-170RSB**
		160,43	36	1F	157,68	168,0	32	80,0	187,0	–	202,0	–	120,0	23,50	**PHP 36-14M-170RSB**
		169,34	38	1F	166,60	183,0	32	90,0	187,0	–	202,0	–	135,0	26,50	**PHP 38-14M-170RSB**
		178,25	40	1F	175,49	188,0	32	94,0	187,0	–	202,0	–	140,0	30,10	**PHP 40-14M-170RSB**
		196,08	44	1F	193,28	211,0	32	100,0	187,0	–	202,0	–	160,0	37,80	**PHP 44-14M-170RSB**
		213,90	48	1F	211,11	226,0	32	107,0	187,0	–	202,0	–	160,0	44,50	**PHP 48-14M-170RSB**
		249,55	56	1F	246,76	256,0	32	110,0	187,0	–	202,0	–	160,0	61,00	**PHP 56-14M-170RSB**
		285,21	64	1F	282,41	296,0	32	120,0	187,0	–	202,0	–	180,0	81,00	**PHP 64-14M-170RSB**
		320,86	72	7	318,06	–	32	120,0	187,0	–	187,0	–	180,0	61,40	**PHP 72-14M-170RSB**
		356,51	80	7	353,71	–	32	108,0	187,0	–	187,0	–	180,0	65,00	**PHP 80-14M-170RSB**
		401,07	90	3	398,28	–	38	108,0	187,0	–	187,0	–	180,0	68,00	**PHP 90-14M-170RSB**
		499,11	112	3	496,32	–	38	108,0	187,0	–	187,0	–	200,0	87,50	**PHP 112-14M-170RSB**
		641,71	144	3	638,92	–	38	108,0	187,0	–	187,0	–	220,0	114,80	**PHP 144-14M-170RSB**
		748,66	168	3	745,87	–	38	108,0	187,0	–	187,0	–	220,0	125,00	**PHP 168-14M-170RSB**
		855,62	192	3	852,82	–	38	108,0	187,0	–	187,0	–	220,0	136,40	**PHP 192-14M-170RSB**
		962,57	216	3	959,76	–	38	108,0	187,0	–	187,0	–	220,0	147,00	**PHP 216-14M-170RSB**

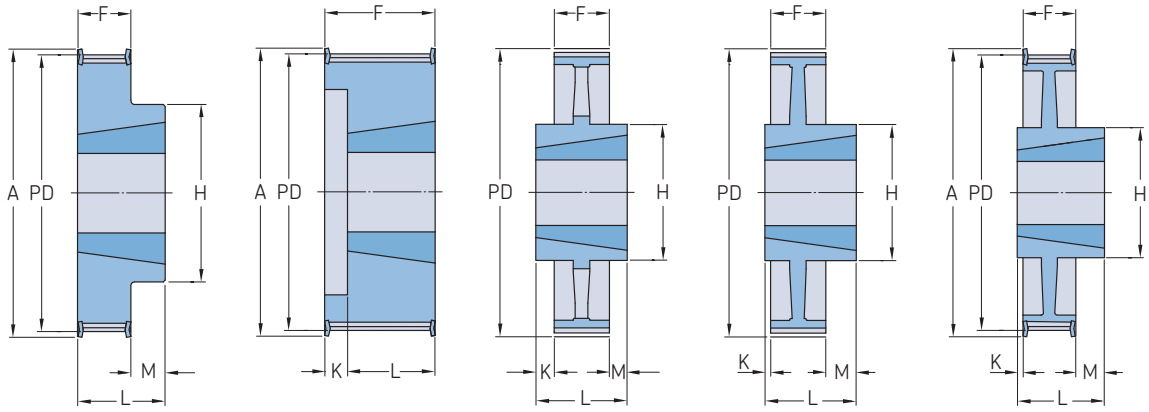

Type 3F | Type 4F | Type 10 | Type 12 | Type 12F

Pitch	Belt width	Pitch diameter PD	Number of teeth	Pulley type	Bushing number	Dimensions Outer diameter OD	A	B Min.	B Max.	F	K	L	M	H	Mass*	Designation
mm			–	–	–	mm									kg	–
5	**15**	54,11	34	3F	1008	52,97	58	9	25,0	20,5	–	22,0	1,5	43	0,19	**PHP 34-5M-15TB**
		57,30	36	3F	1108	56,16	61	9	28,0	20,5	–	22,0	1,5	45	0,20	**PHP 36-5M-15TB**
		60,48	38	3F	1108	59,34	65	9	28,0	20,5	–	22,0	1,5	48	0,25	**PHP 38-5M-15TB**
		63,66	40	3F	1108	62,52	68	9	28,0	20,5	–	22,0	1,5	52	0,31	**PHP 40-5M-15TB**
		70,03	44	3F	1108	68,89	74	9	28,0	20,5	–	22,0	1,5	54	0,40	**PHP 44-5M-15TB**
		76,39	48	3F	1210	75,25	80	11	32,0	20,5	–	25,0	4,5	64	0,45	**PHP 48-5M-15TB**
		89,13	56	3F	1210	87,99	93	11	32,0	20,5	–	25,0	4,5	70	0,67	**PHP 56-5M-15TB**
		101,86	64	3F	1210	100,72	106	11	32,0	20,5	–	25,0	4,5	78	0,96	**PHP 64-5M-15TB**
		114,59	72	3F	1610	113,45	118	14	42,0	20,5	–	25,0	4,5	90	1,19	**PHP 72-5M-15TB**
		127,32	80	3F	1610	126,18	135	14	42,0	20,5	–	25,0	4,5	92	1,57	**PHP 80-5M-15TB**
		143,24	90	10	1610	142,10	–	14	42,0	20,5	2,3	25,0	2,3	92	1,47	**PHP 90-5M-15TB**
		178,25	112	10	1610	177,11	–	14	42,0	20,5	2,3	25,0	2,3	92	1,94	**PHP 112-5M-15TB**
		216,45	136	10	2012	215,31	–	14	50,0	20,5	5,8	32,0	5,8	106	3,06	**PHP 136-5M-15TB**
		238,73	150	10	2012	237,51	–	14	50,0	20,5	5,8	32,0	5,8	106	4,50	**PHP 150-5M-15TB**
8	**20**	56,02	22	4F	1008	54,65	65	9	25,0	28,0	6,0	22,0	–	–	0,24	**PHP 22-8M-20TB**
		61,12	24	4F	1108	59,75	70	9	28,0	28,0	6,0	22,0	–	–	0,30	**PHP 24-8M-20TB**
		66,21	26	4F	1108	64,84	75	9	28,0	28,0	6,0	22,0	–	–	0,36	**PHP 26-8M-20TB**
		71,30	28	4F	1108	70,08	80	9	28,0	28,0	6,0	22,0	–	–	0,44	**PHP 28-8M-20TB**
		76,39	30	4F	1108	75,13	85	11	28,0	28,0	6,0	22,0	–	–	0,45	**PHP 30-8M-20TB**
		81,49	32	4F	1610	80,16	90	11	42,0	28,0	3,0	25,0	–	–	0,50	**PHP 32-8M-20TB**
		86,58	34	4F	1610	85,22	95	14	42,0	28,0	3,0	25,0	–	–	0,55	**PHP 34-8M-20TB**
		91,67	36	4F	1610	90,30	100	14	42,0	28,0	3,0	25,0	–	–	0,68	**PHP 36-8M-20TB**
		96,77	38	4F	1610	95,39	106	14	42,0	28,0	3,0	25,0	–	–	0,80	**PHP 38-8M-20TB**
		101,86	40	4F	1610	100,49	110	14	42,0	28,0	3,0	25,0	–	–	1,00	**PHP 40-8M-20TB**
		106,95	42	4F	1610	105,58	110	14	42,0	28,0	3,0	25,0	–	–	1,11	**PHP 42-8M-20TB**
		112,05	44	3F	2012	110,67	121	14	50,0	28,0	–	32,0	4,0	92	1,20	**PHP 44-8M-20TB**
		122,23	48	3F	2012	120,86	131	14	50,0	28,0	–	32,0	4,0	96	1,60	**PHP 48-8M-20TB**
		142,60	56	3F	2012	141,23	151	14	50,0	28,0	–	32,0	4,0	110	2,40	**PHP 56-8M-20TB**
		152,79	60	3F	2012	151,42	162	14	50,0	28,0	–	32,0	4,0	110	2,55	**PHP 60-8M-20TB**
		162,97	64	12F	2012	161,60	171	14	50,0	28,0	–	32,0	4,0	110	2,70	**PHP 64-8M-20TB**
		183,35	72	12F	2012	181,97	192	14	50,0	28,0	–	32,0	4,0	110	3,30	**PHP 72-8M-20TB**
		203,72	80	12	2012	202,35	–	16	50,0	28,0	–	32,0	4,0	110	3,50	**PHP 80-8M-20TB**
		229,18	90	12	2012	227,81	–	16	50,0	28,0	–	32,0	4,0	110	3,65	**PHP 90-8M-20TB**
8	**30**	50,93	20	4F	1008	49,56	60	9	25,0	38,0	16,0	22,0	–	–	0,23	**PHP 20-8M-30TB**
		53,47	21	4F	1008	52,10	65	9	25,0	38,0	16,0	22,0	–	–	0,26	**PHP 21-8M-30TB**
		56,02	22	4F	1008	54,65	65	9	25,0	38,0	16,0	22,0	–	–	0,29	**PHP 22-8M-30TB**
		58,57	23	4F	1108	57,20	70	9	28,0	38,0	16,0	22,0	–	–	0,32	**PHP 23-8M-30TB**
		61,12	24	4F	1108	59,75	70	9	28,0	38,0	16,0	22,0	–	–	0,38	**PHP 24-8M-30TB**
		63,66	25	4F	1108	62,29	75	9	28,0	38,0	16,0	22,0	–	–	0,41	**PHP 25-8M-30TB**
		66,21	26	4F	1108	64,84	75	9	28,0	38,0	16,0	22,0	–	–	0,45	**PHP 26-8M-30TB**
		68,75	27	4F	1108	67,38	80	9	28,0	38,0	16,0	22,0	–	–	0,49	**PHP 27-8M-30TB**
		71,30	28	4F	1210	70,08	80	11	32,0	38,0	16,0	25,0	–	–	0,50	**PHP 28-8M-30TB**

* Mass does not include bushings.

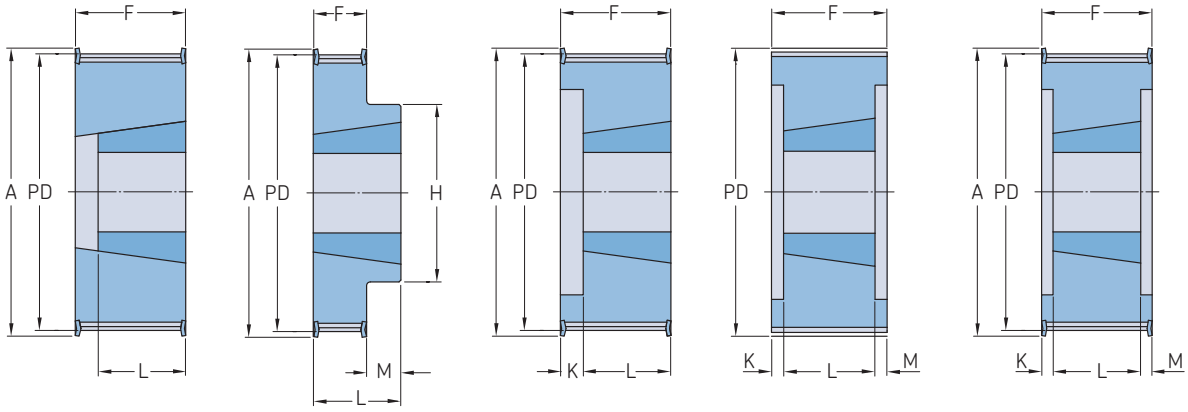

Type 2F | Type 3F | Type 4F | Type 6 | Type 6F

Pitch	Belt width	Pitch diameter PD	Number of teeth	Pulley type	Bushing number	Dimensions Outer diameter OD	A	B Min.	Max.	F	K	L	M	H	Mass*	Designation
mm			–	–	–	mm									kg	–
8	**30**	76,39	30	2F	1615	75,13	85	11	42,0	38,0	–	38,0	–	–	0,55	**PHP 30-8M-30TB**
		78,94	31	2F	1615	77,57	90	14	42,0	38,0	–	38,0	–	–	0,57	**PHP 31-8M-30TB**
		81,49	32	2F	1615	80,16	90	14	42,0	38,0	–	38,0	–	–	0,59	**PHP 32-8M-30TB**
		84,03	33	2F	1615	82,66	95	14	42,0	38,0	–	38,0	–	–	0,73	**PHP 33-8M-30TB**
		86,58	34	2F	1615	85,22	95	14	42,0	38,0	–	38,0	–	–	0,77	**PHP 34-8M-30TB**
		89,13	35	2F	1615	87,75	100	14	42,0	38,0	–	38,0	–	–	0,82	**PHP 35-8M-30TB**
		91,67	36	2F	1615	90,30	100	14	42,0	38,0	–	38,0	–	–	0,96	**PHP 36-8M-30TB**
		96,77	38	2F	1615	95,39	106	14	42,0	38,0	–	38,0	–	–	1,15	**PHP 38-8M-30TB**
		101,86	40	2F	1615	100,49	110	14	42,0	38,0	–	38,0	–	–	1,34	**PHP 40-8M-30TB**
		106,95	42	2F	1615	105,58	110	14	42,0	38,0	–	38,0	–	–	1,36	**PHP 42-8M-30TB**
		112,05	44	6F	2012	110,67	121	14	50,0	38,0	6,0	32,0	–	–	1,33	**PHP 44-8M-30TB**
		114,59	45	6F	2012	113,22	121	14	50,0	38,0	6,0	32,0	–	–	1,62	**PHP 45-8M-30TB**
		122,23	48	6F	2012	120,86	131	14	50,0	38,0	6,0	32,0	–	–	1,78	**PHP 48-8M-30TB**
		127,32	50	6F	2012	125,95	136	14	50,0	38,0	3,0	32,0	3,0	–	2,08	**PHP 50-8M-30TB**
		132,42	52	6F	2012	131,04	141	14	50,0	38,0	3,0	32,0	3,0	–	2,39	**PHP 52-8M-30TB**
		142,60	56	6F	2012	141,23	151	14	50,0	38,0	6,0	32,0	–	–	3,76	**PHP 56-8M-30TB**
		147,70	58	6F	2012	146,32	156	14	50,0	38,0	3,0	32,0	3,0	–	3,87	**PHP 58-8M-30TB**
		152,79	60	6F	2517	151,42	162	16	60,0	38,0	3,0	45,0	3,0	–	3,98	**PHP 60-8M-30TB**
		162,97	64	3F	2517	161,60	171	16	60,0	38,0	–	45,0	7,0	125	4,20	**PHP 64-8M-30TB**
		183,35	72	12F	2517	181,97	192	16	60,0	38,0	–	45,0	7,0	125	4,30	**PHP 72-8M-30TB**
		203,72	80	12	2517	202,35	–	16	60,0	38,0	–	45,0	7,0	125	4,60	**PHP 80-8M-30TB**
		229,18	90	12	2517	227,81	–	16	60,0	38,0	–	45,0	7,0	125	5,00	**PHP 90-8M-30TB**
		285,21	112	12	2517	283,83	–	16	60,0	38,0	–	45,0	7,0	125	6,20	**PHP 112-8M-30TB**
		366,69	144	12	2517	365,32	–	16	60,0	38,0	–	45,0	7,0	125	9,00	**PHP 144-8M-30TB**
		427,81	168	10	3020	426,44	–	25	75,0	38,0	7,0	51,0	7,0	170	15,00	**PHP 168-8M-30TB**
		488,92	192	10	3525	487,55	–	35	100,0	38,0	14,0	65,0	7,0	198	18,50	**PHP 192-8M-30TB**

* Mass does not include bushings.

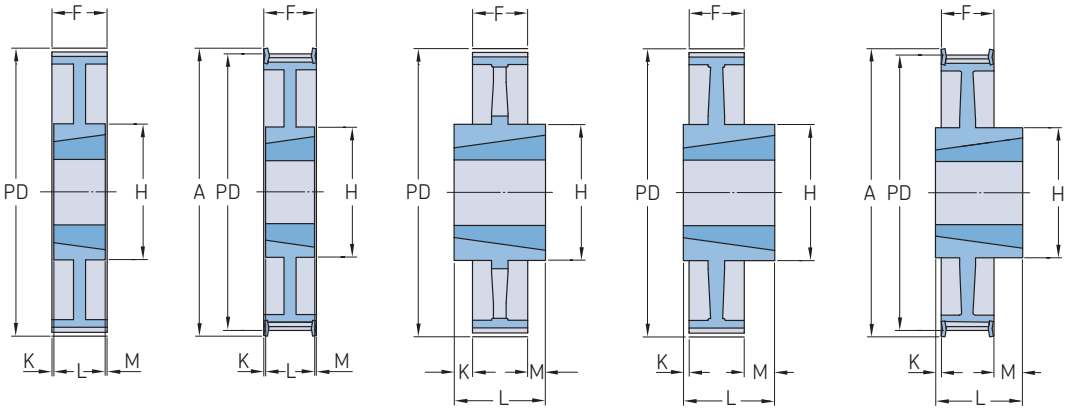

Type 7 Type 7F Type 10 Type 12 Type 12F

Pitch	Belt width	Pitch diameter PD	Number of teeth	Pulley type	Bushing number	Dimensions Outer diameter OD	A	B Min.	B Max.	F	K	L	M	H	Mass*	Designation
mm			–	–	–	mm									kg	–
8	**50**	61,12	24	6F	1108	59,75	70	9	32,0	60,0	19,0	22,0	19,0	–	0,35	**PHP 24-8M-50TB**
		66,21	26	6F	1108	64,84	75	9	32,0	60,0	19,0	22,0	19,0	–	0,48	**PHP 26-8M-50TB**
		68,75	27	6F	1108	67,38	75	9	32,0	60,0	19,0	22,0	19,0	–	0,55	**PHP 27-8M-50TB**
		71,30	28	4F	1210	70,08	80	11	32,0	60,0	35,0	22,0	35,0	–	0,60	**PHP 28-8M-50TB**
		76,39	30	4F	1615	75,13	85	14	42,0	60,0	23,0	25,0	–	–	0,65	**PHP 30-8M-50TB**
		78,94	31	4F	1615	77,57	87	14	42,0	60,0	23,0	25,0	–	–	0,77	**PHP 31-8M-50TB**
		81,49	32	4F	1615	80,16	90	14	42,0	60,0	23,0	25,0	–	–	0,82	**PHP 32-8M-50TB**
		84,03	33	4F	1615	82,66	90	14	42,0	60,0	23,0	25,0	–	–	0,98	**PHP 33-8M-50TB**
		86,58	34	4F	1615	85,22	95	14	42,0	60,0	23,0	25,0	–	–	1,06	**PHP 34-8M-50TB**
		89,13	35	4F	1615	87,75	95	14	42,0	60,0	23,0	25,0	–	–	1,18	**PHP 35-8M-50TB**
		91,67	36	4F	1615	90,30	100	14	42,0	60,0	23,0	25,0	–	–	1,30	**PHP 36-8M-50TB**
		96,77	38	4F	1615	95,39	105	14	42,0	60,0	23,0	25,0	–	–	1,60	**PHP 38-8M-50TB**
		101,86	40	4F	2012	100,49	110	14	50,0	60,0	29,0	32,0	–	–	1,71	**PHP 40-8M-50TB**
		106,95	42	4F	2012	105,58	111	14	50,0	60,0	29,0	32,0	28,0	–	1,75	**PHP 42-8M-50TB**
		112,05	44	6F	2012	110,67	121	14	50,0	60,0	–	32,0	28,0	–	1,78	**PHP 44-8M-50TB**
		114,59	45	6F	2012	113,22	121	14	50,0	60,0	–	32,0	28,0	–	1,91	**PHP 45-8M-50TB**
		122,23	48	6F	2012	120,86	131	14	50,0	60,0	–	32,0	28,0	–	2,30	**PHP 48-8M-50TB**
		127,32	50	6F	2012	125,95	131	14	50,0	60,0	–	32,0	28,0	–	2,58	**PHP 50-8M-50TB**
		132,42	52	6F	2012	131,04	140	14	50,0	60,0	–	32,0	28,0	–	2,85	**PHP 52-8M-50TB**
		142,60	56	6F	2517	141,23	151	16	60,0	60,0	–	45,0	15,0	–	3,40	**PHP 56-8M-50TB**
		147,70	58	6F	2517	146,32	156	16	60,0	60,0	–	45,0	15,0	–	3,80	**PHP 58-8M-50TB**
		152,79	60	6F	2517	151,42	158	16	60,0	60,0	–	45,0	15,0	–	4,20	**PHP 60-8M-50TB**
		162,97	64	6F	2517	161,60	171	16	60,0	60,0	–	45,0	15,0	–	5,00	**PHP 64-8M-50TB**
		183,35	72	7F	2517	181,97	192	16	60,0	60,0	7,5	45,0	7,5	125	6,70	**PHP 72-8M-50TB**
		203,72	80	6	3020	202,35	–	25	75,0	60,0	4,5	45,0	4,5	–	8,80	**PHP 80-8M-50TB**
		229,18	90	7	3020	227,81	–	25	75,0	60,0	4,5	51,0	4,5	160	10,00	**PHP 90-8M-50TB**
		285,21	112	7	3020	283,83	–	25	75,0	60,0	4,5	51,0	4,5	170	12,00	**PHP 112-8M-50TB**

* Mass does not include bushings.

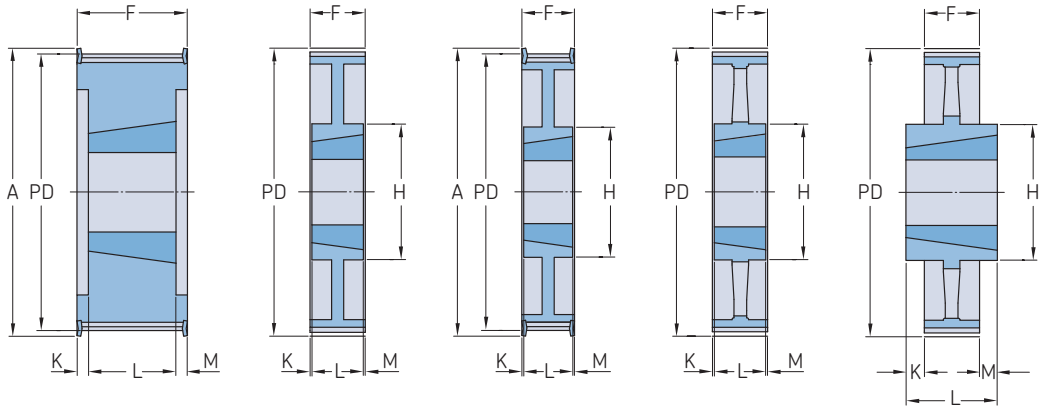

Type 6F Type 7 Type 7F Type 8 Type 10

Pitch	Belt width	Pitch diameter PD	Number of teeth	Pulley type	Bushing number	Dimensions Outer diameter OD	A	B Min.	Max.	F	K	L	M	H	Mass*	Designation
mm			–	–	–	mm									kg	–
8	**50**	366,69	144	8	3020	365,32	–	25	75,0	60,0	4,5	51,0	4,5	170	15,20	**PHP 144-8M-50TB**
		427,81	168	10	3525	426,44	–	25	100,0	60,0	4,5	51,0	4,5	170	16,40	**PHP 168-8M-50TB**
		488,92	192	10	3525	487,55	–	25	100,0	60,0	4,5	51,0	4,5	170	21,80	**PHP 192-8M-50TB**
8	**85**	61,12	24	6F	1108	59,75	70	9	28,0	95,0	36,5	22,0	36,5	–	0,46	**PHP 24-8M-85TB**
		66,21	26	6F	1108	64,84	75	9	28,0	95,0	36,5	22,0	36,5	–	0,64	**PHP 26-8M-85TB**
		71,30	28	6F	1108	70,08	80	9	28,0	95,0	36,5	22,0	36,5	–	0,82	**PHP 28-8M-85TB**
		76,39	30	6F	1615	75,13	85	14	42,0	95,0	36,5	22,0	36,5	–	1,17	**PHP 30-8M-85TB**
		84,03	33	6F	1615	82,66	90	14	42,0	95,0	36,5	22,0	36,5	–	1,34	**PHP 33-8M-85TB**
		86,58	34	6F	1615	85,22	95	14	42,0	95,0	28,5	38,0	28,5	–	1,43	**PHP 34-8M-85TB**
		89,13	35	6F	1615	87,75	95	14	42,0	95,0	28,5	38,0	28,5	–	1,54	**PHP 35-8M-85TB**
		91,67	36	6F	1615	90,30	100	14	42,0	95,0	28,5	38,0	28,5	–	1,87	**PHP 36-8M-85TB**
		96,77	38	6F	1615	95,39	106	14	42,0	95,0	28,5	38,0	28,5	–	2,20	**PHP 38-8M-85TB**
		101,86	40	6F	2012	100,49	110	14	50,0	95,0	31,5	32,0	31,5	–	1,80	**PHP 40-8M-85TB**
		106,95	42	6F	2012	105,58	110	14	50,0	95,0	31,5	32,0	31,5	–	2,16	**PHP 42-8M-85TB**
		112,05	44	6F	2012	110,67	121	14	50,0	95,0	31,5	32,0	31,5	–	2,30	**PHP 44-8M-85TB**
		114,59	45	6F	2012	113,22	121	14	50,0	95,0	31,5	32,0	31,5	–	2,39	**PHP 45-8M-85TB**
		122,23	48	6F	2517	120,86	131	16	60,0	95,0	25,0	45,0	25,0	–	2,66	**PHP 48-8M-85TB**
		127,32	50	6F	2517	125,95	131	16	60,0	95,0	25,0	45,0	25,0	–	3,11	**PHP 50-8M-85TB**
		132,42	52	6F	2517	131,04	140	16	60,0	95,0	25,0	45,0	25,0	–	3,56	**PHP 52-8M-85TB**
		142,60	56	6F	2517	141,23	151	16	60,0	95,0	25,0	45,0	25,0	–	4,45	**PHP 56-8M-85TB**
		147,70	58	6F	2517	146,32	158	16	60,0	95,0	25,0	45,0	25,0	–	4,89	**PHP 58-8M-85TB**
		152,79	60	6F	2517	151,42	158	16	60,0	95,0	25,0	45,0	25,0	–	5,33	**PHP 60-8M-85TB**
		162,97	64	7F	2517	161,60	171	16	60,0	95,0	25,0	45,0	25,0	–	6,20	**PHP 64-8M-85TB**
		183,35	72	7	3020	181,97	192	25	75,0	95,0	22,0	51,0	22,0	–	8,00	**PHP 72-8M-85TB**
		203,72	80	8	3020	202,35	–	25	75,0	95,0	22,0	51,0	22,0	–	10,00	**PHP 80-8M-85TB**
		229,18	90	8	3020	227,81	–	25	75,0	95,0	22,0	51,0	22,0	–	10,80	**PHP 90-8M-85TB**
		285,21	112	8	3020	283,83	–	25	75,0	95,0	22,0	51,0	22,0	170	15,00	**PHP 112-8M-85TB**
		366,69	144	8	3535	365,32	–	35	90,0	95,0	3,0	89,0	3,0	190	20,00	**PHP 144-8M-85TB**
		427,81	168	8	3535	426,44	–	35	90,0	95,0	3,0	89,0	3,0	190	23,00	**PHP 168-8M-85TB**
		488,92	192	8	3535	487,55	–	35	90,0	95,0	3,0	89,0	3,0	190	28,50	**PHP 192-8M-85TB**
14	**40**	124,78	28	6F	2012	122,12	141	14	50,0	54,0	11,0	32,0	11,0	–	2,66	**PHP 28-14M-40TB**
		129,23	29	6F	2012	126,57	141	14	50,0	54,0	11,0	32,0	11,0	–	2,66	**PHP 29-14M-40TB**
		133,69	30	6F	2012	130,99	156	14	50,0	54,0	11,0	32,0	11,0	–	2,89	**PHP 30-14M-40TB**
		142,60	32	6F	2012	139,88	156	14	50,0	54,0	11,0	32,0	11,0	–	3,51	**PHP 32-14M-40TB**
		151,52	34	6F	2517	148,79	165	16	60,0	54,0	4,5	45,0	4,5	–	3,87	**PHP 34-14M-40TB**
		155,97	35	6F	2517	153,18	173	16	60,0	54,0	4,5	45,0	4,5	–	4,34	**PHP 35-14M-40TB**
		160,43	36	6F	2517	157,68	173	16	60,0	54,0	4,5	45,0	4,5	–	4,62	**PHP 36-14M-40TB**
		169,34	38	6F	2517	166,60	182	16	60,0	54,0	4,5	45,0	4,5	–	5,40	**PHP 38-14M-40TB**
		178,25	40	6F	2517	175,49	191	16	60,0	54,0	4,5	45,0	4,5	–	6,23	**PHP 40-14M-40TB**
		187,17	42	6F	2517	184,37	209	16	60,0	54,0	4,5	45,0	4,5	–	6,75	**PHP 42-14M-40TB**
		196,08	44	6F	3020	193,28	209	25	75,0	54,0	1,5	51,0	1,5	–	7,26	**PHP 44-14M-40TB**
		200,54	45	6F	3020	197,74	227	25	75,0	54,0	1,5	51,0	1,5	–	8,20	**PHP 45-14M-40TB**
		213,90	48	6F	3020	211,11	227	25	75,0	54,0	1,5	51,0	1,5	–	9,33	**PHP 48-14M-40TB**
		222,82	50	6F	3020	220,02	246	25	75,0	54,0	1,5	51,0	1,5	–	10,10	**PHP 50-14M-40TB**
		249,55	56	6F	3020	246,76	264	25	75,0	54,0	1,5	51,0	1,5	–	10,80	**PHP 56-14M-40TB**
		267,38	60	7F	3020	264,59	281	25	75,0	54,0	1,5	51,0	1,5	170	13,10	**PHP 60-14M-40TB**
		285,21	64	7F	3020	282,41	296	25	75,0	54,0	1,5	51,0	1,5	170	15,40	**PHP 64-14M-40TB**
		320,86	72	7	3020	318,06	–	25	75,0	54,0	1,5	51,0	1,5	170	19,75	**PHP 72-14M-40TB**
		356,51	80	8	3020	353,71	–	25	75,0	54,0	1,5	51,0	1,5	170	20,00	**PHP 80-14M-40TB**
		401,07	90	8	3020	398,28	–	25	75,0	54,0	1,5	51,0	1,5	170	21,80	**PHP 90-14M-40TB**
		499,11	112	8	3020	496,32	–	25	75,0	54,0	1,5	51,0	1,5	170	29,60	**PHP 112-14M-40TB**
		641,71	144	8	3020	638,92	–	25	75,0	54,0	1,5	51,0	1,5	170	36,00	**PHP 144-14M-40TB**
		748,66	168	8	3020	745,87	–	25	75,0	54,0	1,5	51,0	1,5	170	48,00	**PHP 168-14M-40TB**

* Mass does not include bushings.

Pitch	Belt width	Pitch diameter PD	Number of teeth	Pulley type	Bushing number	Dimensions Outer diameter OD	A	B Min.	Max.	F	K	L	M	H	Mass*	Designation
mm			–	–	–	mm									kg	–
14	**40**	855,62	192	8	3020	852,82	–	25	75,0	54,0	1,5	51,0	1,5	170	53,00	**PHP 192-14M-40TB**
		962,56	216	8	3020	960,00	–	25	75,0	54,0	1,5	51,0	1,5	170	60,00	**PHP 216-14M-40TB**
14	**55**	124,78	28	6F	2012	122,12	141	14	50,0	70,0	19,0	32,0	19,0	–	2,88	**PHP 28-14M-55TB**
		129,23	29	6F	2012	126,57	141	14	50,0	70,0	19,0	32,0	19,0	–	3,18	**PHP 29-14M-55TB**
		133,69	30	6F	2517	130,99	156	16	60,0	70,0	12,5	45,0	12,5	–	3,21	**PHP 30-14M-55TB**
		142,60	32	6F	2517	139,88	156	16	60,0	70,0	12,5	45,0	12,5	–	3,90	**PHP 32-14M-55TB**
		151,51	34	6F	2517	148,79	165	16	60,0	70,0	12,5	45,0	12,5	–	4,55	**PHP 34-14M-55TB**
		155,97	35	6F	2517	153,18	173	16	60,0	70,0	12,5	45,0	12,5	–	4,88	**PHP 35-14M-55TB**
		160,43	36	6F	2517	157,68	173	16	60,0	70,0	12,5	45,0	12,5	–	5,20	**PHP 36-14M-55TB**
		169,34	38	6F	2517	166,60	182	16	60,0	70,0	12,5	45,0	12,5	–	6,20	**PHP 38-14M-55TB**
		178,25	40	6F	2517	175,49	191	16	60,0	70,0	12,5	45,0	12,5	–	7,00	**PHP 40-14M-55TB**
		187,17	42	6F	3020	184,37	209	25	75,0	70,0	9,5	51,0	9,5	–	7,80	**PHP 42-14M-55TB**
		196,08	44	6F	3020	193,28	209	25	75,0	70,0	9,5	51,0	9,5	–	8,42	**PHP 44-14M-55TB**
		200,54	45	6F	3020	197,74	227	25	75,0	70,0	9,5	51,0	9,5	–	9,51	**PHP 45-14M-55TB**
		213,90	48	6F	3020	211,11	227	25	75,0	70,0	9,5	51,0	9,5	–	10,64	**PHP 48-14M-55TB**
		228,82	50	6F	3020	220,02	246	25	75,0	70,0	9,5	51,0	9,5	–	11,52	**PHP 50-14M-55TB**
		249,55	56	6F	3020	246,76	264	25	75,0	70,0	9,5	51,0	9,5	–	12,40	**PHP 56-14M-55TB**
		267,38	60	7F	3020	264,59	281	25	75,0	70,0	9,5	51,0	9,5	170	14,00	**PHP 60-14M-55TB**
		285,21	64	7F	3020	282,41	298	25	75,0	70,0	9,5	51,0	9,5	170	15,18	**PHP 64-14M-55TB**
		320,86	72	7	3020	318,06	–	25	75,0	70,0	9,5	51,0	9,5	170	20,00	**PHP 72-14M-55TB**
		356,51	80	8	3020	353,71	–	25	75,0	70,0	9,5	51,0	9,5	170	22,50	**PHP 80-14M-55TB**
		401,07	90	8	3020	398,28	–	25	75,0	70,0	9,5	51,0	9,5	170	25,00	**PHP 90-14M-55TB**
		499,11	112	8	3020	496,32	–	25	75,0	70,0	9,5	51,0	9,5	170	33,40	**PHP 112-14M-55TB**
		641,71	144	8	3020	638,92	–	25	75,0	70,0	9,5	51,0	9,5	170	46,50	**PHP 144-14M-55TB**
		748,66	168	8	3020	745,87	–	25	75,0	70,0	9,5	51,0	9,5	170	58,50	**PHP 168-14M-55TB**
		855,62	192	8	3020	852,82	–	25	75,0	70,0	9,5	51,0	9,5	170	62,00	**PHP 192-14M-55TB**
		962,56	216	10	3535	960,00	–	35	90,0	70,0	9,5	51,0	9,5	190	74,80	**PHP 216-14M-55TB**
14	**85**	124,78	28	6F	2517	122,12	141	16	60,0	102,0	28,5	45,0	28,5	–	2,70	**PHP 28-14M-85TB**
		129,23	29	6F	2517	126,57	141	16	60,0	102,0	28,5	45,0	28,5	–	3,40	**PHP 29-14M-85TB**
		133,69	30	6F	2517	130,99	156	16	60,0	102,0	28,5	45,0	28,5	–	3,75	**PHP 30-14M-85TB**
		142,60	32	6F	2517	139,88	156	16	60,0	102,0	28,5	45,0	28,5	–	4,80	**PHP 32-14M-85TB**
		151,51	34	6F	2517	148,79	165	16	60,0	102,0	28,5	45,0	28,5	–	6,00	**PHP 34-14M-85TB**
		155,97	35	6F	2517	153,18	173	16	75,0	102,0	25,5	51,0	25,5	–	6,33	**PHP 35-14M-85TB**
		160,43	36	6F	3020	157,68	173	25	75,0	102,0	25,5	51,0	25,5	–	6,67	**PHP 36-14M-85TB**
		169,34	38	6F	3020	166,60	182	25	75,0	102,0	25,5	51,0	25,5	–	6,80	**PHP 38-14M-85TB**
		178,25	40	6F	3020	175,49	191	25	75,0	102,0	25,5	51,0	25,5	–	8,00	**PHP 40-14M-85TB**
		181,17	42	6F	3020	184,37	209	25	75,0	102,0	13,0	76,0	13,0	–	9,90	**PHP 42-14M-85TB**
		196,08	44	6F	3020	193,28	209	25	75,0	102,0	13,0	76,0	13,0	–	11,80	**PHP 44-14M-85TB**
		200,54	45	6F	3020	197,74	227	25	75,0	102,0	13,0	76,0	13,0	–	12,63	**PHP 45-14M-85TB**
		213,90	48	6F	3020	211,11	227	25	75,0	102,0	13,0	76,0	13,0	–	15,10	**PHP 48-14M-85TB**
		222,82	50	6F	3535	220,02	246	35	90,0	102,0	18,5	65,0	18,5	–	16,08	**PHP 50-14M-85TB**
		249,55	56	6F	3535	246,76	264	35	90,0	102,0	18,5	65,0	18,5	–	19,00	**PHP 56-14M-85TB**
		267,38	60	6F	3535	264,59	281	35	90,0	102,0	18,5	65,0	18,5	–	21,00	**PHP 60-14M-85TB**
		285,21	64	7F	3535	282,41	298	35	90,0	102,0	18,5	65,0	18,5	190	23,00	**PHP 64-14M-85TB**
		320,86	72	7	3535	318,06	–	35	90,0	102,0	18,5	65,0	18,5	190	25,00	**PHP 72-14M-85TB**
		356,51	80	8	3535	353,71	–	35	90,0	102,0	18,5	65,0	18,5	190	26,00	**PHP 80-14M-85TB**
		401,07	90	8	3535	398,28	–	35	90,0	102,0	18,5	65,0	18,5	190	27,80	**PHP 90-14M-85TB**
		499,11	112	8	3535	496,32	–	35	90,0	102,0	18,5	65,0	18,5	190	36,50	**PHP 112-14M-85TB**
		641,71	144	8	4040	638,92	–	40	100,0	102,0	18,5	65,0	18,5	230	48,00	**PHP 144-14M-85TB**
		748,66	168	8	4040	745,87	–	40	100,0	102,0	18,5	65,0	18,5	230	60,00	**PHP 168-14M-85TB**
		855,62	192	8	4040	852,82	–	40	100,0	102,0	–	102,0	–	230	86,00	**PHP 192-14M-85TB**
		962,56	216	8	4040	960,00	–	40	100,0	102,0	–	102,0	–	230	119,50	**PHP 216-14M-85TB**
14	**115**	124,78	28	6F	2517	122,12	141	16	60,0	133,0	44,0	45,0	44,0	–	3,77	**PHP 28-14M-115TB**
		129,23	29	6F	2517	126,57	141	16	60,0	133,0	44,0	45,0	44,0	–	4,00	**PHP 29-14M-115TB**
		133,69	30	6F	2517	130,99	156	16	60,0	133,0	44,0	45,0	44,0	–	5,00	**PHP 30-14M-115TB**
		142,60	32	6F	2517	139,88	156	16	60,0	133,0	44,0	45,0	44,0	–	6,00	**PHP 32-14M-115TB**
		151,52	34	6F	2517	148,79	165	16	60,0	133,0	44,0	45,0	44,0	–	7,20	**PHP 34-14M-115TB**
		155,97	35	6F	3020	153,18	173	25	75,0	133,0	41,0	51,0	41,0	–	7,00	**PHP 35-14M-115TB**
		160,43	36	6F	3020	157,68	173	25	75,0	133,0	41,0	51,0	41,0	–	7,30	**PHP 36-14M-115TB**
		169,34	38	6F	3020	166,60	182	25	75,0	133,0	41,0	51,0	41,0	–	8,40	**PHP 38-14M-115TB**
		178,25	40	6F	3020	175,49	191	25	75,0	133,0	41,0	51,0	41,0	–	9,20	**PHP 40-14M-115TB**
		187,17	42	6F	3030	184,37	209	35	75,0	133,0	28,5	76,0	28,5	–	11,60	**PHP 42-14M-115TB**
		196,08	44	6F	3030	193,28	209	35	75,0	133,0	28,5	76,0	28,5	–	14,00	**PHP 44-14M-115TB**
		200,54	45	6F	3030	197,74	227	35	75,0	133,0	28,5	76,0	28,5	–	15,60	**PHP 45-14M-115TB**
		213,90	48	6F	3030	211,11	227	35	75,0	133,0	28,5	76,0	28,5	–	17,10	**PHP 48-14M-115TB**
		222,82	50	6F	3535	220,02	246	35	90,0	133,0	22,0	89,0	22,0	–	21,00	**PHP 50-14M-115TB**
		249,55	56	6F	3535	246,76	264	35	90,0	133,0	22,0	89,0	22,0	–	24,80	**PHP 56-14M-115TB**
		267,38	60	6F	3535	264,59	281	35	90,0	133,0	22,0	89,0	22,0	–	25,90	**PHP 60-14M-115TB**
		285,21	64	7F	3535	282,41	298	35	90,0	133,0	22,0	89,0	22,0	190	27,00	**PHP 64-14M-115TB**
		320,86	72	7	3535	318,06	–	35	90,0	133,0	22,0	89,0	22,0	190	33,00	**PHP 72-14M-115TB**
		356,51	80	7	3535	353,71	–	35	90,0	133,0	22,0	89,0	22,0	190	37,00	**PHP 80-14M-115TB**
		401,07	90	7	3535	398,28	–	35	90,0	133,0	22,0	89,0	22,0	190	42,00	**PHP 90-14M-115TB**
		499,11	112	8	3535	496,32	–	35	90,0	133,0	22,0	89,0	22,0	190	56,00	**PHP 112-14M-115TB**

* Mass does not include bushings.

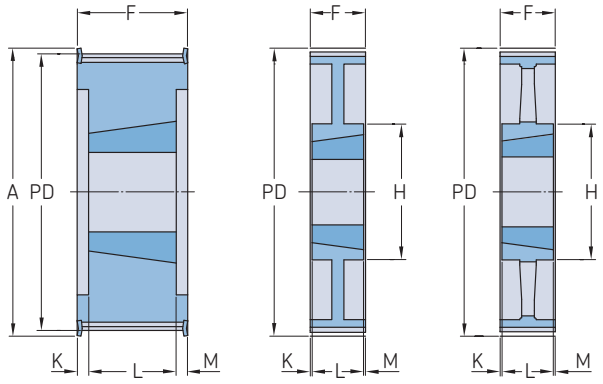

Type 6F Type 7 Type 8

Pitch	Belt width	Pitch diameter	Number of teeth	Pulley type	Bushing number	Dimensions Outer diameter									Mass*	Designation
		PD				OD	A	B Min.	Max.	F	K	L	M	H		
mm			–	–	–	mm									kg	–
14	**115**	641,71	144	8	4040	638,92	–	40	100,0	133,0	15,5	102,0	15,5	230	75,00	**PHP 144-14M-115TB**
		748,66	168	8	4040	745,87	–	40	100,0	133,0	15,5	102,0	15,5	230	92,60	**PHP 168-14M-115TB**
		855,62	192	8	4040	852,92	–	40	100,0	133,0	15,5	102,0	15,5	230	230,00	**PHP 192-14M-115TB**
		962,57	216	8	4040	959,76	–	40	100,0	133,0	15,5	102,0	15,5	230	127,00	**PHP 216-14M-115TB**
14	**170**	155,97	35	6F	3030	153,18	173	35	75,0	187,0	55,5	76,0	55,5	–	10,60	**PHP 35-14M-170TB**
		160,43	36	6F	3030	157,68	173	35	75,0	187,0	55,5	76,0	55,5	–	11,20	**PHP 36-14M-170TB**
		169,34	38	6F	3030	167,00	182	35	75,0	187,0	55,5	76,0	55,5	–	11,70	**PHP 38-14M-170TB**
		178,25	40	6F	3030	175,00	191	35	75,0	187,0	55,5	76,0	55,5	–	13,00	**PHP 40-14M-170TB**
		187,17	42	6F	3535	184,37	202	35	90,0	187,0	49,0	89,0	49,0	–	14,00	**PHP 42-14M-170TB**
		196,08	44	6F	3535	193,00	209	35	90,0	187,0	49,0	89,0	49,0	–	15,00	**PHP 44-14M-170TB**
		200,54	45	6F	3535	197,74	212	35	90,0	187,0	49,0	89,0	49,0	–	16,00	**PHP 45-14M-170TB**
		213,90	48	6F	3535	211,00	227	35	90,0	187,0	49,0	89,0	49,0	–	19,00	**PHP 48-14M-170TB**
		222,82	50	6F	3535	220,02	246	35	90,0	187,0	49,0	89,0	49,0	–	23,80	**PHP 50-14M-170TB**
		249,55	56	6F	3535	247,00	263	35	90,0	187,0	49,0	89,0	49,0	–	28,50	**PHP 56-14M-170TB**
		267,38	60	6F	4040	264,59	281	40	100,0	187,0	42,5	114,0	42,5	–	34,80	**PHP 60-14M-170TB**
		285,21	64	6F	4040	282,00	298	40	100,0	187,0	42,5	114,0	42,5	230	41,00	**PHP 64-14M-170TB**
		320,86	72	7	4040	318,00	–	40	100,0	187,0	42,5	114,0	42,5	230	46,90	**PHP 72-14M-170TB**
		356,51	80	7	4040	354,00	–	40	100,0	187,0	42,5	114,0	42,5	230	48,00	**PHP 80-14M-170TB**
		401,07	90	7	4040	398,00	–	40	100,0	187,0	42,5	114,0	42,5	230	52,50	**PHP 90-14M-170TB**
		499,11	112	7	5050	496,00	–	70	125,0	187,0	30,0	127,0	30,0	242	74,50	**PHP 112-14M-170TB**
		641,71	144	8	5050	639,00	–	70	125,0	187,0	30,0	127,0	30,0	394	91,00	**PHP 144-14M-170TB**
		748,86	168	8	5050	746,00	–	70	125,0	187,0	30,0	127,0	30,0	394	116,00	**PHP 168-14M-170TB**
		855,62	192	8	5050	853,00	–	70	125,0	187,0	30,0	127,0	30,0	394	134,00	**PHP 192-14M-170TB**
		962,57	216	8	5050	960,00	–	70	125,0	187,0	30,0	127,0	30,0	394	146,50	**PHP 216-14M-170TB**

* Mass does not include bushings.

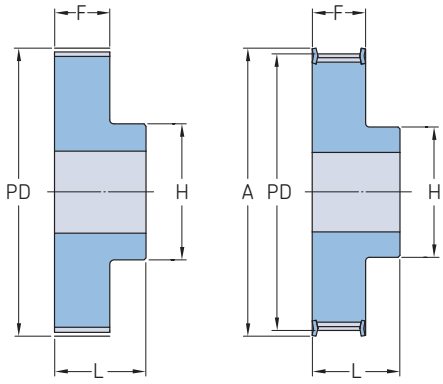

Type 1 Type 1F

Section	Belt width	Pitch diameter PD	Number of teeth	Pulley type	Dimensions Outer diameter OD	A	B Min.	Max.	H	F	L	Mass	Designation
–	mm		–	–	mm							kg	–
XL	**6,4 and 9,5**	16,17	10	1F	15,67	23	5	5	9,5	14,3	19,8	0,02	**PHP 10XL037RSB**
		17,79	11	1F	17,29	23	5	5	9,5	14,3	19,8	0,02	**PHP 11XL037RSB**
		19,40	12	1F	18,90	25	5	8	12,7	14,3	19,8	0,03	**PHP 12XL037RSB**
		21,02	13	1F	20,52	25	6	8	12,7	14,3	19,8	0,03	**PHP 13XL037RSB**
		22,64	14	1F	22,14	28	6	9	14,3	14,3	19,8	0,04	**PHP 14XL037RSB**
		24,26	15	1F	23,76	28	6	11	15,9	14,3	19,8	0,04	**PHP 15XL037RSB**
		25,87	16	1F	25,37	32	6	12	17,5	14,3	19,8	0,05	**PHP 16XL037RSB**
		27,49	17	1F	26,99	36	6	13	20,0	14,3	19,8	0,05	**PHP 17XL037RSB**
		29,11	18	1F	28,61	36	6	13	20,6	14,3	19,8	0,06	**PHP 18XL037RSB**
		30,72	19	1F	30,22	36	6	13	20,6	14,3	19,8	0,07	**PHP 19XL037RSB**
		32,34	20	1F	31,84	38	6	15	23,8	14,3	22,2	0,08	**PHP 20XL037RSB**
		33,96	21	1F	33,46	38	6	15	23,8	14,3	22,2	0,09	**PHP 21XL037RSB**
		35,57	22	1F	35,07	42	6	16	25,4	14,3	22,2	0,10	**PHP 22XL037RSB**
		38,81	24	1F	38,31	44	6	18	27,0	14,3	22,2	0,12	**PHP 24XL037RSB**
		42,04	26	1F	41,54	48	6	20	30,0	14,3	22,2	0,14	**PHP 26XL037RSB**
		43,66	27	1F	43,16	48	6	20	30,0	14,3	22,2	0,15	**PHP 27XL037RSB**
		45,28	28	1F	44,78	51	6	20	30,2	14,3	22,2	0,16	**PHP 28XL037RSB**
		46,89	29	1F	46,39	51	6	20	30,2	14,3	22,2	0,17	**PHP 29XL037RSB**
		48,51	30	1F	48,01	54	6	24	34,9	14,3	22,2	0,19	**PHP 30XL037RSB**
		51,74	32	1	51,24	57	8	25	40,0	14,3	25,4	0,11	**PHP 32XL037RSB**
		54,98	34	1	54,48	–	8	25	38,0	14,3	25,4	0,11	**PHP 34XL037RSB**
		56,60	35	1	56,10	–	8	25	38,0	14,3	25,4	0,12	**PHP 35XL037RSB**
		58,21	36	1	57,71	–	8	30	45,0	14,3	25,4	0,13	**PHP 36XL037RSB**
		61,45	38	1	60,95	–	8	30	45,0	14,3	25,4	0,15	**PHP 38XL037RSB**
		64,68	40	1	64,18	–	8	30	45,0	14,3	25,4	0,17	**PHP 40XL037RSB**
		67,91	42	1	67,41	–	8	30	45,0	14,3	25,4	0,20	**PHP 42XL037RSB**
		71,15	44	1	70,65	–	8	30	45,0	14,3	25,4	0,15	**PHP 44XL037RSB**
		72,77	45	1	72,27	–	8	30	45,0	14,3	25,4	0,15	**PHP 45XL037RSB**
		77,62	48	1	77,12	–	8	30	45,0	14,3	25,4	0,16	**PHP 48XL037RSB**
		97,02	60	1	96,52	–	8	30	45,0	14,3	25,4	0,18	**PHP 60XL037RSB**
		116,43	72	1	115,93	–	8	30	45,0	14,3	25,4	0,23	**PHP 72XL037RSB**
L	**12,7**	30,32	10	1F	29,56	36	6	14	22,0	19,0	26,0	0,11	**PHP 10L050RSB**
		33,35	11	1F	32,59	39	6	14	22,0	19,0	26,0	0,13	**PHP 11L050RSB**
		36,38	12	1F	35,62	42	6	20	28,0	19,0	30,0	0,19	**PHP 12L050RSB**
		39,41	13	1F	38,65	45	6	20	28,0	19,0	30,0	0,21	**PHP 13L050RSB**
		42,45	14	1F	41,69	48	8	20	28,0	19,0	30,0	0,23	**PHP 14L050RSB**
		45,48	15	1F	44,72	51	8	23	32,0	19,0	30,0	0,27	**PHP 15L050RSB**
		48,51	16	1F	47,75	54	8	24	36,0	19,0	32,0	0,34	**PHP 16L050RSB**
		51,54	17	1F	50,78	57	10	24	38,0	19,0	32,0	0,38	**PHP 17L050RSB**
		54,57	18	1F	53,81	60	10	27	40,0	19,0	32,0	0,41	**PHP 18L050RSB**
		57,61	19	1F	56,85	63	10	27	40,0	19,0	32,0	0,45	**PHP 19L050RSB**
		60,64	20	1F	59,88	66	10	30	46,0	19,0	32,0	0,50	**PHP 20L050RSB**
		63,67	21	1F	62,91	69	10	30	46,0	19,0	32,0	0,55	**PHP 21L050RSB**
		66,70	22	1F	65,94	72	10	33	50,0	19,0	32,0	0,62	**PHP 22L050RSB**
		69,73	23	1F	68,97	78	10	33	50,0	19,0	26,0	0,65	**PHP 23L050RSB**
		72,77	24	1F	72,01	78	12	33	50,0	19,0	26,0	0,68	**PHP 24L050RSB**
		75,80	25	1F	75,04	85	12	33	50,0	19,0	26,0	0,74	**PHP 25L050RSB**
		78,83	26	1F	78,07	85	12	33	50,0	19,0	26,0	0,82	**PHP 26L050RSB**
		81,86	27	1F	81,10	91	12	33	50,0	19,0	26,0	0,85	**PHP 27L050RSB**
		84,89	28	1F	84,13	91	12	33	50,0	19,0	26,0	0,92	**PHP 28L050RSB**
		87,93	29	1F	87,17	91	12	33	50,0	19,0	26,0	1,00	**PHP 29L050RSB**
		90,96	30	1F	90,20	97	12	33	50,0	19,0	26,0	1,10	**PHP 30L050RSB**
		93,99	31	1F	93,23	103	12	33	50,0	19,0	26,0	1,14	**PHP 31L050RSB**

All XL pulleys are made from aluminium with 2 set screws at 90°. Where keyway is required, reduce maximum bore by twice keyway depth.

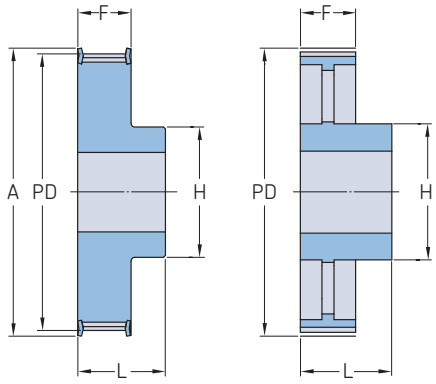

Type 1F Type 5

Section	Belt width	Pitch diameter PD	Number of teeth	Pulley type	Dimensions Outer diameter OD	A	B Min.	Max.	H	F	L	Mass	Designation
–	mm		–	–	mm							kg	–
L	**12,7**	97,02	32	1F	96,26	103	12	33	50,0	19,0	26,0	1,19	**PHP 32L050RSB**
		100,05	33	1F	99,29	106	12	33	50,0	19,0	26,0	1,25	**PHP 33L050RSB**
		103,08	34	1F	102,32	115	12	33	50,0	19,0	26,0	1,31	**PHP 34L050RSB**
		106,12	35	1F	105,36	115	12	33	50,0	19,0	26,0	1,37	**PHP 35L050RSB**
		109,15	36	1F	108,39	115	12	33	50,0	19,0	26,0	1,10	**PHP 36L050RSB**
		115,21	38	1F	114,45	127	12	33	50,0	19,0	26,0	1,22	**PHP 38L050RSB**
		121,28	40	1F	120,52	127	12	33	50,0	19,0	26,0	1,26	**PHP 40L050RSB**
		127,34	42	1F	126,58	139	12	33	50,0	19,0	26,0	1,31	**PHP 42L050RSB**
		133,40	44	1F	132,64	139	12	33	50,0	19,0	28,0	1,43	**PHP 44L050RSB**
		136,44	45	1F	135,68	152	12	33	50,0	19,0	28,0	1,49	**PHP 45L050RSB**
		145,53	48	1F	144,77	152	12	33	50,0	19,0	28,0	1,55	**PHP 48L050RSB**
		151,60	50	5	150,84	–	12	33	50,0	19,0	28,0	1,66	**PHP 50L050RSB**
		157,66	52	5	156,90	–	12	33	50,0	19,0	28,0	1,85	**PHP 52L050RSB**
		169,79	56	5	169,03	–	12	33	50,0	19,0	28,0	1,97	**PHP 56L050RSB**
		172,82	57	5	172,06	–	12	33	50,0	19,0	28,0	2,09	**PHP 57L050RSB**
		191,91	60	5	191,15	–	15	45	50,0	19,0	42,0	2,30	**PHP 60L050RSB**
		218,30	72	5	217,54	–	15	45	75,0	19,0	42,0	2,50	**PHP 72L050RSB**
		230,43	76	5	229,67	–	15	45	75,0	19,0	42,0	2,70	**PHP 76L050RSB**
		254,68	84	5	253,92	–	15	45	75,0	19,0	42,0	2,90	**PHP 84L050RSB**
		283,03	95	5	282,27	–	15	45	75,0	19,0	42,0	3,10	**PHP 95L050RSB**
		291,06	96	5	290,30	–	15	45	75,0	19,0	42,0	3,30	**PHP 96L050RSB**
L	**19,1**	30,32	10	1F	29,56	36	6	14	22,0	25,4	32,0	0,15	**PHP 10L075RSB**
		33,35	11	1F	32,59	39	6	14	22,0	25,4	32,0	0,20	**PHP 11L075RSB**
		36,38	12	1F	35,62	42	8	20	28,0	25,4	38,0	0,23	**PHP 12L075RSB**
		39,41	13	1F	38,65	45	8	20	28,0	25,4	38,0	0,26	**PHP 13L075RSB**
		42,45	14	1F	41,69	48	8	20	28,0	25,4	38,0	0,28	**PHP 14L075RSB**
		45,48	15	1F	44,72	51	8	23	32,0	25,4	38,0	0,36	**PHP 15L075RSB**
		48,51	16	1F	47,75	54	8	24	36,0	25,4	41,0	0,45	**PHP 16L075RSB**
		51,54	17	1F	50,78	57	10	24	38,0	25,4	41,0	0,50	**PHP 17L075RSB**
		54,57	18	1F	53,81	60	10	27	40,0	25,4	41,0	0,55	**PHP 18L075RSB**
		57,61	19	1F	56,85	63	10	27	40,0	25,4	41,0	0,60	**PHP 19L075RSB**
		60,64	20	1F	59,88	66	10	30	46,0	25,4	41,0	0,65	**PHP 20L075RSB**
		63,67	21	1F	62,91	69	10	30	46,0	25,4	41,0	0,70	**PHP 21L075RSB**
		66,70	22	1F	65,94	72	10	33	50,0	25,4	41,0	0,75	**PHP 22L075RSB**
		69,73	23	1F	68,97	78	10	33	50,0	25,4	32,0	0,81	**PHP 23L075RSB**
		72,77	24	1F	72,01	79	12	33	50,0	25,4	32,0	0,85	**PHP 24L075RSB**
		75,80	25	1F	75,04	85	12	33	50,0	25,4	32,0	0,94	**PHP 25L075RSB**
		78,83	26	1F	78,07	85	12	33	50,0	25,4	32,0	1,02	**PHP 26L075RSB**
		81,86	27	1F	81,10	91	12	33	50,0	25,4	32,0	1,09	**PHP 27L075RSB**
		84,89	28	1F	84,13	91	12	33	50,0	25,4	32,0	1,20	**PHP 28L075RSB**
		87,93	29	1F	87,17	91	12	33	50,0	25,4	32,0	1,33	**PHP 29L075RSB**
		90,96	30	1F	90,20	97	12	33	50,0	25,4	32,0	1,33	**PHP 30L075RSB**
		93,99	31	1F	93,23	103	12	33	50,0	25,4	32,0	1,39	**PHP 31L075RSB**
		97,02	32	1F	96,26	103	12	33	50,0	25,4	32,0	1,45	**PHP 32L075RSB**
		100,05	33	1F	99,29	106	12	33	50,0	25,4	32,0	1,56	**PHP 33L075RSB**
		103,08	34	1F	102,32	115	12	33	50,0	25,4	32,0	1,70	**PHP 34L075RSB**
		106,12	35	1F	105,36	115	12	33	50,0	25,4	32,0	1,78	**PHP 35L075RSB**
		109,15	36	1F	108,39	115	12	36	55,0	25,4	32,0	1,50	**PHP 36L075RSB**
		115,21	38	1F	114,45	127	12	36	55,0	25,4	32,0	1,63	**PHP 38L075RSB**
		121,28	40	1F	120,52	127	12	40	60,0	25,4	32,0	1,79	**PHP 40L075RSB**
		127,34	42	1F	126,58	139	12	40	60,0	25,4	32,0	1,95	**PHP 42L075RSB**
		133,40	44	1F	132,64	139	12	40	60,0	25,4	35,0	2,05	**PHP 44L075RSB**
		136,44	45	1F	135,68	152	12	40	60,0	25,4	35,0	2,10	**PHP 45L075RSB**

Section	Belt width	Pitch diameter PD	Number of teeth	Pulley type	Dimensions Outer diameter OD	A	B Min.	Max.	H	F	L	Mass	Designation
–	mm		–	–	mm							kg	–
L	**19,1**	145,53	48	1F	144,77	152	12	40	60,0	25,4	35,0	2,15	**PHP 48L075RSB**
		151,60	50	5	150,84	–	12	40	60,0	25,4	35,0	2,25	**PHP 50L075RSB**
		157,66	52	5	156,90	–	12	40	60,0	25,4	35,0	2,55	**PHP 52L075RSB**
		169,79	56	5	169,03	–	12	40	60,0	25,4	35,0	2,78	**PHP 56L075RSB**
		172,82	57	5	172,06	–	12	40	60,0	25,4	35,0	2,91	**PHP 57L075RSB**
		181,91	60	5	181,15	–	15	45	75,0	25,4	45,0	3,10	**PHP 60L075RSB**
		218,30	72	5	217,54	–	15	45	75,0	25,4	45,0	3,29	**PHP 72L075RSB**
		230,43	76	5	229,67	–	15	45	75,0	25,4	45,0	3,48	**PHP 76L075RSB**
		254,67	84	5	253,91	–	15	45	75,0	25,4	45,0	3,67	**PHP 84L075RSB**
		283,03	95	5	282,27	–	15	45	75,0	25,4	45,0	3,76	**PHP 95L075RSB**
		291,06	96	5	290,30	–	15	45	75,0	25,4	45,0	3,85	**PHP 96L075RSB**
		363,83	120	5	363,07	–	15	70	120,0	25,4	45,0	4,50	**PHP 120L075RSB**
L	**25,4**	30,32	10	1F	29,56	36	6	14	22,0	32,0	38,0	0,18	**PHP 10L100RSB**
		33,35	11	1F	32,59	39	6	14	22,0	32,0	38,0	0,20	**PHP 11L100RSB**
		36,38	12	1F	35,62	42	8	20	28,0	32,0	45,0	0,25	**PHP 12L100RSB**
		39,41	13	1F	38,65	45	8	20	28,0	32,0	45,0	0,30	**PHP 13L100RSB**
		42,45	14	1F	41,69	48	8	20	28,0	32,0	45,0	0,34	**PHP 14L100RSB**
		45,48	15	1F	44,72	51	8	23	32,0	32,0	45,0	0,40	**PHP 15L100RSB**
		48,51	16	1F	47,75	54	8	24	36,0	32,0	45,0	0,48	**PHP 16L100RSB**
		51,54	17	1F	50,78	57	10	24	38,0	32,0	45,0	0,57	**PHP 17L100RSB**
		54,57	18	1F	53,81	60	10	27	40,0	32,0	45,0	0,62	**PHP 18L100RSB**
		57,61	19	1F	56,85	63	10	27	40,0	32,0	45,0	0,69	**PHP 19L100RSB**
		60,64	20	1F	59,88	66	10	30	46,0	32,0	45,0	0,76	**PHP 20L100RSB**
		63,67	21	1F	62,91	69	10	30	46,0	32,0	45,0	0,82	**PHP 21L100RSB**
		66,70	22	1F	65,94	72	10	33	50,0	32,0	45,0	0,92	**PHP 22L100RSB**
		69,73	23	1F	68,97	78	10	33	50,0	32,0	38,0	0,98	**PHP 23L100RSB**
		72,77	24	1F	72,01	78	12	33	50,0	32,0	38,0	1,06	**PHP 24L100RSB**
		75,80	25	1F	75,04	85	12	33	50,0	32,0	38,0	1,14	**PHP 25L100RSB**
		78,83	26	1F	78,07	85	12	33	50,0	32,0	38,0	1,24	**PHP 26L100RSB**
		81,86	27	1F	81,10	91	12	33	50,0	32,0	38,0	1,33	**PHP 27L100RSB**
		84,89	28	1F	84,13	91	12	33	50,0	32,0	38,0	1,40	**PHP 28L100RSB**
		87,93	29	1F	87,17	91	12	33	50,0	32,0	38,0	1,70	**PHP 29L100RSB**
		90,96	30	1F	90,20	97	12	33	50,0	32,0	38,0	1,70	**PHP 30L100RSB**
		97,02	32	1F	96,26	103	12	33	50,0	32,0	38,0	1,80	**PHP 32L100RSB**
		100,05	33	1F	99,29	106	12	33	50,0	32,0	38,0	1,92	**PHP 33L100RSB**
		103,08	34	1F	102,32	115	12	33	50,0	32,0	38,0	2,09	**PHP 34L100RSB**
		106,12	35	1F	105,36	115	12	33	50,0	32,0	38,0	2,19	**PHP 35L100RSB**
		109,15	36	1F	108,39	115	12	36	55,0	32,0	32,0	1,50	**PHP 36L100RSB**
		115,21	38	1F	114,45	127	12	36	55,0	32,0	32,0	1,77	**PHP 38L100RSB**
		121,28	40	1F	120,52	127	12	40	60,0	32,0	32,0	1,90	**PHP 40L100RSB**
		127,34	42	1F	126,58	139	12	40	60,0	32,0	32,0	2,11	**PHP 42L100RSB**
		133,40	44	1F	132,64	139	12	40	60,0	32,0	35,0	2,30	**PHP 44L100RSB**
		136,44	45	1F	135,68	152	12	40	60,0	32,0	35,0	2,40	**PHP 45L100RSB**
		145,53	48	1F	144,77	152	12	40	60,0	32,0	35,0	2,49	**PHP 48L100RSB**
		151,60	50	5	150,84	–	12	40	60,0	32,0	35,0	2,68	**PHP 50L100RSB**
		157,66	52	5	156,90	–	12	40	60,0	32,0	35,0	2,87	**PHP 52L100RSB**
		169,79	56	5	169,03	–	12	40	60,0	32,0	35,0	3,06	**PHP 56L100RSB**
		172,82	57	5	172,06	–	12	40	60,0	32,0	35,0	3,25	**PHP 57L100RSB**
		191,91	60	5	191,15	–	15	45	75,0	32,0	45,0	3,44	**PHP 60L100RSB**
		218,30	72	5	217,54	–	15	45	75,0	32,0	45,0	3,63	**PHP 72L100RSB**
		230,43	76	5	229,67	–	15	45	75,0	32,0	45,0	3,82	**PHP 76L100RSB**
		254,68	84	5	253,92	–	15	45	75,0	32,0	45,0	4,01	**PHP 84L100RSB**
		283,03	95	5	282,27	–	15	45	75,0	32,0	45,0	4,11	**PHP 95L100RSB**
		291,06	96	5	290,30	–	15	45	75,0	32,0	45,0	4,20	**PHP 96L100RSB**
		363,83	120	5	363,07	–	15	70	120,0	32,0	45,0	5,00	**PHP 120L100RSB**
H	**19,1**	56,60	14	1F	55,23	63	10	27	40,0	27,0	40,0	0,50	**PHP 14H075RSB**
		60,64	15	1F	59,27	67	10	30	46,0	27,0	40,0	0,55	**PHP 15H075RSB**
		64,68	16	1F	63,31	71	10	30	45,0	27,0	40,0	0,60	**PHP 16H075RSB**
		68,72	17	1F	67,35	75	10	30	46,0	27,0	40,0	0,70	**PHP 17H075RSB**
		72,77	18	1F	71,40	79	12	36	55,0	27,0	40,0	0,80	**PHP 18H075RSB**
		76,81	19	1F	75,44	83	12	40	60,0	27,0	40,0	1,00	**PHP 19H075RSB**
		80,85	20	1F	79,48	87	12	41	62,0	27,0	40,0	1,10	**PHP 20H075RSB**
		84,89	21	1F	83,52	91	12	43	67,0	27,0	40,0	1,20	**PHP 21H075RSB**
		88,94	22	1F	87,57	95	12	45	70,0	27,0	40,0	1,40	**PHP 22H075RSB**
		92,98	23	1F	91,61	98	12	46	72,0	27,0	40,0	1,50	**PHP 23H075RSB**
		97,02	24	1F	95,65	103	12	47	75,0	27,0	40,0	1,60	**PHP 24H075RSB**
		101,06	25	1F	99,69	107	12	47	75,0	27,0	40,0	1,70	**PHP 25H075RSB**
		105,11	26	1F	103,74	111	15	54	80,0	27,0	40,0	1,80	**PHP 26H075RSB**
		109,15	27	1F	107,78	115	15	54	80,0	27,0	40,0	1,90	**PHP 27H075RSB**
		113,19	28	1F	111,82	119	15	54	80,0	27,0	40,0	2,00	**PHP 28H075RSB**
		117,23	29	1F	115,86	123	15	54	80,0	27,0	40,0	2,05	**PHP 29H075RSB**
		121,28	30	1F	119,91	127	15	54	80,0	27,0	40,0	2,10	**PHP 30H075RSB**
		125,32	31	1F	123,95	131	15	54	80,0	27,0	40,0	2,15	**PHP 31H075RSB**

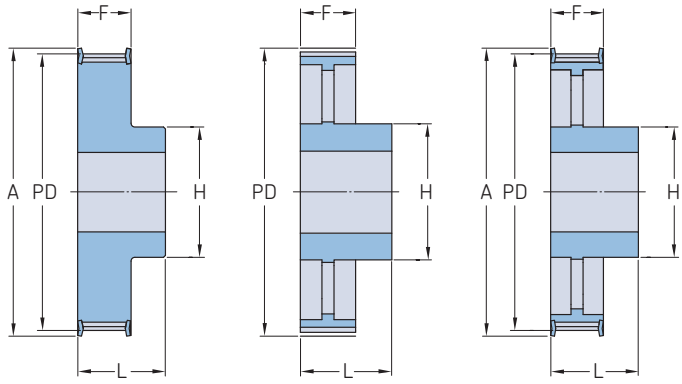

Type 1F Type 5 Type 5F

Section	Belt width	Pitch diameter PD	Number of teeth	Pulley type	Dimensions Outer diameter OD	A	B Min.	Max.	H	F	L	Mass	Designation
–	mm		–	–	mm							kg	–
H	**19,1**	129,36	32	1F	127,99	135	15	54	80,0	27,0	40,0	2,20	**PHP 32H075RSB**
		133,40	33	1F	132,03	142	15	54	80,0	27,0	40,0	2,25	**PHP 33H075RSB**
		137,45	34	1F	136,08	142	15	54	80,0	27,0	40,0	2,30	**PHP 34H075RSB**
		141,49	35	1F	140,12	151	15	54	80,0	27,0	40,0	2,35	**PHP 35H075RSB**
		145,53	36	1F	144,16	151	20	54	80,0	27,0	40,0	2,40	**PHP 36H075RSB**
		153,62	38	1F	152,25	158	20	54	80,0	27,0	40,0	2,60	**PHP 38H075RSB**
		161,70	40	1F	160,33	168	20	54	80,0	27,0	40,0	2,80	**PHP 40H075RSB**
		169,79	42	1F	168,42	184	20	54	80,0	27,0	40,0	2,90	**PHP 42H075RSB**
		177,87	44	5F	176,50	184	20	48	80,0	27,0	40,0	2,70	**PHP 44H075RSB**
		181,91	45	5F	180,54	192	20	54	90,0	27,0	45,0	2,85	**PHP 45H075RSB**
		194,04	48	5F	192,67	200	20	54	90,0	27,0	45,0	3,00	**PHP 48H075RSB**
		202,13	50	5	200,76	–	20	54	90,0	27,0	45,0	3,25	**PHP 50H075RSB**
H	**19,1 and 25,4**	56,60	14	1F	55,23	63	10	27	40,0	33,3	45,0	0,65	**PHP 14H100RSB**
		60,64	15	1F	59,27	67	10	30	46,0	33,3	45,0	0,75	**PHP 15H100RSB**
		64,67	16	1F	63,30	71	10	30	46,0	33,3	45,0	0,85	**PHP 16H100RSB**
		68,72	17	1F	67,35	75	10	30	46,0	33,3	45,0	0,97	**PHP 17H100RSB**
		72,77	18	1F	71,40	79	12	30	55,0	33,3	45,0	1,10	**PHP 18H100RSB**
		76,81	19	1F	75,44	83	12	36	60,0	33,3	45,0	1,20	**PHP 19H100RSB**
		80,85	20	1F	79,48	87	12	41	62,0	33,3	45,0	1,40	**PHP 20H100RSB**
		84,89	21	1F	83,52	91	12	43	67,0	33,3	45,0	1,60	**PHP 21H100RSB**
		88,94	22	1F	87,57	95	12	45	70,0	33,3	45,0	1,70	**PHP 22H100RSB**
		92,98	23	1F	91,61	98	12	46	72,0	33,3	45,0	1,83	**PHP 23H100RSB**
		97,03	24	1F	95,66	103	12	47	75,0	33,3	45,0	1,95	**PHP 24H100RSB**
		101,06	25	1F	99,69	107	12	47	75,0	33,3	45,0	2,19	**PHP 25H100RSB**
		105,11	26	1F	103,74	111	15	54	80,0	33,3	45,0	2,43	**PHP 26H100RSB**
		109,15	27	1F	107,78	115	15	54	80,0	33,3	45,0	2,57	**PHP 27H100RSB**
		113,18	28	1F	111,81	119	15	54	80,0	33,3	45,0	2,70	**PHP 28H100RSB**
		117,23	29	1F	115,86	123	15	54	80,0	33,3	45,0	2,95	**PHP 29H100RSB**
		121,29	30	1F	119,92	127	15	54	80,0	33,3	45,0	3,20	**PHP 30H100RSB**
		125,32	31	1F	123,95	131	15	54	80,0	33,3	45,0	3,35	**PHP 31H100RSB**
		129,36	32	1F	127,99	135	20	54	80,0	33,3	45,0	3,50	**PHP 32H100RSB**
		133,40	33	1F	132,03	142	20	54	80,0	33,3	45,0	3,78	**PHP 33H100RSB**
		137,45	34	1F	136,08	142	20	54	80,0	33,3	45,0	4,05	**PHP 34H100RSB**
		141,49	35	1F	140,12	151	20	54	80,0	33,3	45,0	4,35	**PHP 35H100RSB**
		145,53	36	1F	144,16	151	20	54	80,0	33,3	45,0	4,65	**PHP 36H100RSB**
		153,62	38	1F	152,25	158	20	54	80,0	33,3	45,0	4,98	**PHP 38H100RSB**
		161,70	40	1F	160,33	168	20	54	80,0	33,3	45,0	5,30	**PHP 40H100RSB**
		169,79	42	1F	168,42	184	20	54	80,0	33,3	45,0	5,50	**PHP 42H100RSB**
		177,87	44	5F	176,50	184	20	48	80,0	33,3	50,0	4,00	**PHP 44H100RSB**
		181,91	45	5F	180,54	192	20	54	80,0	33,3	50,0	4,25	**PHP 45H100RSB**
		194,03	48	5F	192,66	200	20	54	90,0	33,3	50,0	4,50	**PHP 48H100RSB**
		202,13	50	5	200,76	–	20	54	90,0	33,3	50,0	4,94	**PHP 50H100RSB**
		210,21	52	5	208,84	–	20	54	90,0	33,3	50,0	5,38	**PHP 52H100RSB**
		230,42	57	5	229,05	–	20	54	90,0	33,3	50,0	5,82	**PHP 57H100RSB**
		234,47	58	5	233,10	–	20	54	90,0	33,3	50,0	5,82	**PHP 58H100RSB**
		242,55	60	5	241,18	–	20	70	120,0	33,3	50,0	6,25	**PHP 60H100RSB**
		282,98	70	5	281,61	–	20	70	120,0	33,3	55,0	7,55	**PHP 70H100RSB**
		291,06	72	5	289,69	–	20	70	120,0	33,3	55,0	8,85	**PHP 72H100RSB**
		307,23	76	5	305,86	–	20	70	120,0	33,3	55,0	9,43	**PHP 76H100RSB**
		339,57	84	5	338,20	–	20	70	120,0	33,3	55,0	10,00	**PHP 84H100RSB**
		388,08	96	5	386,71	–	24	70	120,0	33,3	60,0	10,48	**PHP 96H100RSB**
		485,10	120	5	483,73	–	24	70	120,0	33,3	60,0	13,10	**PHP 120H100RSB**
		630,63	156	5	629,26	–	24	70	130,0	33,3	60,0	17,20	**PHP 156H100RSB**

Section	Belt width	Pitch diameter	Number of teeth	Pulley type	Dimensions Outer diameter							Mass	Designation
		PD			OD	A	B Min.	Max.	H	F	L		
–	mm		–	–	mm							kg	–
H	**38,1**	56,60	14	1F	55,23	63	12	27	40,0	46,0	58,0	0,82	**PHP 14H150RSB**
		60,64	15	1F	59,27	67	12	30	46,0	46,0	58,0	0,96	**PHP 15H150RSB**
		64,67	16	1F	63,30	71	12	30	46,0	46,0	58,0	1,10	**PHP 16H150RSB**
		68,72	17	1F	67,35	75	12	30	46,0	46,0	58,0	1,30	**PHP 17H150RSB**
		72,77	18	1F	71,40	79	12	30	55,0	46,0	58,0	1,50	**PHP 18H150RSB**
		76,81	19	1F	75,44	83	12	36	60,0	46,0	58,0	1,70	**PHP 19H150RSB**
		80,85	20	1F	79,48	87	12	41	62,0	46,0	58,0	1,80	**PHP 20H150RSB**
		84,89	21	1F	83,52	91	12	43	67,0	46,0	58,0	2,20	**PHP 21H150RSB**
		88,94	22	1F	87,57	95	12	45	70,0	46,0	58,0	2,30	**PHP 22H150RSB**
		92,98	23	1F	91,61	98	12	46	72,0	46,0	58,0	2,45	**PHP 23H150RSB**
		97,03	24	1F	95,66	103	12	47	75,0	46,0	58,0	2,60	**PHP 24H150RSB**
		101,06	25	1F	99,69	107	12	47	75,0	46,0	58,0	2,90	**PHP 25H150RSB**
		105,11	26	1F	103,74	111	15	54	80,0	46,0	58,0	3,20	**PHP 26H150RSB**
		109,15	27	1F	107,78	115	15	54	80,0	46,0	58,0	3,30	**PHP 27H150RSB**
		113,18	28	1F	111,81	119	15	54	80,0	46,0	58,0	3,39	**PHP 28H150RSB**
		117,23	29	1F	115,86	123	15	54	80,0	46,0	58,0	3,75	**PHP 29H150RSB**
		121,29	30	1F	119,92	127	15	54	80,0	46,0	58,0	4,10	**PHP 30H150RSB**
		125,32	31	1F	123,95	131	15	54	80,0	46,0	58,0	4,43	**PHP 31H150RSB**
		129,36	32	1F	127,99	135	20	54	80,0	46,0	58,0	4,77	**PHP 32H150RSB**
		133,40	33	1F	132,03	142	20	54	80,0	46,0	58,0	5,08	**PHP 33H150RSB**
		137,45	34	1F	136,08	142	20	54	80,0	46,0	58,0	5,40	**PHP 34H150RSB**
		141,49	35	1F	140,12	151	20	54	80,0	46,0	58,0	5,71	**PHP 35H150RSB**
		145,53	36	1F	144,16	151	20	54	80,0	46,0	58,0	6,02	**PHP 36H150RSB**
		153,62	38	1F	152,25	158	20	54	80,0	46,0	58,0	6,76	**PHP 38H150RSB**
		161,70	40	1F	160,33	168	20	54	80,0	46,0	58,0	7,50	**PHP 40H150RSB**
		169,79	42	1F	168,42	184	20	54	80,0	46,0	58,0	8,00	**PHP 42H150RSB**
		177,87	44	5F	176,50	184	20	48	80,0	46,0	58,0	5,00	**PHP 44H150RSB**
		181,91	45	5F	180,54	192	20	48	80,0	46,0	58,0	5,05	**PHP 45H150RSB**
		194,03	48	5F	192,66	200	20	54	90,0	46,0	65,0	5,10	**PHP 48H150RSB**
		202,13	50	5	200,76	–	20	54	90,0	46,0	65,0	5,75	**PHP 50H150RSB**
		210,21	52	5	208,84	–	20	54	90,0	46,0	65,0	6,40	**PHP 52H150RSB**
		230,43	57	5	229,06	–	20	54	90,0	46,0	65,0	6,75	**PHP 57H150RSB**
		234,47	58	5	233,10	–	20	54	90,0	46,0	65,0	7,05	**PHP 58H150RSB**
		242,55	60	5	241,18	–	20	70	120,0	46,0	65,0	7,70	**PHP 60H150RSB**
		282,98	70	5	281,61	–	20	70	120,0	46,0	65,0	8,20	**PHP 70H150RSB**
		291,06	72	5	289,69	–	20	70	120,0	46,0	65,0	8,70	**PHP 72H150RSB**
		307,23	76	5	305,86	–	20	70	120,0	46,0	65,0	9,67	**PHP 76H150RSB**
		339,57	84	5	338,20	–	20	70	120,0	46,0	65,0	10,64	**PHP 84H150RSB**
		388,08	96	5	386,71	–	24	70	120,0	46,0	65,0	13,40	**PHP 96H150RSB**
		485,10	120	5	483,73	–	24	70	120,0	46,0	65,0	15,70	**PHP 120H150RSB**
		630,63	156	5	629,26	–	24	70	130,0	46,0	65,0	19,10	**PHP 156H150RSB**
H	**50,8**	56,60	14	1F	55,23	63	12	27	40,0	59,5	70,0	1,25	**PHP 14H200RSB**
		60,64	15	1F	59,27	67	12	30	46,0	59,5	70,0	1,33	**PHP 15H200RSB**
		64,67	16	1F	63,30	71	12	30	46,0	59,5	70,0	1,40	**PHP 16H200RSB**
		68,72	17	1F	67,35	75	12	30	46,0	59,5	70,0	1,67	**PHP 17H200RSB**
		72,77	18	1F	71,40	79	12	30	55,0	59,5	70,0	1,94	**PHP 18H200RSB**
		76,81	19	1F	75,44	83	12	36	60,0	59,5	70,0	2,18	**PHP 19H200RSB**
		80,85	20	1F	79,48	87	12	41	62,0	59,5	70,0	2,43	**PHP 20H200RSB**
		84,89	21	1F	83,52	91	12	43	67,0	59,5	70,0	2,60	**PHP 21H200RSB**
		88,94	22	1F	87,57	95	12	45	70,0	59,5	70,0	2,80	**PHP 22H200RSB**
		92,98	23	1F	91,61	98	12	46	72,0	59,5	70,0	2,89	**PHP 23H200RSB**
		97,03	24	1F	95,66	103	12	47	75,0	59,5	70,0	2,97	**PHP 24H200RSB**
		101,06	25	1F	99,69	107	12	47	75,0	59,5	70,0	2,89	**PHP 25H200RSB**
		105,11	26	1F	103,74	111	15	54	80,0	59,5	70,0	3,90	**PHP 26H200RSB**
		109,15	27	1F	107,78	115	15	54	80,0	59,5	70,0	3,44	**PHP 27H200RSB**
		113,18	28	1F	111,81	119	15	54	80,0	59,5	70,0	4,60	**PHP 28H200RSB**
		117,23	29	1F	115,86	123	15	54	80,0	59,5	70,0	4,80	**PHP 29H200RSB**
		121,29	30	1F	119,92	127	15	54	80,0	59,5	70,0	5,00	**PHP 30H200RSB**
		125,32	31	1F	123,95	131	15	54	80,0	59,5	70,0	5,47	**PHP 31H200RSB**
		129,36	32	1F	127,99	135	20	54	80,0	59,5	70,0	5,93	**PHP 32H200RSB**
		133,40	33	1F	132,03	142	20	54	80,0	59,5	70,0	6,33	**PHP 33H200RSB**
		137,45	34	1F	136,08	142	20	54	80,0	59,5	70,0	6,73	**PHP 34H200RSB**
		141,49	35	1F	140,12	151	20	54	80,0	59,5	70,0	7,13	**PHP 35H200RSB**
		145,53	36	1F	144,16	151	20	54	80,0	59,5	70,0	7,53	**PHP 36H200RSB**
		153,62	38	1F	152,25	158	20	54	80,0	59,5	70,0	8,32	**PHP 38H200RSB**
		161,70	40	1F	160,33	168	20	54	80,0	59,5	70,0	9,11	**PHP 40H200RSB**
		169,79	42	1F	168,42	184	20	54	80,0	59,5	70,0	9,70	**PHP 42H200RSB**
		177,87	44	5F	176,50	184	20	48	80,0	59,5	70,0	5,00	**PHP 44H200RSB**
		181,91	45	5F	180,54	192	20	48	80,0	59,5	70,0	5,37	**PHP 45H200RSB**
		194,03	48	5F	192,66	200	20	54	90,0	59,5	75,0	5,73	**PHP 48H200RSB**
		202,13	50	5	200,76	–	20	54	90,0	59,5	75,0	6,62	**PHP 50H200RSB**
		210,21	52	5	208,84	–	20	54	90,0	59,5	75,0	7,50	**PHP 52H200RSB**
		230,43	57	5	229,06	–	20	54	90,0	59,5	75,0	8,76	**PHP 57H200RSB**

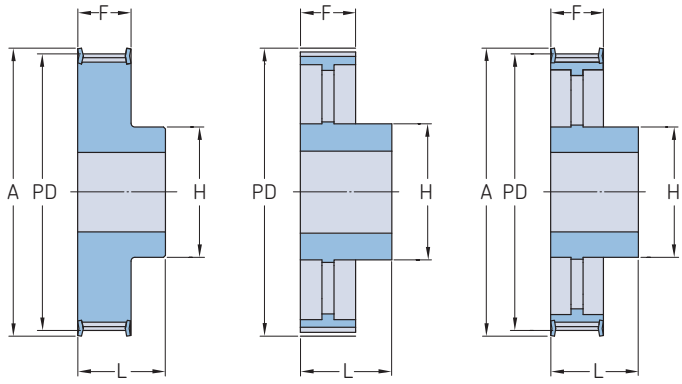

Type 1F Type 5 Type 5F

Section	Belt width	Pitch diameter PD	Number of teeth	Pulley type	Dimensions Outer diameter OD	A	B Min.	Max.	H	F	L	Mass	Designation
–	mm		–	–	mm							kg	–
H	**50,8**	234,47	58	5	233,10	–	20	54	90,0	59,5	75,0	8,39	**PHP 58H200RSB**
		242,55	60	5	241,18	–	20	70	120,0	59,5	75,0	9,27	**PHP 60H200RSB**
		282,98	70	5	281,61	–	20	70	120,0	59,5	75,0	9,80	**PHP 70H200RSB**
		291,06	72	5	289,69	–	20	70	120,0	59,5	75,0	10,32	**PHP 72H200RSB**
		307,23	76	5	305,86	–	20	70	120,0	59,5	75,0	11,41	**PHP 76H200RSB**
		339,57	84	5	338,20	–	20	70	120,0	59,5	75,0	12,50	**PHP 84H200RSB**
		388,08	96	5	386,71	–	24	70	120,0	59,5	75,0	14,00	**PHP 96H200RSB**
		485,10	120	5	483,73	–	24	70	120,0	59,5	75,0	18,10	**PHP 120H200RSB**
		630,63	156	5	629,26	–	24	70	130,0	59,5	75,0	22,00	**PHP 156H200RSB**
H	**76,2**	56,60	14	1F	55,23	63	14	27	40,0	85,5	100,0	1,80	**PHP 14H300RSB**
		60,64	15	1F	59,27	67	14	30	46,0	85,5	100,0	1,90	**PHP 15H300RSB**
		64,67	16	1F	63,30	71	14	30	46,0	85,5	100,0	2,00	**PHP 16H300RSB**
		68,72	17	1F	67,35	75	14	30	46,0	85,5	100,0	2,24	**PHP 17H300RSB**
		72,77	18	1F	71,40	79	14	30	55,0	85,5	100,0	2,47	**PHP 18H300RSB**
		76,81	19	1F	75,44	83	14	36	60,0	85,5	100,0	2,90	**PHP 19H300RSB**
		80,85	20	1F	79,48	87	15	41	62,0	85,5	100,0	3,20	**PHP 20H300RSB**
		84,89	21	1F	83,52	91	15	43	67,0	85,5	100,0	3,60	**PHP 21H300RSB**
		88,94	22	1F	87,57	95	15	45	70,0	85,5	100,0	4,00	**PHP 22H300RSB**
		92,98	23	1F	91,61	98	15	46	72,0	85,5	100,0	4,35	**PHP 23H300RSB**
		97,03	24	1F	95,66	103	15	47	75,0	85,5	100,0	4,70	**PHP 24H300RSB**
		101,06	25	1F	99,69	107	15	47	75,0	85,5	100,0	5,24	**PHP 25H300RSB**
		105,11	26	1F	103,74	111	15	54	80,0	85,5	100,0	5,78	**PHP 26H300RSB**
		109,15	27	1F	107,78	115	15	54	80,0	85,5	100,0	6,16	**PHP 27H300RSB**
		113,18	28	1F	111,81	119	15	54	80,0	85,5	100,0	6,54	**PHP 28H300RSB**
		117,23	29	1F	115,86	123	15	54	80,0	85,5	100,0	6,77	**PHP 29H300RSB**
		121,29	30	1F	119,92	127	15	54	80,0	85,5	100,0	7,00	**PHP 30H300RSB**
		125,32	31	1F	123,95	131	15	54	80,0	85,5	100,0	7,83	**PHP 31H300RSB**
		129,36	32	1F	127,99	135	20	54	80,0	85,5	100,0	8,66	**PHP 32H300RSB**
		133,40	33	1F	132,03	142	20	54	80,0	85,5	100,0	9,23	**PHP 33H300RSB**
		137,45	34	1F	136,08	142	20	54	80,0	85,5	100,0	9,79	**PHP 34H300RSB**
		141,47	35	1F	140,10	151	20	54	80,0	85,5	100,0	10,36	**PHP 35H300RSB**
		145,53	36	1F	144,16	151	20	54	80,0	85,5	100,0	10,92	**PHP 36H300RSB**
		153,62	38	1F	152,25	158	20	54	80,0	85,5	100,0	12,20	**PHP 38H300RSB**
		161,70	40	1F	160,33	168	20	54	80,0	85,5	100,0	13,50	**PHP 40H300RSB**
		169,79	42	1F	168,42	184	20	54	80,0	85,5	100,0	14,50	**PHP 42H300RSB**
		177,87	44	5F	176,50	184	20	48	80,0	85,5	100,0	8,06	**PHP 44H300RSB**
		194,03	48	5F	192,66	200	20	54	90,0	85,5	100,0	9,67	**PHP 48H300RSB**
		202,13	50	5	200,76	–	20	54	90,0	85,5	100,0	10,87	**PHP 50H300RSB**
		230,43	57	5	229,06	–	20	54	90,0	85,5	100,0	11,92	**PHP 57H300RSB**
		234,47	58	5	233,10	–	20	54	90,0	85,5	100,0	12,07	**PHP 58H300RSB**
		242,55	60	5	241,18	–	20	70	120,0	85,5	100,0	13,30	**PHP 60H300RSB**
		291,06	72	5	289,69	–	20	70	120,0	85,5	100,0	15,70	**PHP 72H300RSB**
		307,24	76	5	305,87	–	20	70	120,0	85,5	100,0	16,17	**PHP 76H300RSB**
		339,57	84	5	338,20	–	20	70	120,0	85,5	100,0	17,10	**PHP 84H300RSB**
		388,09	96	5	386,72	–	24	70	120,0	85,5	100,0	20,40	**PHP 96H300RSB**
		485,12	120	5	483,75	–	24	70	120,0	85,5	100,0	27,80	**PHP 120H300RSB**
		630,63	156	5	629,26	–	24	70	130,0	85,5	100,0	35,00	**PHP 156H300RSB**
XH	**50,8**	127,34	18	1F	124,54	141	24	67	100,0	65,1	80,0	5,00	**PHP 18XH200RSB**
		134,41	19	1F	131,61	146	24	67	100,0	65,1	80,0	5,50	**PHP 19XH200RSB**
		141,49	20	1F	138,69	155	24	67	100,0	65,1	80,0	6,00	**PHP 20XH200RSB**
		148,56	21	1F	145,76	169	24	73	110,0	65,1	80,0	6,60	**PHP 21XH200RSB**
		155,64	22	1F	152,84	169	24	73	110,0	65,1	80,0	7,20	**PHP 22XH200RSB**
		169,79	24	1F	166,99	183	24	80	120,0	65,1	80,0	8,60	**PHP 24XH200RSB**

Section	Belt width	Pitch diameter	Number of teeth	Pulley type	Dimensions Outer diameter							Mass	Designation
		PD			OD	A	B Min.	Max.	H	F	L		
–	mm		–	–	mm							kg	–
XH	**50,8**	176,86	25	1F	174,06	198	24	80	120,0	65,1	80,0	9,40	**PHP 25XH200RSB**
		183,93	26	1F	181,13	198	24	80	120,0	65,1	80,0	9,70	**PHP 26XH200RSB**
		191,01	27	1F	188,21	212	24	80	120,0	65,1	80,0	9,90	**PHP 27XH200RSB**
		198,09	28	1F	195,29	212	24	80	120,0	65,1	80,0	10,00	**PHP 28XH200RSB**
		212,23	30	1F	209,43	226	24	80	120,0	65,1	80,0	10,40	**PHP 30XH200RSB**
		226,38	32	1F	223,58	240	24	80	120,0	65,1	80,0	11,20	**PHP 32XH200RSB**
		240,53	34	1F	237,73	256	24	80	120,0	65,1	80,0	12,60	**PHP 34XH200RSB**
		268,83	38	5	266,03	–	28	100	150,0	65,1	80,0	14,60	**PHP 38XH200RSB**
		282,98	40	5	280,18	–	28	100	150,0	65,1	100,0	16,00	**PHP 40XH200RSB**
		339,57	48	5	336,77	–	28	100	150,0	65,1	100,0	18,40	**PHP 48XH200RSB**
		424,47	60	5	421,67	–	28	100	150,0	65,1	100,0	24,30	**PHP 60XH200RSB**
XH	**76,2**	127,34	18	1F	124,54	141	28	67	100,0	92,1	110,0	6,80	**PHP 18XH300RSB**
		134,41	19	1F	131,61	146	28	67	100,0	92,1	110,0	7,10	**PHP 19XH300RSB**
		141,49	20	1F	138,69	155	28	67	100,0	92,1	110,0	7,40	**PHP 20XH300RSB**
		148,56	21	1F	145,76	169	28	73	110,0	92,1	110,0	8,20	**PHP 21XH300RSB**
		155,64	22	1F	152,84	169	28	73	110,0	92,1	110,0	9,00	**PHP 22XH300RSB**
		169,79	24	1F	166,99	183	28	80	120,0	92,1	110,0	10,60	**PHP 24XH300RSB**
		176,86	25	1F	174,06	198	28	80	120,0	92,1	110,0	11,80	**PHP 25XH300RSB**
		183,93	26	1F	181,13	198	28	80	120,0	92,1	110,0	12,00	**PHP 26XH300RSB**
		191,01	27	1F	188,21	212	28	80	120,0	92,1	110,0	12,50	**PHP 27XH300RSB**
		198,09	28	1F	195,29	212	28	80	150,0	92,1	110,0	13,00	**PHP 28XH300RSB**
		212,23	30	1F	209,43	226	28	80	150,0	92,1	110,0	13,75	**PHP 30XH300RSB**
		226,38	32	1F	223,58	240	28	80	150,0	92,1	110,0	14,70	**PHP 32XH300RSB**
		240,53	34	1F	237,73	256	28	80	150,0	92,1	110,0	16,30	**PHP 34XH300RSB**
		268,83	38	5	266,03	–	32	100	150,0	92,1	120,0	18,30	**PHP 38XH300RSB**
		282,98	40	5	280,18	–	32	100	150,0	92,1	120,0	19,90	**PHP 40XH300RSB**
		339,57	48	5	336,77	–	32	100	175,0	92,1	120,0	22,50	**PHP 48XH300RSB**
		424,47	60	5	421,67	–	32	100	175,0	92,1	120,0	31,50	**PHP 60XH300RSB**
XH	**101,6**	127,34	18	1F	124,54	141	32	67	100,0	119,0	132,0	8,50	**PHP 18XH400RSB**
		134,41	19	1F	131,61	146	32	67	100,0	119,0	132,0	9,00	**PHP 19XH400RSB**
		141,49	20	1F	138,69	155	32	67	100,0	119,0	132,0	9,40	**PHP 20XH400RSB**
		148,56	21	1F	145,76	169	32	73	110,0	119,0	132,0	10,50	**PHP 21XH400RSB**
		155,64	22	1F	152,84	169	32	73	110,0	119,0	132,0	11,50	**PHP 22XH400RSB**
		169,79	24	1F	166,99	183	32	80	120,0	119,0	132,0	13,40	**PHP 24XH400RSB**
		176,86	25	1F	174,06	198	32	80	120,0	119,0	132,0	14,50	**PHP 25XH400RSB**
		183,93	26	1F	181,13	198	32	80	120,0	119,0	132,0	15,60	**PHP 26XH400RSB**
		191,01	27	1F	188,21	212	32	80	120,0	119,0	132,0	15,10	**PHP 27XH400RSB**
		198,09	28	1F	195,29	212	32	100	150,0	119,0	132,0	14,50	**PHP 28XH400RSB**
		212,23	30	1F	209,43	227	32	100	150,0	119,0	132,0	16,00	**PHP 30XH400RSB**
		226,38	32	1F	223,58	240	32	100	150,0	119,0	132,0	18,00	**PHP 32XH400RSB**
		240,53	34	1F	237,73	256	32	100	150,0	119,0	132,0	20,00	**PHP 34XH400RSB**
		268,83	38	5	266,03	–	32	100	150,0	119,0	132,0	22,00	**PHP 38XH400RSB**
		282,98	40	5	280,18	–	32	100	150,0	119,0	132,0	24,00	**PHP 40XH400RSB**
		339,57	48	5	336,77	–	32	110	175,0	119,0	132,0	30,80	**PHP 48XH400RSB**
		424,47	60	5	421,67	–	32	110	175,0	119,0	132,0	36,20	**PHP 60XH400RSB**

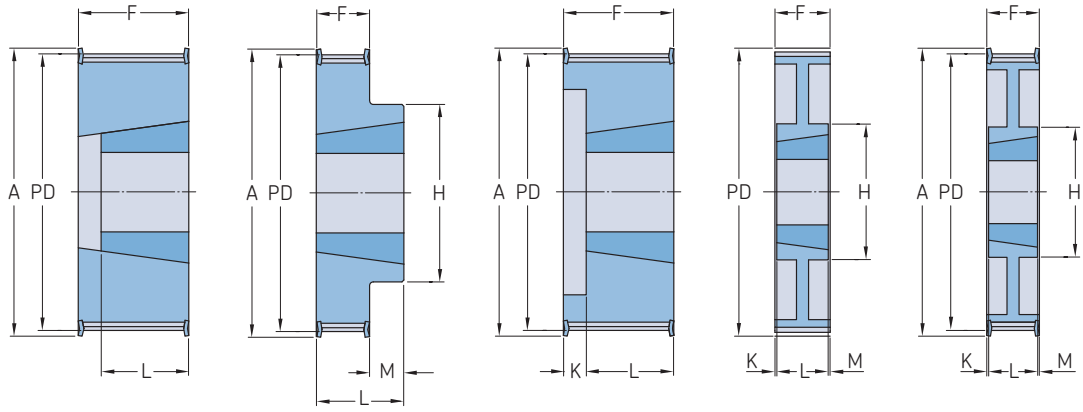

Section	Belt width	Pitch diameter PD	Number of teeth	Pulley type	Bushing number	Dimensions Outer diameter OD	A	B Min.	Max.	F	K	L	M	H	Mass*	Designation
–	mm		–	–	–	mm									kg	–
L	**12,7**	54,57	18	3F	1108	53,81	60	9	28	19,1	–	22	3,0	45	0,18	**PHP 18L050TB**
		57,61	19	3F	1108	56,85	63	9	28	19,1	–	22	3,0	45	0,21	**PHP 19L050TB**
		60,64	20	3F	1108	59,88	66	9	28	19,1	–	22	3,0	47	0,24	**PHP 20L050TB**
		63,67	21	3F	1108	62,91	69	9	28	19,1	–	22	3,0	49	0,30	**PHP 21L050TB**
		66,70	22	3F	1108	65,94	72	9	28	19,1	–	22	3,0	53	0,36	**PHP 22L050TB**
		69,73	23	3F	1108	68,97	78	9	28	19,1	–	22	3,0	54	0,39	**PHP 23L050TB**
		72,77	24	3F	1108	72,01	78	9	28	19,1	–	22	3,0	54	0,42	**PHP 24L050TB**
		75,80	25	3F	1108	75,04	85	9	28	19,1	–	22	3,0	56	0,49	**PHP 25L050TB**
		78,83	26	3F	1108	78,07	85	9	28	19,1	–	22	3,0	60	0,54	**PHP 26L050TB**
		81,86	27	3F	1108	81,10	91	9	28	19,1	–	22	3,0	62	0,61	**PHP 27L050TB**
		84,89	28	3F	1108	84,13	91	9	28	19,1	–	22	3,0	63	0,64	**PHP 28L050TB**
		90,06	30	3F	1108	89,30	97	9	28	19,1	–	22	3,0	70	0,77	**PHP 30L050TB**
		97,02	32	3F	1108	96,26	103	9	28	19,1	–	22	3,0	74	0,89	**PHP 32L050TB**
		109,15	36	3F	1108	108,39	115	9	28	19,1	–	22	3,0	85	1,18	**PHP 36L050TB**
		121,28	40	3F	1610	120,52	127	14	42	19,1	–	25	6,0	90	1,35	**PHP 40L050TB**
		133,40	44	3F	1610	132,64	139	14	42	19,1	–	25	6,0	90	1,60	**PHP 44L050TB**
		145,53	48	9F	1610	144,77	152	14	42	19,1	–	25	6,0	92	1,80	**PHP 48L050TB**
		181,91	60	9	1610	181,15	–	14	42	19,1	3,0	25	3,0	92	2,46	**PHP 60L050TB**
		218,30	72	9	1610	217,54	–	14	42	19,1	3,0	25	3,0	92	3,29	**PHP 72L050TB**
		254,68	84	9	1610	253,92	–	14	42	19,1	3,0	25	3,0	92	4,12	**PHP 84L050TB**
		291,06	96	9	2012	290,30	–	14	50	19,1	6,5	32	6,5	111	4,55	**PHP 96L050TB**
		363,83	120	9	2012	363,07	–	14	50	19,1	6,5	32	6,5	111	5,71	**PHP 120L050TB**
L	**19,1**	54,57	18	2F	1108	53,81	60	9	28	25,4	–	25	–	–	0,20	**PHP 18L075TB**
		57,61	19	2F	1108	56,85	63	9	28	25,4	–	25	–	–	0,30	**PHP 19L075TB**
		60,64	20	2F	1108	59,88	66	9	28	25,4	–	25	–	–	0,30	**PHP 20L075TB**
		63,67	21	2F	1108	62,91	69	9	28	25,4	–	25	–	–	0,40	**PHP 21L075TB**
		66,70	22	2F	1108	65,94	72	9	28	25,4	–	25	–	–	0,40	**PHP 22L075TB**
		69,73	23	2F	1108	68,97	78	9	28	25,4	–	25	–	–	0,50	**PHP 23L075TB**
		72,77	24	2F	1108	72,01	78	9	28	25,4	–	25	–	–	0,50	**PHP 24L075TB**
		75,80	25	2F	1108	75,04	85	9	28	25,4	–	25	–	–	0,60	**PHP 25L075TB**
		78,83	26	2F	1108	78,07	85	9	28	25,4	–	25	–	–	0,70	**PHP 26L075TB**
		81,86	27	2F	1108	81,10	91	9	28	25,4	–	25	–	–	0,70	**PHP 27L075TB**
		84,89	28	2F	1108	84,13	91	9	28	25,4	–	25	–	–	0,80	**PHP 28L075TB**
		90,96	30	2F	1108	90,20	97	9	28	25,4	–	25	–	–	1,00	**PHP 30L075TB**
		97,02	32	2F	1108	96,26	103	9	28	25,4	–	25	–	–	1,10	**PHP 32L075TB**
		109,15	36	2F	1610	108,39	115	14	42	25,4	–	25	–	–	1,20	**PHP 36L075TB**
		121,28	40	2F	1610	120,52	127	14	42	25,4	–	25	–	–	1,60	**PHP 40L075TB**
		133,40	44	2F	1610	132,64	139	14	42	25,4	–	25	–	–	1,90	**PHP 44L075TB**
		145,53	48	7F	1610	144,77	152	14	42	25,4	–	25	–	92	2,20	**PHP 48L075TB**
		181,91	60	7	1610	181,15	–	14	42	25,4	–	25	–	92	3,00	**PHP 60L075TB**
		218,30	72	8	1610	217,54	–	14	42	25,4	–	25	–	92	4,00	**PHP 72L075TB**
		254,68	84	9	2012	253,92	–	14	50	25,4	3,5	32	3,5	106	5,20	**PHP 84L075TB**
		291,06	96	9	2012	290,30	–	14	50	25,4	3,5	32	3,5	106	6,50	**PHP 96L075TB**
		363,83	120	9	2012	363,07	–	14	50	25,4	3,5	32	3,5	106	7,60	**PHP 120L075TB**
L	**25,4**	54,57	18	4F	1108	53,81	60	9	28	31,8	10,0	22	–	–	0,27	**PHP 18L100TB**
		57,61	19	4F	1108	56,85	63	9	28	31,8	10,0	22	–	–	0,30	**PHP 19L100TB**
		60,64	20	4F	1108	59,88	66	9	28	31,8	10,0	22	–	–	0,36	**PHP 20L100TB**
		63,67	21	4F	1108	62,91	69	9	28	31,8	10,0	22	–	–	0,44	**PHP 21L100TB**
		66,70	22	4F	1108	65,94	72	9	28	31,8	10,0	22	–	–	0,51	**PHP 22L100TB**
		69,73	23	4F	1108	68,97	78	9	28	31,8	10,0	22	–	–	0,54	**PHP 23L100TB**
		72,77	24	4F	1108	72,01	78	9	28	31,8	10,0	22	–	–	0,58	**PHP 24L100TB**
		75,80	25	4F	1108	75,04	85	9	28	31,8	10,0	22	–	–	0,67	**PHP 25L100TB**
		78,83	26	4F	1108	78,07	85	9	28	31,8	10,0	22	–	–	0,72	**PHP 26L100TB**

* Mass does not include bushings.

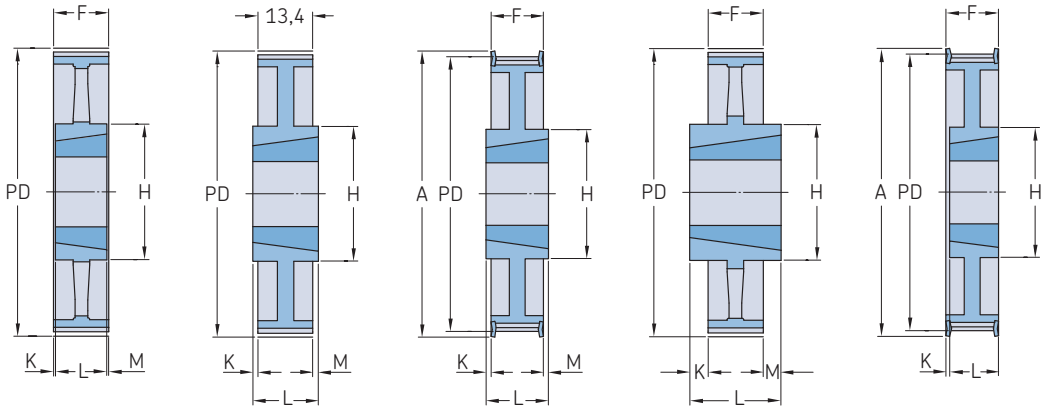

Section	Belt width	Pitch diameter PD	Number of teeth	Pulley type	Bushing number	Dimensions Outer diameter OD	A	B Min.	B Max.	F	K	L	M	H	Mass*	Designation
–	mm		–	–	–	mm									kg	–
L	**25,4**	81,86	27	4F	1108	81,10	91	9	28	31,8	10,0	22	–	–	0,80	**PHP 27L100TB**
		84,89	28	4F	1108	84,13	91	9	28	31,8	10,0	22	–	–	0,83	**PHP 28L100TB**
		90,96	30	4F	1210	90,20	97	11	32	31,8	7,0	25	–	–	0,94	**PHP 30L100TB**
		97,02	32	4F	1210	96,26	103	11	32	31,8	7,0	25	–	–	1,10	**PHP 32L100TB**
		109,15	36	4F	1610	108,39	115	14	42	31,8	7,0	25	–	–	1,33	**PHP 36L100TB**
		121,28	40	4F	1610	120,52	127	14	42	31,8	7,0	25	–	–	1,70	**PHP 40L100TB**
		133,40	44	4F	1610	132,64	139	14	42	31,8	7,0	25	–	–	2,30	**PHP 44L100TB**
		145,53	48	13F	1610	144,77	152	14	42	31,8	7,0	25	–	92	2,60	**PHP 48L100TB**
		181,91	60	7	1610	181,15	–	14	42	31,8	3,5	25	3,5	92	3,76	**PHP 60L100TB**
		218,30	72	10	2012	217,54	–	14	50	31,8	–	32	–	111	4,40	**PHP 72L100TB**
		254,68	84	10	2012	253,92	–	14	50	31,8	–	32	–	111	5,87	**PHP 84L100TB**
		291,06	96	10	2012	290,30	–	14	50	31,8	–	32	–	111	7,26	**PHP 96L100TB**
		363,83	120	10	2012	363,07	–	14	50	31,8	–	32	–	111	8,50	**PHP 120L100TB**
H	**19,1**	56,60	14	2F	1108	55,23	62	9	28	27,0	–	22	–	–	0,48	**PHP 14H075TB**
		60,64	15	2F	1108	59,27	67	9	28	27,0	–	22	–	–	0,53	**PHP 15H075TB**
		64,67	16	2F	1108	63,30	71	9	28	27,0	–	22	–	–	0,57	**PHP 16H075TB**
		68,72	17	2F	1108	67,35	75	9	28	27,0	–	22	–	–	0,67	**PHP 17H075TB**
		72,77	18	2F	1210	71,40	79	11	32	27,0	–	25	–	–	0,76	**PHP 18H075TB**
		76,81	19	2F	1210	75,44	83	11	32	27,0	–	25	–	–	0,95	**PHP 19H075TB**
		80,85	20	2F	1210	79,48	87	11	32	27,0	–	25	–	–	1,05	**PHP 20H075TB**
		84,89	21	2F	1210	83,52	91	11	32	27,0	–	25	–	–	1,14	**PHP 21H075TB**
		88,94	22	2F	1210	87,57	95	11	32	27,0	–	25	–	–	1,33	**PHP 22H075TB**
		92,98	23	2F	1610	91,61	98	14	42	27,0	–	25	–	–	1,43	**PHP 23H075TB**
		97,02	24	2F	1610	95,65	103	14	42	27,0	–	25	–	–	1,52	**PHP 24H075TB**
		101,06	25	2F	1610	99,69	107	14	42	27,0	–	25	–	–	1,62	**PHP 25H075TB**
		105,11	26	2F	1610	103,74	111	14	42	27,0	–	25	–	–	1,71	**PHP 26H075TB**
		109,15	27	2F	1610	107,78	115	14	42	27,0	–	25	–	–	1,81	**PHP 27H075TB**
		113,19	28	2F	1610	111,82	119	14	42	27,0	–	25	–	–	1,90	**PHP 28H075TB**
		117,23	29	2F	1610	115,86	123	14	42	27,0	–	25	–	–	1,95	**PHP 29H075TB**
		121,28	30	2F	1610	119,91	127	14	42	27,0	–	25	–	–	2,00	**PHP 30H075TB**

* Mass does not include bushings.

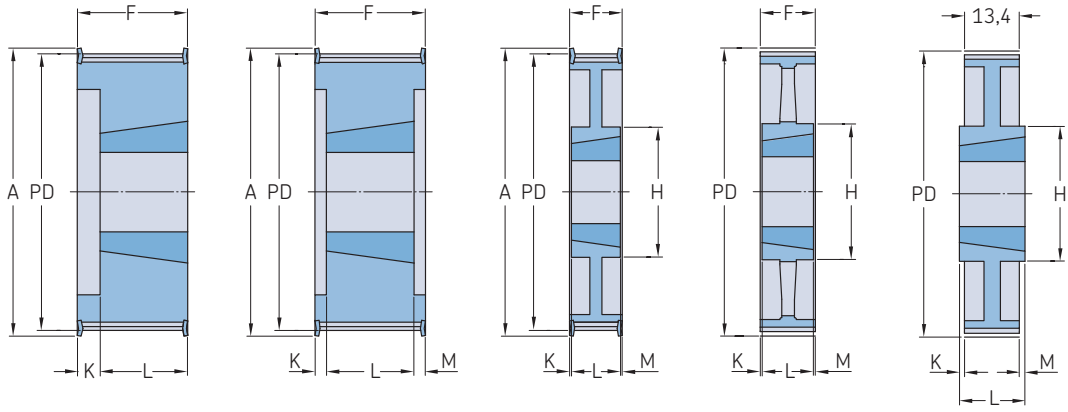

Type 4F Type 6F Type 7F Type 8 Type 9

Section	Belt width	Pitch diameter PD	Number of teeth	Pulley type	Bushing number	Dimensions Outer diameter OD	A	B Min.	B Max.	F	K	L	M	H	Mass*	Designation
–	mm		–	–	–	mm									kg	–
H	**19,1**	129,36	32	14F	1610	127,99	135	14	42	27,0	–	25	–	92	2,09	**PHP 32H075TB**
		133,40	33	14F	1610	132,03	142	14	42	27,0	–	25	–	92	2,14	**PHP 33H075TB**
		137,45	34	14F	1610	136,08	142	14	42	27,0	–	25	–	92	2,19	**PHP 34H075TB**
		141,49	35	14F	1610	140,12	151	14	42	27,0	–	25	–	92	2,24	**PHP 35H075TB**
		145,53	36	14F	1610	144,16	151	14	42	27,0	–	25	–	92	2,28	**PHP 36H075TB**
		153,62	38	14F	1610	152,25	158	14	42	27,0	–	25	–	92	2,47	**PHP 38H075TB**
		161,70	40	14F	1610	160,33	168	14	42	27,0	–	25	–	92	2,66	**PHP 40H075TB**
		177,87	44	9F	2012	176,50	184	14	50	27,0	2,5	32	2,5	106	2,57	**PHP 44H075TB**
		194,04	48	9F	2012	192,67	200	14	50	27,0	2,5	32	2,5	106	2,85	**PHP 48H075TB**
		242,55	60	9	2012	241,18	–	14	50	27,0	2,5	32	2,5	106	2,90	**PHP 60H075TB**
		291,06	72	9	2012	289,69	–	14	50	27,0	2,5	32	2,5	112	3,00	**PHP 72H075TB**
		339,57	84	9	2012	338,20	–	14	50	27,0	2,5	32	2,5	112	3,15	**PHP 84H075TB**
		388,08	96	9	2517	386,71	–	16	60	27,0	9,0	45	9,0	125	3,50	**PHP 96H075TB**
		485,10	120	9	2517	483,73	–	16	60	27,0	9,0	45	9,0	125	4,25	**PHP 120H075TB**
H	**25,4**	56,60	14	4F	1108	55,23	63	9	28	31,0	9,0	22	–	–	0,30	**PHP 14H100TB**
		60,60	15	4F	1108	59,23	67	9	28	31,0	9,0	22	–	–	0,40	**PHP 15H100TB**
		64,70	16	4F	1108	63,33	71	9	28	31,0	9,0	22	–	–	0,40	**PHP 16H100TB**
		68,70	17	4F	1108	67,33	75	9	28	31,0	9,0	22	–	–	0,50	**PHP 17H100TB**
		72,80	18	4F	1210	71,43	79	11	32	31,0	6,0	25	–	–	0,50	**PHP 18H100TB**
		76,80	19	4F	1210	75,43	83	11	32	31,0	6,0	25	–	–	0,60	**PHP 19H100TB**
		80,80	20	4F	1210	79,43	87	11	32	31,0	6,0	25	–	–	0,80	**PHP 20H100TB**
		84,90	21	4F	1210	83,53	91	11	32	32,0	7,0	25	–	–	0,80	**PHP 21H100TB**
		88,90	22	4F	1210	87,53	95	11	32	32,0	7,0	25	–	–	0,90	**PHP 22H100TB**
		93,00	23	4F	1610	91,63	98	14	42	32,0	7,0	25	–	–	0,90	**PHP 23H100TB**
		97,00	24	4F	1610	95,63	103	14	42	32,0	7,0	25	–	–	1,00	**PHP 24H100TB**
		101,10	25	4F	1610	99,73	107	14	42	32,0	7,0	25	–	–	1,10	**PHP 25H100TB**
		105,10	26	4F	1610	103,73	111	14	42	32,0	7,0	25	–	–	1,20	**PHP 26H100TB**
		109,20	27	4F	1610	107,83	115	14	42	32,0	7,0	25	–	–	1,40	**PHP 27H100TB**
		113,20	28	4F	1610	111,83	119	14	42	32,0	7,0	25	–	–	1,50	**PHP 28H100TB**
		121,30	30	4F	1610	119,93	127	14	42	32,0	7,0	25	–	–	1,70	**PHP 30H100TB**
		129,40	32	13F	1610	128,03	135	14	42	32,0	7,0	25	–	92	1,70	**PHP 32H100TB**
		145,50	36	13F	1610	144,13	151	14	42	32,0	7,0	25	–	92	2,30	**PHP 36H100TB**
		161,70	40	13F	1610	160,33	168	14	42	32,0	7,0	25	–	92	2,70	**PHP 40H100TB**
		177,90	44	14F	2012	176,53	184	14	50	32,0	7,0	32	–	106	3,70	**PHP 44H100TB**
		194,00	48	14F	2012	192,63	200	14	50	32,0	7,0	32	–	106	4,70	**PHP 48H100TB**
		242,60	60	8	2012	241,23	–	14	50	34,0	1,0	32	1,0	106	7,50	**PHP 60H100TB**
		291,10	72	8	2012	289,73	–	14	50	34,0	1,0	32	1,0	106	8,40	**PHP 72H100TB**
		339,60	84	8	2012	338,23	–	14	50	34,0	1,0	32	1,0	106	9,00	**PHP 84H100TB**
		388,10	96	9	2517	386,73	–	16	60	34,0	5,5	45	5,5	124	11,00	**PHP 96H100TB**
		485,10	120	9	2517	483,73	–	16	60	34,0	5,5	45	5,5	124	14,00	**PHP 120H100TB**
H	**38,1**	56,60	14	4F	1108	55,23	63	9	28	45,0	23,0	22	–	–	0,50	**PHP 14H150TB**
		64,67	16	4F	1108	63,30	71	9	28	45,0	23,0	22	–	–	0,60	**PHP 16H150TB**
		72,77	18	4F	1210	71,40	79	11	32	45,0	20,0	25	–	–	0,69	**PHP 18H150TB**
		76,81	19	4F	1210	75,44	83	11	32	45,0	20,0	25	–	–	0,86	**PHP 19H150TB**
		80,85	20	4F	1210	79,48	87	11	32	45,0	20,0	25	–	–	0,98	**PHP 20H150TB**
		84,89	21	4F	1210	83,52	91	11	32	45,0	20,0	25	–	–	0,98	**PHP 21H150TB**
		88,94	22	4F	1210	87,57	95	11	32	45,0	20,0	25	–	–	1,10	**PHP 22H150TB**
		92,98	23	4F	1610	91,61	98	14	42	45,0	20,0	25	–	–	1,16	**PHP 23H150TB**
		97,02	24	4F	1610	95,65	103	14	42	45,0	20,0	25	–	–	1,22	**PHP 24H150TB**
		101,06	25	4F	1610	99,69	107	14	42	45,0	20,0	25	–	–	1,37	**PHP 25H150TB**
		105,11	26	4F	1610	103,74	111	14	42	45,0	20,0	25	–	–	1,51	**PHP 26H150TB**
		109,15	27	4F	1610	107,78	115	14	42	45,0	20,0	25	–	–	1,67	**PHP 27H150TB**
		113,19	28	4F	1610	111,82	119	14	42	45,0	20,0	25	–	–	1,77	**PHP 28H150TB**

* Mass does not include bushings.

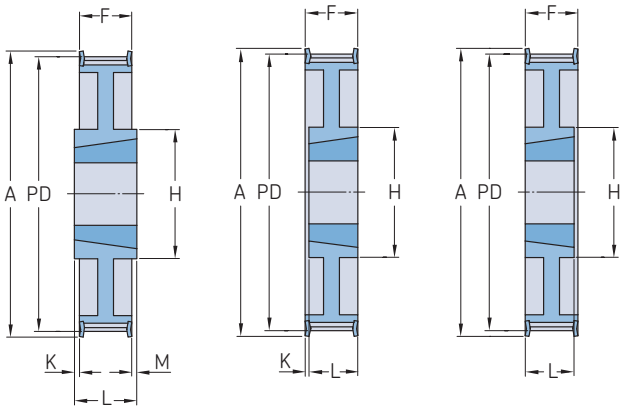

Section	Belt width	Pitch diameter PD	Number of teeth	Pulley type	Bushing number	Dimensions Outer diameter OD	A	B Min.	Max.	F	K	L	M	H	Mass*	Designation
–	mm		–	–	–	mm									kg	–
H	**38,1**	121,28	30	4F	1610	119,91	127	14	42	45,0	20,0	25	–	–	2,05	**PHP 30H150TB**
		129,36	32	13F	1610	127,99	135	14	42	45,0	20,0	25	–	92	2,07	**PHP 32H150TB**
		145,53	36	13F	1610	144,16	151	14	42	45,0	20,0	25	–	92	2,76	**PHP 36H150TB**
		161,70	40	13F	1610	160,33	168	14	42	45,0	20,0	25	–	92	3,34	**PHP 40H150TB**
		177,87	44	13F	2012	176,50	184	14	50	45,0	13,0	32	–	106	5,19	**PHP 44H150TB**
		194,34	48	13F	2012	192,97	200	14	50	45,0	13,0	32	–	106	5,70	**PHP 48H150TB**
		242,55	60	8	2012	241,18	–	14	50	46,0	7,0	32	7,0	106	6,81	**PHP 60H150TB**
		291,06	72	8	2012	289,69	–	14	50	46,0	7,0	32	7,0	106	7,79	**PHP 72H150TB**
		339,57	84	8	2012	338,20	–	14	50	46,0	7,0	32	7,0	111	9,15	**PHP 84H150TB**
		388,08	96	8	2517	386,71	–	16	60	46,0	0,5	45	0,5	124	13,00	**PHP 96H150TB**
		485,10	120	8	2517	483,73	–	16	60	46,0	0,5	45	0,5	124	16,80	**PHP 120H150TB**
H	**50,8**	64,57	16	4F	1108	63,20	71	9	28	58,0	36,0	22	–	–	0,80	**PHP 16H200TB**
		72,77	18	4F	1210	71,40	79	11	32	58,0	33,0	25	–	–	0,91	**PHP 18H200TB**
		76,81	19	4F	1210	75,44	83	11	32	58,0	33,0	25	–	–	1,05	**PHP 19H200TB**
		80,85	20	4F	1610	79,48	87	14	42	58,0	33,0	25	–	–	0,92	**PHP 20H200TB**
		84,89	21	4F	1610	83,52	91	14	42	58,0	33,0	25	–	–	1,04	**PHP 21H200TB**
		88,94	22	4F	1610	87,57	95	14	42	58,0	33,0	25	–	–	1,18	**PHP 22H200TB**
		92,98	23	4F	1610	91,61	98	14	42	58,0	33,0	25	–	–	1,28	**PHP 23H200TB**
		97,02	24	4F	1610	95,65	103	14	42	58,0	33,0	25	–	–	1,37	**PHP 24H200TB**
		101,06	25	4F	1610	99,69	107	14	42	58,0	33,0	25	–	–	1,59	**PHP 25H200TB**
		105,11	26	4F	1610	103,74	111	14	42	58,0	33,0	25	–	–	1,63	**PHP 26H200TB**
		109,15	27	4F	1610	107,78	115	14	42	58,0	33,0	25	–	–	1,98	**PHP 27H200TB**
		113,19	28	4F	1610	111,82	119	14	42	58,0	33,0	25	–	–	1,92	**PHP 28H200TB**
		121,28	30	4F	1610	119,91	127	14	42	58,0	33,0	25	–	–	2,24	**PHP 30H200TB**
		129,36	32	4F	2012	127,99	135	14	50	58,0	26,0	32	–	–	2,87	**PHP 32H200TB**
		145,53	36	13F	2012	144,16	151	14	50	58,0	26,0	32	–	–	3,42	**PHP 36H200TB**
		161,70	40	13F	2012	160,33	168	14	50	58,0	26,0	32	–	–	4,39	**PHP 40H200TB**
		177,87	44	13F	2012	176,50	184	14	50	58,0	26,0	32	–	–	5,89	**PHP 44H200TB**
		194,04	48	13F	2517	192,67	200	16	60	58,0	13,0	45	–	–	7,00	**PHP 48H200TB**
		242,55	60	8	2517	241,18	–	16	60	60,0	7,5	45	7,5	–	8,88	**PHP 60H200TB**
		291,06	72	8	2517	289,69	–	16	60	60,0	7,5	45	7,5	–	9,05	**PHP 72H200TB**
		339,57	84	8	2517	338,20	–	16	60	60,0	7,5	45	7,5	–	10,66	**PHP 84H200TB**
		388,08	96	8	2517	386,71	–	16	60	60,0	7,5	45	7,5	–	15,28	**PHP 96H200TB**
		485,10	120	8	2517	483,73	–	16	60	60,0	7,5	45	7,5	–	20,16	**PHP 120H200TB**
H	**76,2**	72,77	18	6F	1215	71,40	83	11	32	84,0	23,0	38	23,0	–	1,10	**PHP 18H300TB**
		80,85	20	6F	1615	79,48	87	14	42	84,0	23,0	38	23,0	–	1,25	**PHP 20H300TB**
		84,89	21	6F	1615	83,52	91	14	42	84,0	23,0	38	23,0	–	1,56	**PHP 21H300TB**
		88,94	22	6F	1615	87,57	94	14	42	84,0	23,0	38	23,0	–	1,75	**PHP 22H300TB**
		92,98	23	6F	1615	91,61	98	14	42	84,0	23,0	38	23,0	–	1,93	**PHP 23H300TB**
		97,02	24	6F	1615	95,65	103	14	42	84,0	23,0	38	23,0	–	2,14	**PHP 24H300TB**
		101,06	25	6F	1615	99,69	107	14	42	84,0	23,0	38	23,0	–	2,21	**PHP 25H300TB**
		105,11	26	6F	1615	103,74	111	14	42	84,0	23,0	38	23,0	–	2,65	**PHP 26H300TB**
		109,15	27	6F	2012	107,78	115	14	50	84,0	26,0	32	26,0	–	2,49	**PHP 27H300TB**
		113,19	28	6F	2012	111,82	119	14	50	84,0	26,0	32	26,0	–	2,88	**PHP 28H300TB**
		121,28	30	6F	2012	119,91	127	14	50	84,0	26,0	32	26,0	–	3,44	**PHP 30H300TB**
		129,36	32	6F	2517	127,99	135	16	60	84,0	19,5	45	19,5	–	3,51	**PHP 32H300TB**
		145,53	36	6F	2517	144,16	151	16	60	84,0	19,5	45	19,5	–	4,43	**PHP 36H300TB**
		161,70	40	6F	2517	160,33	168	16	60	84,0	19,5	45	19,5	–	6,10	**PHP 40H300TB**
		177,87	44	7F	2517	176,50	184	16	60	86,0	20,5	45	20,5	124	7,55	**PHP 44H300TB**
		194,04	48	7F	2517	192,67	200	16	60	86,0	20,5	45	20,5	124	8,99	**PHP 48H300TB**
		242,55	60	8	2517	241,18	–	16	60	86,0	20,5	45	20,5	124	11,06	**PHP 60H300TB**
		291,06	72	8	2517	289,69	–	16	60	86,0	20,5	45	20,5	124	12,66	**PHP 72H300TB**
		339,57	84	8	2517	338,20	–	16	60	86,0	20,5	45	20,5	124	14,50	**PHP 84H300TB**

* Mass does not include bushings.

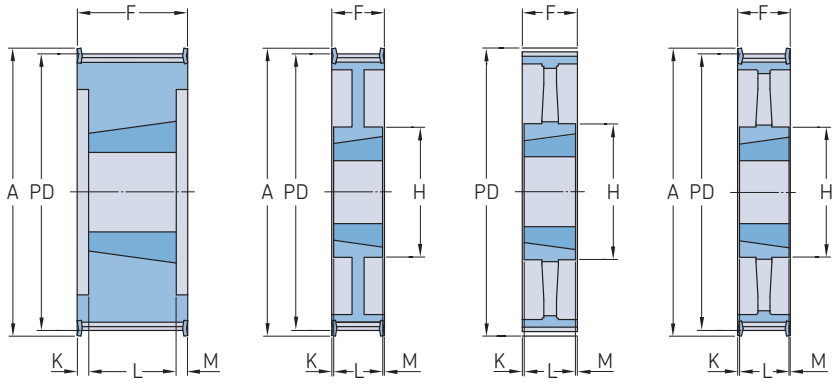

Type 6F Type 7F Type 8 Type 8F

Section	Belt width	Pitch diameter PD	Number of teeth	Pulley type	Bushing number	Dimensions Outer diameter OD	A	B Min.	Max.	F	K	L	M	H	Mass*	Designation
–	mm		–	–	–	mm									kg	–
H	**76,2**	388,08	96	8	3030	386,71	–	35	75	86,0	5,0	76	5,0	155	16,20	**PHP 96H300TB**
		485,10	120	8	3030	483,73	–	35	75	86,0	5,0	76	5,0	155	20,80	**PHP 120H300TB**
XH	**50,8**	127,34	18	6F	2012	124,54	141	14	50	65,1	–	32	–	–	2,60	**PHP 18XH200TB**
		134,41	19	6F	2012	131,61	146	14	50	65,1	–	32	–	–	3,10	**PHP 19XH200TB**
		141,49	20	6F	2012	138,69	155	14	50	65,1	–	32	–	–	3,60	**PHP 20XH200TB**
		148,56	21	6F	2517	145,76	169	16	60	65,1	–	45	–	–	4,20	**PHP 21XH200TB**
		155,64	22	6F	2517	152,84	169	16	60	65,1	–	45	–	–	4,80	**PHP 22XH200TB**
		169,79	24	6F	2517	166,99	183	16	60	65,1	–	45	–	–	6,10	**PHP 24XH200TB**
		176,86	25	6F	2517	174,06	198	16	60	65,1	–	45	–	–	6,80	**PHP 25XH200TB**
		183,93	26	6F	2517	181,13	198	16	60	65,1	–	45	–	–	7,40	**PHP 26XH200TB**
		191,01	27	7F	2517	188,21	212	16	60	65,1	–	45	–	134	8,20	**PHP 27XH200TB**
		198,09	28	7F	2517	195,29	212	16	60	65,1	–	45	–	134	9,00	**PHP 28XH200TB**
		212,23	30	7F	2517	209,43	226	16	60	65,1	–	45	–	134	9,60	**PHP 30XH200TB**
		226,38	32	7F	2517	223,58	240	16	60	65,1	–	45	–	134	9,80	**PHP 32XH200TB**
		254,64	36	8F	2517	251,84	267	16	60	65,1	–	45	–	134	11,60	**PHP 36XH200TB**
		282,98	40	8	2517	280,18	–	16	60	65,1	–	45	–	134	13,30	**PHP 40XH200TB**
		339,57	48	8	3020	336,77	–	25	75	65,1	–	51	–	165	19,00	**PHP 48XH200TB**
		424,47	60	8	3020	421,67	–	25	75	65,1	–	51	–	165	22,00	**PHP 60XH200TB**
XH	**76,2**	127,34	18	6F	2012	124,54	141	14	50	92,1	–	45	–	–	3,70	**PHP 18XH300TB**
		134,41	19	6F	2517	131,61	146	16	60	92,1	–	45	–	–	4,20	**PHP 19XH300TB**
		141,49	20	6F	2517	138,69	155	16	60	92,1	–	45	–	–	4,70	**PHP 20XH300TB**
		148,56	21	6F	2517	145,76	169	16	60	92,1	–	45	–	–	5,40	**PHP 21XH300TB**
		155,64	22	6F	2517	152,84	169	16	60	92,1	–	45	–	–	6,00	**PHP 22XH300TB**
		169,79	24	6F	2517	166,99	183	16	60	92,1	–	45	–	–	7,60	**PHP 24XH300TB**
		176,86	25	6F	2517	174,06	198	16	60	92,1	–	45	–	–	8,70	**PHP 25XH300TB**
		183,93	26	6F	2517	181,13	198	16	60	92,1	–	45	–	–	9,80	**PHP 26XH300TB**
		191,01	27	6F	2517	188,21	212	16	60	92,1	–	45	–	–	10,70	**PHP 27XH300TB**
		198,09	28	7F	2517	195,29	212	16	60	92,1	–	45	–	134	11,60	**PHP 28XH300TB**
		212,23	30	7F	2517	209,43	226	16	60	92,1	–	45	–	134	11,90	**PHP 30XH300TB**
		226,38	32	7F	3020	223,58	240	25	75	92,1	–	51	–	165	13,80	**PHP 32XH300TB**
		254,64	36	7F	3020	251,84	267	25	75	92,1	–	51	–	165	16,70	**PHP 36XH300TB**
		282,98	40	8	3020	280,18	–	25	75	92,1	–	51	–	165	19,50	**PHP 40XH300TB**
		339,57	48	8	3020	336,77	–	25	75	92,1	–	51	–	165	27,00	**PHP 48XH300TB**
		424,47	60	8	3535	421,67	–	35	90	92,1	–	89	–	184	28,00	**PHP 60XH300TB**
XH	**101,6**	127,34	18	6F	2012	124,54	141	16	60	92,1	–	45	–	–	5,00	**PHP 18XH400TB**
		134,41	19	6F	2517	131,61	146	16	60	92,1	–	45	–	–	5,50	**PHP 19XH400TB**
		141,49	20	6F	2517	138,69	155	16	60	92,1	–	45	–	–	6,00	**PHP 20XH400TB**
		148,56	21	6F	2517	145,76	169	16	60	92,1	–	45	–	–	6,60	**PHP 21XH400TB**
		155,64	22	6F	2517	152,84	169	16	60	92,1	–	45	–	–	7,20	**PHP 22XH400TB**
		169,79	24	6F	3020	166,99	183	25	75	92,1	–	51	–	–	8,40	**PHP 24XH400TB**
		176,86	25	6F	3020	174,06	198	25	75	92,1	–	51	–	–	9,40	**PHP 25XH400TB**
		183,93	26	6F	3020	181,13	198	25	75	92,1	–	51	–	–	10,30	**PHP 26XH400TB**
		191,01	27	6F	3020	188,21	212	25	75	92,1	–	51	–	–	11,30	**PHP 27XH400TB**
		198,09	28	6F	3020	195,29	212	25	75	92,1	–	51	–	–	12,30	**PHP 28XH400TB**
		212,23	30	6F	3020	209,43	226	25	75	92,1	–	51	–	–	14,30	**PHP 30XH400TB**
		226,38	32	7F	3020	223,58	240	25	75	92,1	–	51	–	165	19,90	**PHP 32XH400TB**
		254,64	36	7F	3020	251,84	267	25	75	92,1	–	51	–	165	22,30	**PHP 36XH400TB**
		282,98	40	8	3020	280,18	–	25	75	92,1	–	51	–	165	24,60	**PHP 40XH400TB**
		339,57	48	8	3535	336,77	–	35	90	92,1	–	89	–	184	30,00	**PHP 48XH400TB**
		424,47	60	8	3535	421,67	–	35	90	92,1	–	89	–	184	40,00	**PHP 60XH400TB**

* Mass does not include bushings.

Metric timing pulleys

2,5 mm pitch type T pilot bore (RSB)

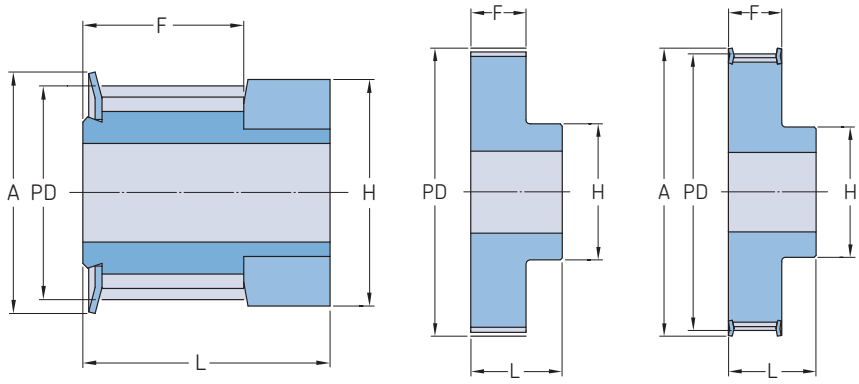

Type 0F Type 1 Type 1F

Pitch	Belt width	Pitch diameter PD	Number of teeth	Pulley type	Dimensions Outer diameter OD	A	B Min.	B Max.	H	F	L	Mass	Designation
–	mm		–	–	mm							kg	–
2,5	**4 and 6**	7,96	10	0F	7,45	10	–	3	10	10	16	0,001	**PHP 16-T2.5-10RSB**
		8,75	11	0F	8,25	12	–	3	11	10	16	0,002	**PHP 16-T2.5-11RSB**
		9,54	12	0F	9,00	13	–	4	13	10	16	0,003	**PHP 16-T2.5-12RSB**
		10,35	13	0F	9,95	14	–	4	14	10	16	0,004	**PHP 16-T2.5-13RSB**
		11,14	14	0F	10,60	15	–	5	15	10	16	0,004	**PHP 16-T2.5-14RSB**
		11,94	15	0F	11,40	15	–	6	15	10	16	0,010	**PHP 16-T2.5-15RSB**
		12,73	16	0F	12,20	16	–	7	16	10	16	0,005	**PHP 16-T2.5-16RSB**
		13,53	17	0F	13,00	17	4	7	16	10	16	0,006	**PHP 16-T2.5-17RSB**
		14,32	18	1F	13,80	18	4	7	10	10	16	0,006	**PHP 16-T2.5-18RSB**
		15,12	19	1F	14,60	18	4	7	10	10	16	0,007	**PHP 16-T2.5-19RSB**
		15,92	20	1F	15,40	20	4	7	11	10	16	0,008	**PHP 16-T2.5-20RSB**
		16,71	21	1F	16,20	20	4	7	11	10	16	0,009	**PHP 16-T2.5-21RSB**
		17,51	22	1F	17,00	23	4	7	10	10	16	0,009	**PHP 16-T2.5-22RSB**
		18,30	23	1F	17,80	23	4	8	12	10	16	0,010	**PHP 16-T2.5-23RSB**
		19,10	24	1F	18,55	23	4	8	12	10	16	0,012	**PHP 16-T2.5-24RSB**
		19,89	25	1F	19,35	23	4	9	13	10	16	0,013	**PHP 16-T2.5-25RSB**
		20,69	26	1F	20,15	25	4	9	14	10	16	0,014	**PHP 16-T2.5-26RSB**
		21,49	27	1F	20,90	25	4	9	14	10	16	0,015	**PHP 16-T2.5-27RSB**
		22,28	28	1F	21,75	25	4	9	14	10	16	0,016	**PHP 16-T2.5-28RSB**
		23,87	30	1F	23,35	28	6	10	16	10	16	0,018	**PHP 16-T2.5-30RSB**
		25,46	32	1F	24,95	32	6	10	16	10	16	0,020	**PHP 16-T2.5-32RSB**
		27,85	35	1F	27,35	36	6	10	18	10	16	0,024	**PHP 16-T2.5-35RSB**
		28,65	36	1F	28,10	36	6	13	20	10	16	0,026	**PHP 16-T2.5-36RSB**
		30,24	38	1F	39,70	38	6	13	22	10	16	0,029	**PHP 16-T2.5-38RSB**
		31,83	40	1F	31,30	38	6	13	22	10	16	0,032	**PHP 16-T2.5-40RSB**
		33,42	42	1F	32,90	42	6	15	24	10	16	0,036	**PHP 16-T2.5-42RSB**
		35,01	44	1	34,50	–	6	15	24	10	16	0,040	**PHP 16-T2.5-44RSB**
		35,81	45	1	35,30	–	6	17	26	10	16	0,044	**PHP 16-T2.5-45RSB**
		38,20	48	1	37,70	–	6	17	26	10	16	0,048	**PHP 16-T2.5-48RSB**
		42,97	54	1	42,45	–	8	19	30	10	16	0,056	**PHP 16-T2.5-54RSB**
		45,36	57	1	44,85	–	8	19	32	10	16	0,064	**PHP 16-T2.5-57RSB**
		47,75	60	1	47,25	–	8	22	34	10	16	0,073	**PHP 16-T2.5-60RSB**
2,5	**10**	7,96	10	0F	7,45	10	3	3	10	14	20	0,010	**PHP 20-T2.5-10RSB**
		8,75	11	0F	8,25	12	3	3	11	14	20	0,010	**PHP 20-T2.5-11RSB**
		9,55	12	0F	9,00	13	3	4	13	14	20	0,020	**PHP 20-T2.5-12RSB**
		10,35	13	0F	9,95	14	3	4	14	14	20	0,020	**PHP 20-T2.5-13RSB**
		11,14	14	0F	10,60	14	3	5	15	14	20	0,020	**PHP 20-T2.5-14RSB**
		11,94	15	0F	11,40	15	3	6	15	14	20	0,020	**PHP 20-T2.5-15RSB**
		12,73	16	0F	12,20	16	4	7	16	14	20	0,030	**PHP 20-T2.5-16RSB**
		13,53	17	1F	13,00	17	4	7	16	14	20	0,020	**PHP 20-T2.5-17RSB**
		14,32	18	1F	13,80	17	4	7	10	14	20	0,030	**PHP 20-T2.5-18RSB**
		15,12	19	1F	14,60	18	4	7	10	14	20	0,040	**PHP 20-T2.5-19RSB**
		15,92	20	1F	15,40	19	4	7	11	14	20	0,040	**PHP 20-T2.5-20RSB**
		16,71	21	1F	16,20	20	4	7	11	14	20	0,040	**PHP 20-T2.5-21RSB**
		17,60	22	1F	17,00	22	4	7	11	14	20	0,050	**PHP 20-T2.5-22RSB**
		18,30	23	1F	17,80	22	4	8	12	14	20	0,050	**PHP 20-T2.5-23RSB**
		19,10	24	1F	18,55	22	4	8	12	14	20	0,050	**PHP 20-T2.5-24RSB**
		19,89	25	1F	19,35	24	4	9	13	14	20	0,060	**PHP 20-T2.5-25RSB**
		20,75	26	1F	20,15	26	4	9	14	14	20	0,060	**PHP 20-T2.5-26RSB**
		21,49	27	1F	20,90	26	4	9	14	14	20	0,060	**PHP 20-T2.5-27RSB**
		22,35	28	1F	21,75	26	4	9	14	14	20	0,070	**PHP 20-T2.5-28RSB**
		23,87	30	1F	23,35	28	6	10	16	14	20	0,080	**PHP 20-T2.5-30RSB**
		25,47	32	1F	24,95	28	6	10	16	14	20	0,090	**PHP 20-T2.5-32RSB**

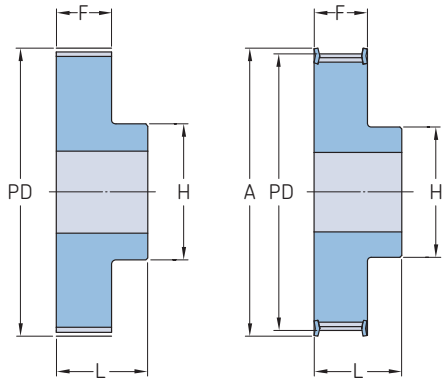

Type 1 Type 1F

Pitch	Belt width	Pitch diameter PD	Number of teeth	Pulley type	Dimensions Outer diameter OD	A	B Min.	B Max.	H	F	L	Mass	Designation
–	mm		–	–	mm							kg	–
2,5	**10**	27,85	35	1F	27,35	32	6	10	18	14	20	0,110	**PHP 20-T2.5-35RSB**
		28,65	36	1F	28,10	32	6	13	20	14	20	0,110	**PHP 20-T2.5-36RSB**
		30,24	38	1F	39,70	34	6	13	22	14	20	0,130	**PHP 20-T2.5-38RSB**
		31,83	40	1F	31,30	35	6	13	22	14	20	0,140	**PHP 20-T2.5-40RSB**
		33,42	42	1	32,90	–	6	15	24	14	20	0,180	**PHP 20-T2.5-42RSB**
		35,01	44	1	34,50	–	6	15	24	14	20	0,190	**PHP 20-T2.5-44RSB**
		35,81	45	1	35,30	–	6	17	26	14	20	0,190	**PHP 20-T2.5-45RSB**
		38,20	48	1	37,70	–	6	17	26	14	20	0,200	**PHP 20-T2.5-48RSB**
		42,97	54	1	42,45	–	8	19	30	14	20	0,250	**PHP 20-T2.5-54RSB**
		45,36	57	1	44,85	–	8	19	32	14	20	0,280	**PHP 20-T2.5-57RSB**
		47,75	60	1	47,25	–	8	22	34	14	20	0,310	**PHP 20-T2.5-60RSB**
5	**10**	15,92	10	1F	15,05	20	4	5	8	15	21	0,010	**PHP 21-T5-10RSB**
		17,51	11	1F	16,65	22	4	6	10	15	21	0,010	**PHP 21-T5-11RSB**
		19,10	12	1F	18,25	23	4	7	12	15	21	0,020	**PHP 21-T5-12RSB**
		20,69	13	1F	19,85	25	6	8	13	15	21	0,020	**PHP 21-T5-13RSB**
		22,29	14	1F	21,45	26	6	9	14	15	21	0,020	**PHP 21-T5-14RSB**
		23,88	15	1F	23,05	28	6	10	16	15	21	0,020	**PHP 21-T5-15RSB**
		25,47	16	1F	24,60	30	6	11	18	15	21	0,030	**PHP 21-T5-16RSB**
		27,06	17	1F	26,20	32	6	12	19	15	21	0,030	**PHP 21-T5-17RSB**
		28,65	18	1F	27,80	32	6	13	20	15	21	0,030	**PHP 21-T5-18RSB**
		30,25	19	1F	29,40	36	6	14	22	15	21	0,040	**PHP 21-T5-19RSB**
		31,83	20	1F	31,00	36	6	15	24	15	21	0,040	**PHP 21-T5-20RSB**
		33,42	21	1F	32,55	38	6	15	24	15	21	0,040	**PHP 21-T5-21RSB**
		35,01	22	1F	34,15	38	6	15	24	15	21	0,050	**PHP 21-T5-22RSB**
		36,61	23	1F	35,75	42	6	16	25	15	21	0,050	**PHP 21-T5-23RSB**
		38,21	24	1F	37,40	44	6	17	26	15	21	0,050	**PHP 21-T5-24RSB**
		39,80	25	1F	38,95	44	6	17	26	15	21	0,060	**PHP 21-T5-25RSB**
		41,45	26	1F	40,60	44	6	17	26	15	21	0,060	**PHP 21-T5-26RSB**
		42,98	27	1F	42,20	48	8	19	30	15	21	0,060	**PHP 21-T5-27RSB**
		44,56	28	1F	43,75	48	8	20	32	15	21	0,060	**PHP 21-T5-28RSB**
		47,76	30	1F	46,95	51	8	22	34	15	21	0,080	**PHP 21-T5-30RSB**
		50,94	32	1F	50,10	54	8	24	38	15	21	0,090	**PHP 21-T5-32RSB**
		55,70	35	1F	54,85	59	8	24	38	15	21	0,100	**PHP 21-T5-35RSB**
		57,31	36	1F	56,45	63	8	24	38	15	21	0,110	**PHP 21-T5-36RSB**
		60,48	38	1F	59,65	66	8	26	40	15	21	0,130	**PHP 21-T5-38RSB**
		63,66	40	1F	62,85	66	8	26	40	15	21	0,140	**PHP 21-T5-40RSB**
		66,84	42	1F	66,00	71	8	26	40	15	21	0,180	**PHP 21-T5-42RSB**
		70,20	44	1	69,35	–	8	29	45	15	21	0,190	**PHP 21-T5-44RSB**
		71,62	45	1	70,80	–	8	31	45	15	21	0,190	**PHP 21-T5-45RSB**
		76,39	48	1	75,55	–	8	32	50	15	21	0,200	**PHP 21-T5-48RSB**
		85,94	54	1	85,10	–	8	35	55	15	21	0,240	**PHP 21-T5-54RSB**
		90,72	57	1	89,90	–	8	38	60	15	21	0,270	**PHP 21-T5-57RSB**
		95,49	60	1	94,65	–	8	42	65	15	21	0,310	**PHP 21-T5-60RSB**
5	**16**	15,92	10	1F	15,05	20	4	5	8	21	27	0,020	**PHP 27-T5-10RSB**
		17,51	11	1F	16,65	22	4	6	10	21	27	0,020	**PHP 27-T5-11RSB**
		19,10	12	1F	18,25	23	4	7	12	21	27	0,020	**PHP 27-T5-12RSB**
		20,69	13	1F	19,85	25	6	8	13	21	27	0,020	**PHP 27-T5-13RSB**
		22,29	14	1F	21,45	26	6	9	14	21	27	0,030	**PHP 27-T5-14RSB**
		23,88	15	1F	23,05	28	6	10	16	21	27	0,030	**PHP 27-T5-15RSB**
		25,47	16	1F	24,60	32	6	11	18	21	27	0,040	**PHP 27-T5-16RSB**
		27,06	17	1F	26,20	32	6	12	19	21	27	0,040	**PHP 27-T5-17RSB**
		28,65	18	1F	27,80	33	6	13	20	21	27	0,050	**PHP 27-T5-18RSB**
		30,25	19	1F	29,40	36	6	14	22	21	27	0,050	**PHP 27-T5-19RSB**

Pitch	Belt width	Pitch diameter	Number of teeth	Pulley type	Dimensions Outer diameter							Mass	Designation
		PD			OD	A	B Min.	Max.	H	F	L		
–	mm		–	–	mm							kg	–
5	**16**	31,83	20	1F	31,00	36	6	15	24	21	27	0,050	**PHP 27-T5-20RSB**
		33,42	21	1F	32,55	38	6	15	24	21	27	0,050	**PHP 27-T5-21RSB**
		35,01	22	1F	34,15	38	6	15	24	21	27	0,050	**PHP 27-T5-22RSB**
		36,61	23	1F	35,75	42	6	16	25	21	27	0,060	**PHP 27-T5-23RSB**
		38,21	24	1F	37,40	42	6	17	26	21	27	0,080	**PHP 27-T5-24RSB**
		39,80	25	1F	38,95	44	6	17	26	21	27	0,080	**PHP 27-T5-25RSB**
		41,45	26	1F	40,60	44	6	17	26	21	27	0,090	**PHP 27-T5-26RSB**
		42,98	27	1F	42,20	48	8	19	30	21	27	0,090	**PHP 27-T5-27RSB**
		44,56	28	1F	43,75	48	8	20	32	21	27	0,090	**PHP 27-T5-28RSB**
		47,76	30	1F	46,95	51	8	22	34	21	27	0,110	**PHP 27-T5-30RSB**
		50,94	32	1F	50,10	54	8	24	38	21	27	0,120	**PHP 27-T5-32RSB**
		55,70	35	1F	54,85	59	8	24	38	21	27	0,140	**PHP 27-T5-35RSB**
		57,31	36	1F	56,45	63	8	24	38	21	27	0,160	**PHP 27-T5-36RSB**
		60,48	38	1F	59,65	66	8	26	40	21	27	0,180	**PHP 27-T5-38RSB**
		63,66	40	1F	62,85	66	8	26	40	21	27	0,190	**PHP 27-T5-40RSB**
		66,84	42	1F	66,00	71	8	26	40	21	27	0,210	**PHP 27-T5-42RSB**
		70,20	44	1	69,35	–	8	29	45	21	27	0,230	**PHP 27-T5-44RSB**
		71,62	45	1	70,80	–	8	29	45	21	27	0,260	**PHP 27-T5-45RSB**
		76,39	48	1	75,55	–	8	32	50	21	27	0,280	**PHP 27-T5-48RSB**
		85,94	54	1	85,10	–	8	35	55	21	27	0,330	**PHP 27-T5-54RSB**
		90,72	57	1	89,90	–	8	38	60	21	27	0,380	**PHP 27-T5-57RSB**
		95,49	60	1	94,65	–	8	42	65	21	27	0,430	**PHP 27-T5-60RSB**
5	**25**	15,92	10	1F	15,05	20	4	5	8	30	36	0,020	**PHP 36-T5-10RSB**
		17,51	11	1F	16,65	22	4	6	10	30	36	0,030	**PHP 36-T5-11RSB**
		19,10	12	1F	18,25	23	4	7	12	30	36	0,030	**PHP 36-T5-12RSB**
		20,69	13	1F	19,85	25	6	8	13	30	36	0,030	**PHP 36-T5-13RSB**
		22,29	14	1F	21,45	26	6	9	14	30	36	0,040	**PHP 36-T5-14RSB**
		23,88	15	1F	23,05	28	6	10	16	30	36	0,040	**PHP 36-T5-15RSB**
		25,47	16	1F	24,60	32	6	11	18	30	36	0,050	**PHP 36-T5-16RSB**
		27,06	17	1F	26,20	32	6	12	19	30	36	0,060	**PHP 36-T5-17RSB**
		28,65	18	1F	27,80	32	6	13	20	30	36	0,060	**PHP 36-T5-18RSB**
		30,25	19	1F	29,40	36	6	14	22	30	36	0,070	**PHP 36-T5-19RSB**
		31,83	20	1F	31,00	36	6	15	24	30	36	0,080	**PHP 36-T5-20RSB**
		33,42	21	1F	32,55	38	6	15	24	30	36	0,080	**PHP 36-T5-21RSB**
		35,01	22	1F	34,15	38	6	15	24	30	36	0,080	**PHP 36-T5-22RSB**
		36,61	23	1F	35,75	42	6	15	25	30	36	0,090	**PHP 36-T5-23RSB**
		38,21	24	1F	37,40	42	6	17	26	30	36	0,110	**PHP 36-T5-24RSB**
		39,80	25	1F	38,95	44	6	17	26	30	36	0,120	**PHP 36-T5-25RSB**
		41,45	26	1F	40,60	44	6	17	26	30	36	0,120	**PHP 36-T5-26RSB**
		42,98	27	1F	42,20	48	8	19	30	30	36	0,130	**PHP 36-T5-27RSB**
		44,56	28	1F	43,75	48	8	20	32	30	36	0,130	**PHP 36-T5-28RSB**
		47,76	30	1F	46,95	51	8	22	34	30	36	0,150	**PHP 36-T5-30RSB**
		50,94	32	1F	50,10	54	8	24	38	30	36	0,180	**PHP 36-T5-32RSB**
		55,70	35	1F	54,85	59	8	24	38	30	36	0,210	**PHP 36-T5-35RSB**
		57,31	36	1F	56,45	63	8	24	38	30	36	0,230	**PHP 36-T5-36RSB**
		60,48	38	1F	59,65	66	8	26	40	30	36	0,250	**PHP 36-T5-38RSB**
		63,66	40	1F	62,85	66	8	26	40	30	36	0,280	**PHP 36-T5-40RSB**
		66,84	42	1F	66,00	71	8	26	40	30	36	0,280	**PHP 36-T5-42RSB**
		70,20	44	1	69,35	–	8	29	45	30	36	0,320	**PHP 36-T5-44RSB**
		71,62	45	1	70,80	–	8	29	45	30	36	0,360	**PHP 36-T5-45RSB**
		76,39	48	1	75,55	–	8	32	50	30	36	0,400	**PHP 36-T5-48RSB**
		85,94	54	1	85,10	–	8	35	55	30	36	0,470	**PHP 36-T5-54RSB**
		90,72	57	1	89,90	–	8	38	60	30	36	0,540	**PHP 36-T5-57RSB**
		95,49	60	1	94,65	–	8	42	65	30	36	0,610	**PHP 36-T5-60RSB**
10	**16**	38,20	12	1F	36,35	42	6	18	28	21	31	0,080	**PHP 31-T10-12RSB**
		41,38	13	1F	39,55	44	6	19	32	21	31	0,090	**PHP 31-T10-13RSB**
		44,56	14	1F	42,70	48	8	21	32	21	31	0,100	**PHP 31-T10-14RSB**
		47,75	15	1F	45,90	51	8	21	32	21	31	0,120	**PHP 31-T10-15RSB**
		50,93	16	1F	49,10	54	8	23	35	21	31	0,130	**PHP 31-T10-16RSB**
		54,11	17	1F	52,25	58	8	24	38	21	31	0,150	**PHP 31-T10-17RSB**
		57,29	18	1F	55,45	60	8	26	40	21	31	0,170	**PHP 31-T10-18RSB**
		60,48	19	1F	58,65	66	8	28	44	21	31	0,180	**PHP 31-T10-19RSB**
		63,66	20	1F	61,80	66	8	30	46	21	31	0,210	**PHP 31-T10-20RSB**
		66,85	21	1F	65,00	71	8	36	48	21	31	0,230	**PHP 31-T10-21RSB**
		70,03	22	1F	68,20	75	8	34	52	21	31	0,250	**PHP 31-T10-22RSB**
		73,21	23	1F	71,35	77	8	36	55	21	31	0,270	**PHP 31-T10-23RSB**
		76,39	24	1F	74,55	83	8	38	58	21	31	0,290	**PHP 31-T10-24RSB**
		79,58	25	1F	77,75	83	8	39	60	21	31	0,310	**PHP 31-T10-25RSB**
		82,76	26	1F	80,90	87	8	39	60	21	31	0,360	**PHP 31-T10-26RSB**
		85,95	27	1F	84,10	91	8	39	60	21	31	0,360	**PHP 31-T10-27RSB**
		89,25	28	1F	87,25	93	8	39	60	21	31	0,400	**PHP 31-T10-28RSB**
		95,49	30	1F	93,65	99	8	39	60	21	31	0,440	**PHP 31-T10-30RSB**
		101,86	32	1F	100,00	106	10	42	65	21	31	0,490	**PHP 31-T10-32RSB**

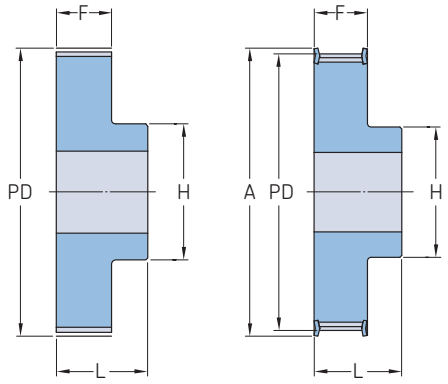

Type 1 Type 1F

Pitch	Belt width	Pitch diameter PD	Number of teeth	Pulley type	Dimensions Outer diameter OD	A	B Min.	B Max.	H	F	L	Mass	Designation
–	mm		–	–	mm							kg	–
10	**16**	111,41	35	1F	109,55	115	10	45	70	21	31	0,560	**PHP 31-T10-35RSB**
		114,59	36	1F	112,75	119	10	45	70	21	31	0,620	**PHP 31-T10-36RSB**
		120,96	38	1F	119,10	125	10	48	75	21	31	0,690	**PHP 31-T10-38RSB**
		127,32	40	1F	125,45	131	10	52	80	21	31	0,770	**PHP 31-T10-40RSB**
		133,69	42	1	131,85	–	10	52	80	21	31	0,880	**PHP 31-T10-42RSB**
		140,06	44	1	138,20	–	10	57	88	21	31	0,990	**PHP 31-T10-44RSB**
		143,24	45	1	141,40	–	16	57	90	21	31	1,040	**PHP 31-T10-45RSB**
		152,78	48	1	150,95	–	16	62	95	21	31	1,090	**PHP 31-T10-48RSB**
		171,89	54	1	170,05	–	16	66	100	21	31	1,300	**PHP 31-T10-54RSB**
		181,44	57	1	179,60	–	16	66	110	21	31	1,500	**PHP 31-T10-57RSB**
		190,98	60	1	189,15	–	16	72	110	21	31	1,710	**PHP 31-T10-60RSB**
10	**25**	38,20	12	1F	36,35	42	6	18	28	30	40	0,100	**PHP 40-T10-12RSB**
		41,38	13	1F	39,55	44	6	19	30	30	40	0,120	**PHP 40-T10-13RSB**
		44,56	14	1F	42,70	48	8	21	32	30	40	0,130	**PHP 40-T10-14RSB**
		47,75	15	1F	45,90	51	8	21	32	30	40	0,150	**PHP 40-T10-15RSB**
		50,93	16	1F	49,10	54	8	23	35	30	40	0,180	**PHP 40-T10-16RSB**
		54,11	17	1F	52,25	58	8	24	37	30	40	0,200	**PHP 40-T10-17RSB**
		57,29	18	1F	55,45	60	8	26	40	30	40	0,220	**PHP 40-T10-18RSB**
		60,48	19	1F	58,65	66	8	28	44	30	40	0,250	**PHP 40-T10-19RSB**
		63,66	20	1F	61,80	66	8	30	46	30	40	0,280	**PHP 40-T10-20RSB**
		66,85	21	1F	65,00	71	8	32	49	30	40	0,300	**PHP 40-T10-21RSB**
		70,03	22	1F	68,20	75	8	34	52	30	40	0,340	**PHP 40-T10-22RSB**
		73,21	23	1F	71,35	77	8	36	55	30	40	0,360	**PHP 40-T10-23RSB**
		76,39	24	1F	74,55	83	8	38	58	30	40	0,390	**PHP 40-T10-24RSB**
		79,58	25	1F	77,75	83	8	39	60	30	40	0,420	**PHP 40-T10-25RSB**
		82,76	26	1F	80,90	87	8	39	60	30	40	0,480	**PHP 40-T10-26RSB**
		85,95	27	1F	84,10	91	8	39	60	30	40	0,540	**PHP 40-T10-27RSB**
		89,25	28	1F	87,25	93	8	39	60	30	40	0,540	**PHP 40-T10-28RSB**
		95,49	30	1F	93,65	99	8	39	60	30	40	0,640	**PHP 40-T10-30RSB**
		101,86	32	1F	100,00	106	10	42	65	30	40	0,690	**PHP 40-T10-32RSB**
		111,41	35	1F	109,55	115	10	45	70	30	40	0,780	**PHP 40-T10-35RSB**
		114,59	36	1F	112,75	119	10	45	70	30	40	0,870	**PHP 40-T10-36RSB**
		120,96	38	1F	119,10	125	10	48	75	30	40	0,970	**PHP 40-T10-38RSB**
		127,32	40	1F	125,45	131	10	52	80	30	40	1,070	**PHP 40-T10-40RSB**
		133,69	42	1	131,85	–	10	52	80	30	40	1,210	**PHP 40-T10-42RSB**
		140,06	44	1	138,20	–	10	57	88	30	40	1,350	**PHP 40-T10-44RSB**
		143,24	45	1	141,40	–	16	59	90	30	40	1,430	**PHP 40-T10-45RSB**
		152,78	48	1	150,95	–	16	62	95	30	40	1,520	**PHP 40-T10-48RSB**
		171,89	54	1	170,05	–	16	65	100	30	40	1,790	**PHP 40-T10-54RSB**
		181,44	57	1	179,60	–	16	72	110	30	40	2,060	**PHP 40-T10-57RSB**
		190,98	60	1	189,15	–	16	72	110	30	40	2,340	**PHP 40-T10-60RSB**
10	**32**	57,30	18	1F	55,45	60	10	26	40	37	47	0,250	**PHP 47-T10-18RSB**
		60,48	19	1F	58,65	66	10	28	44	37	47	0,290	**PHP 47-T10-19RSB**
		63,66	20	1F	61,80	66	12	30	46	37	47	0,320	**PHP 47-T10-20RSB**
		66,85	21	1F	65,00	71	12	32	49	37	47	0,360	**PHP 47-T10-21RSB**
		70,03	22	1F	68,20	75	12	34	52	37	47	0,390	**PHP 47-T10-22RSB**
		73,21	23	1F	71,35	77	12	36	55	37	47	0,430	**PHP 47-T10-23RSB**
		76,39	24	1F	74,55	83	12	38	58	37	47	0,480	**PHP 47-T10-24RSB**
		79,58	25	1F	77,75	83	12	39	60	37	47	0,530	**PHP 47-T10-25RSB**
		82,76	26	1F	80,90	87	12	39	60	37	47	0,560	**PHP 47-T10-26RSB**
		85,94	27	1F	84,10	91	12	39	60	37	47	0,600	**PHP 47-T10-27RSB**
		89,13	28	1F	87,25	93	12	39	60	37	47	0,640	**PHP 47-T10-28RSB**
		95,49	30	1F	93,65	99	12	39	60	37	47	0,740	**PHP 47-T10-30RSB**

Pitch	Belt width	Pitch diameter	Number of teeth	Pulley type	Dimensions Outer diameter							Mass	Designation
		PD			OD	A	B Min.	Max.	H	F	L		
–	mm		–	–	mm							kg	–
10	**32**	101,86	32	1F	100,00	106	12	42	65	37	47	0,840	**PHP 47-T10-32RSB**
		111,41	35	1F	109,55	115	16	45	70	37	47	0,960	**PHP 47-T10-35RSB**
		114,59	36	1F	112,75	119	16	45	70	37	47	1,080	**PHP 47-T10-36RSB**
		120,96	38	1F	119,10	125	16	48	75	37	47	1,200	**PHP 47-T10-38RSB**
		127,32	40	1F	125,45	131	16	52	80	37	47	1,320	**PHP 47-T10-40RSB**
		133,69	42	1	131,85	–	16	52	80	37	47	1,460	**PHP 47-T10-42RSB**
		140,06	44	1	138,20	–	16	57	88	37	47	1,610	**PHP 47-T10-44RSB**
		143,24	45	1	141,40	–	16	58	90	37	47	1,770	**PHP 47-T10-45RSB**
		152,79	48	1	150,95	–	16	62	95	37	47	1,930	**PHP 47-T10-48RSB**
		171,89	54	1	170,05	–	16	65	100	37	47	2,290	**PHP 47-T10-54RSB**
		181,44	57	1	179,60	–	16	72	110	37	47	2,650	**PHP 47-T10-57RSB**
		190,99	60	1	189,15	–	16	72	110	37	47	3,000	**PHP 47-T10-60RSB**
10	**50**	57,30	18	1F	55,45	60	10	26	40	56	66	0,420	**PHP 66-T10-18RSB**
		60,48	19	1F	58,65	66	10	28	44	56	66	0,470	**PHP 66-T10-19RSB**
		63,66	20	1F	61,80	66	12	30	46	56	66	0,520	**PHP 66-T10-20RSB**
		66,85	21	1F	65,00	71	12	32	49	56	66	0,550	**PHP 66-T10-21RSB**
		70,03	22	1F	68,20	75	12	34	52	56	66	0,570	**PHP 66-T10-22RSB**
		73,21	23	1F	71,35	77	12	36	55	56	66	0,650	**PHP 66-T10-23RSB**
		76,39	24	1F	74,55	83	12	38	58	56	66	0,740	**PHP 66-T10-24RSB**
		79,58	25	1F	77,75	83	12	39	60	56	66	0,770	**PHP 66-T10-25RSB**
		82,76	26	1F	80,90	87	12	39	60	56	66	0,820	**PHP 66-T10-26RSB**
		85,94	27	1F	84,10	91	12	39	60	56	66	0,950	**PHP 66-T10-27RSB**
		89,13	28	1F	87,25	93	12	39	60	56	66	0,960	**PHP 66-T10-28RSB**
		95,49	30	1F	93,65	99	12	39	60	56	66	1,170	**PHP 66-T10-30RSB**
		101,86	32	1F	100,00	106	12	42	65	56	66	1,300	**PHP 66-T10-32RSB**
		111,41	35	1F	109,55	115	16	45	70	56	66	1,470	**PHP 66-T10-35RSB**
		114,59	36	1F	112,75	119	16	45	70	56	66	1,640	**PHP 66-T10-36RSB**
		120,96	38	1F	119,10	125	16	48	75	56	66	1,820	**PHP 66-T10-38RSB**
		127,32	40	1F	125,45	131	16	52	80	56	66	2,000	**PHP 66-T10-40RSB**
		133,69	42	1	131,85	–	16	57	80	56	66	2,180	**PHP 66-T10-42RSB**
		140,06	44	1	138,20	–	16	52	88	56	66	2,360	**PHP 66-T10-44RSB**
		143,24	45	1	141,40	–	16	58	90	56	66	2,590	**PHP 66-T10-45RSB**
		152,79	48	1	150,95	–	16	62	95	56	66	2,830	**PHP 66-T10-48RSB**
		171,89	54	1	170,05	–	16	65	100	56	66	3,340	**PHP 66-T10-54RSB**
		181,44	57	1	179,60	–	16	72	110	56	66	3,850	**PHP 66-T10-57RSB**
		190,99	60	1	189,15	–	16	72	110	56	66	4,370	**PHP 66-T10-60RSB**

Metric timing pulleys

5 mm pitch type AT pilot bore (RSB)

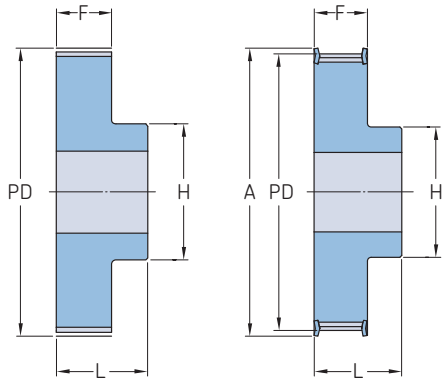

Type 1 Type 1F

Pitch	Belt width	Pitch diameter	Number of teeth	Pulley type	Dimensions Outer diameter							Mass	Designation
		PD			OD	A	B Min.	Max.	H	F	L		
mm			–	–	mm							kg	–
5	**10**	15,92	10	1F	14,65	20	4	5	8	15	21	0,01	**PHP 21-AT5-10RSB**
		19,10	12	1F	17,85	23	4	7	12	15	21	0,02	**PHP 21-AT5-12RSB**
		20,69	13	1F	19,45	25	6	8	13	15	21	0,02	**PHP 21-AT5-13RSB**
		22,29	14	1F	21,05	26	6	9	14	15	21	0,02	**PHP 21-AT5-14RSB**
		23,88	15	1F	22,65	28	6	10	16	15	21	0,02	**PHP 21-AT5-15RSB**
		25,47	16	1F	24,20	32	6	11	18	15	21	0,03	**PHP 21-AT5-16RSB**
		27,06	17	1F	25,80	32	6	12	19	15	21	0,03	**PHP 21-AT5-17RSB**
		28,65	18	1F	27,40	32	6	13	20	15	21	0,03	**PHP 21-AT5-18RSB**
		30,25	19	1F	29,00	36	6	14	22	15	21	0,04	**PHP 21-AT5-19RSB**
		31,83	20	1F	30,60	36	6	15	23	15	21	0,04	**PHP 21-AT5-20RSB**
		33,42	21	1F	32,20	38	6	15	24	15	21	0,04	**PHP 21-AT5-21RSB**
		35,02	22	1F	33,85	38	6	15	24	15	21	0,05	**PHP 21-AT5-22RSB**
		36,61	23	1F	35,40	42	6	17	25	15	21	0,05	**PHP 21-AT5-23RSB**
		38,21	24	1F	37,00	44	6	17	26	15	21	0,05	**PHP 21-AT5-24RSB**
		39,80	25	1F	38,60	44	6	17	26	15	21	0,06	**PHP 21-AT5-25RSB**
		41,38	26	1F	40,20	44	6	17	26	15	21	0,06	**PHP 21-AT5-26RSB**
		42,98	27	1F	41,80	48	8	19	30	15	21	0,06	**PHP 21-AT5-27RSB**
		44,56	28	1F	43,35	48	8	20	32	15	21	0,07	**PHP 21-AT5-28RSB**
		47,76	30	1F	46,55	51	8	22	34	15	21	0,08	**PHP 21-AT5-30RSB**
		50,94	32	1F	49,70	54	8	24	38	15	21	0,09	**PHP 21-AT5-32RSB**
		57,31	36	1F	56,05	63	8	24	38	15	21	0,11	**PHP 21-AT5-36RSB**
		60,48	38	1F	59,25	66	8	26	40	15	21	0,13	**PHP 21-AT5-38RSB**
		63,66	40	1F	62,45	66	8	26	40	15	21	0,14	**PHP 21-AT5-40RSB**
		66,74	42	1F	65,60	71	8	26	40	15	21	0,18	**PHP 21-AT5-42RSB**
		70,05	44	1	68,80	–	8	29	45	15	21	0,19	**PHP 21-AT5-44RSB**
		71,62	45	1	70,35	–	8	29	45	15	21	0,19	**PHP 21-AT5-45RSB**
		76,42	48	1	75,15	–	8	32	50	15	21	0,20	**PHP 21-AT5-48RSB**
		95,52	60	1	94,25	–	8	37	65	15	21	0,31	**PHP 21-AT5-60RSB**
		114,62	72	1	113,15	–	10	42	80	15	21	0,41	**PHP 21-AT5-72RSB**
5	**16**	15,92	10	1F	14,65	20	4	5	8	21	27	0,02	**PHP 27-AT5-10RSB**
		19,10	12	1F	17,85	23	4	7	12	21	27	0,02	**PHP 27-AT5-12RSB**
		20,69	13	1F	19,45	25	6	8	13	21	27	0,02	**PHP 27-AT5-13RSB**
		22,29	14	1F	21,05	26	6	9	14	21	27	0,03	**PHP 27-AT5-14RSB**
		23,88	15	1F	22,65	28	6	10	16	21	27	0,03	**PHP 27-AT5-15RSB**
		25,47	16	1F	24,20	32	6	11	18	21	27	0,04	**PHP 27-AT5-16RSB**
		27,06	17	1F	25,80	32	6	12	19	21	27	0,04	**PHP 27-AT5-17RSB**
		28,65	18	1F	27,40	32	6	13	20	21	27	0,04	**PHP 27-AT5-18RSB**
		30,25	19	1F	29,00	36	6	14	22	21	27	0,05	**PHP 27-AT5-19RSB**
		31,83	20	1F	30,60	36	6	15	23	21	27	0,05	**PHP 27-AT5-20RSB**
		33,42	21	1F	32,20	38	6	15	24	21	27	0,05	**PHP 27-AT5-21RSB**
		35,02	22	1F	33,85	38	6	15	24	21	27	0,05	**PHP 27-AT5-22RSB**
		36,61	23	1F	35,40	42	6	17	25	21	27	0,07	**PHP 27-AT5-23RSB**
		38,21	24	1F	37,00	44	6	17	26	21	27	0,08	**PHP 27-AT5-24RSB**
		39,80	25	1F	38,60	44	6	17	26	21	27	0,08	**PHP 27-AT5-25RSB**
		41,38	26	1F	40,20	44	6	17	26	21	27	0,09	**PHP 27-AT5-26RSB**
		42,98	27	1F	41,80	48	8	19	30	21	27	0,09	**PHP 27-AT5-27RSB**
		44,56	28	1F	43,35	48	8	20	32	21	27	0,09	**PHP 27-AT5-28RSB**
		47,76	30	1F	46,55	51	8	22	34	21	27	0,11	**PHP 27-AT5-30RSB**
		50,94	32	1F	49,70	54	8	24	38	21	27	0,12	**PHP 27-AT5-32RSB**
		57,31	36	1F	56,05	63	8	24	38	21	27	0,16	**PHP 27-AT5-36RSB**
		60,48	38	1F	59,25	66	8	26	40	21	27	0,18	**PHP 27-AT5-38RSB**
		63,66	40	1F	62,45	66	8	26	40	21	27	0,19	**PHP 27-AT5-40RSB**
		66,74	42	1F	65,60	71	8	26	40	21	27	0,21	**PHP 27-AT5-42RSB**
		70,05	44	1	68,80	–	8	29	45	21	27	0,23	**PHP 27-AT5-44RSB**

Pitch	Belt width	Pitch diameter	Number of teeth	Pulley type	Dimensions Outer diameter							Mass	Designation
		PD			OD	A	B Min.	Max.	H	F	L		
mm			–	–	mm							kg	–
5	**16**	71,62	45	1	70,35	–	8	29	45	21	27	0,26	**PHP 27-AT5-45RSB**
		76,42	48	1	75,15	–	8	32	50	21	27	0,28	**PHP 27-AT5-48RSB**
		95,52	60	1	94,25	–	8	37	65	21	27	0,43	**PHP 27-AT5-60RSB**
		114,62	72	1	113,15	–	10	42	80	21	27	0,41	**PHP 27-AT5-72RSB**
5	**25**	15,92	10	1F	14,65	20	4	5	8	30	36	0,02	**PHP 36-AT5-10RSB**
		19,10	12	1F	17,85	23	6	7	12	30	36	0,03	**PHP 36-AT5-12RSB**
		20,69	13	1F	19,45	25	6	8	13	30	36	0,03	**PHP 36-AT5-13RSB**
		22,29	14	1F	21,05	26	6	9	14	30	36	0,04	**PHP 36-AT5-14RSB**
		23,88	15	1F	22,65	28	6	10	16	30	36	0,04	**PHP 36-AT5-15RSB**
		25,47	16	1F	24,20	32	6	11	18	30	36	0,05	**PHP 36-AT5-16RSB**
		27,06	17	1F	25,80	32	6	12	19	30	36	0,06	**PHP 36-AT5-17RSB**
		28,65	18	1F	27,40	32	6	13	20	30	36	0,06	**PHP 36-AT5-18RSB**
		30,25	19	1F	29,00	36	6	14	22	30	36	0,07	**PHP 36-AT5-19RSB**
		31,83	20	1F	30,60	36	6	15	23	30	36	0,08	**PHP 36-AT5-20RSB**
		33,42	21	1F	32,20	38	6	15	24	30	36	0,08	**PHP 36-AT5-21RSB**
		35,02	22	1F	33,85	38	6	15	24	30	36	0,08	**PHP 36-AT5-22RSB**
		36,61	23	1F	35,40	42	6	16	25	30	36	0,09	**PHP 36-AT5-23RSB**
		38,21	24	1F	37,00	44	8	17	26	30	36	0,11	**PHP 36-AT5-24RSB**
		39,80	25	1F	38,60	44	8	17	26	30	36	0,12	**PHP 36-AT5-25RSB**
		41,38	26	1F	40,20	44	8	17	26	30	36	0,12	**PHP 36-AT5-26RSB**
		42,98	27	1F	41,80	48	8	19	30	30	36	0,13	**PHP 36-AT5-27RSB**
		44,56	28	1F	43,35	48	8	20	32	30	36	0,13	**PHP 36-AT5-28RSB**
		47,76	30	1F	46,55	51	8	22	34	30	36	0,15	**PHP 36-AT5-30RSB**
		50,94	32	1F	49,70	54	8	24	38	30	36	0,18	**PHP 36-AT5-32RSB**
		57,31	36	1F	56,05	63	8	24	38	30	36	0,23	**PHP 36-AT5-36RSB**
		60,48	38	1F	59,25	66	8	26	40	30	36	0,25	**PHP 36-AT5-38RSB**
		63,66	40	1F	62,45	66	8	26	40	30	36	0,28	**PHP 36-AT5-40RSB**
		66,74	42	1F	65,60	71	8	26	40	30	36	0,28	**PHP 36-AT5-42RSB**
		70,05	44	1	68,80	–	8	29	45	30	36	0,32	**PHP 36-AT5-44RSB**
		71,62	45	1	70,35	–	8	30	45	30	36	0,36	**PHP 36-AT5-45RSB**
		76,42	48	1	75,15	–	8	32	50	30	36	0,40	**PHP 36-AT5-48RSB**
		95,52	60	1	94,25	–	8	37	65	30	36	0,61	**PHP 36-AT5-60RSB**
		114,62	72	1	113,15	–	10	42	80	30	36	0,83	**PHP 36-AT5-72RSB**
10	**16**	38,20	12	1F	36,35	42	6	18	28	21	31	0,08	**PHP 31-AT10-12RSB**
		44,60	14	1F	42,70	48	8	21	32	21	31	0,10	**PHP 31-AT10-14RSB**
		47,75	15	1F	45,90	51	8	21	32	21	31	0,12	**PHP 31-AT10-15RSB**
		50,93	16	1F	49,05	54	8	23	35	21	31	0,13	**PHP 31-AT10-16RSB**
		54,11	17	1F	52,25	58	8	24	38	21	31	0,15	**PHP 31-AT10-17RSB**
		57,29	18	1F	55,45	60	8	26	40	21	31	0,17	**PHP 31-AT10-18RSB**
		60,48	19	1F	58,65	66	8	28	44	21	31	0,19	**PHP 31-AT10-19RSB**
		63,66	20	1F	61,80	66	8	30	46	21	31	0,21	**PHP 31-AT10-20RSB**
		66,85	21	1F	65,00	71	8	32	48	21	31	0,23	**PHP 31-AT10-21RSB**
		70,03	22	1F	68,15	75	8	34	52	21	31	0,25	**PHP 31-AT10-22RSB**
		73,21	23	1F	71,35	77	8	36	55	21	31	0,27	**PHP 31-AT10-23RSB**
		76,39	24	1F	74,55	83	8	38	58	21	31	0,29	**PHP 31-AT10-24RSB**
		79,58	25	1F	77,75	83	8	39	60	21	31	0,31	**PHP 31-AT10-25RSB**
		82,76	26	1F	80,90	87	8	39	60	21	31	0,36	**PHP 31-AT10-26RSB**
		85,95	27	1F	84,10	91	8	39	60	21	31	0,36	**PHP 31-AT10-27RSB**
		89,25	28	1F	87,25	93	8	39	60	21	31	0,40	**PHP 31-AT10-28RSB**
		95,49	30	1F	93,65	99	8	39	60	21	31	0,44	**PHP 31-AT10-30RSB**
		101,86	32	1F	100,00	106	10	42	65	21	31	0,49	**PHP 31-AT10-32RSB**
		114,59	36	1F	112,75	119	10	45	70	21	31	0,63	**PHP 31-AT10-36RSB**
		120,96	38	1F	119,10	125	10	48	75	21	31	0,70	**PHP 31-AT10-38RSB**
		127,32	40	1F	125,45	131	10	52	80	21	31	0,77	**PHP 31-AT10-40RSB**
		133,69	42	1	131,85	–	10	57	80	21	31	0,88	**PHP 31-AT10-42RSB**
		140,05	44	1	138,20	–	10	57	88	21	31	0,99	**PHP 31-AT10-44RSB**
		143,24	45	1	141,40	–	16	59	90	21	31	1,01	**PHP 31-AT10-45RSB**
		152,78	48	1	150,95	–	16	62	95	21	31	1,09	**PHP 31-AT10-48RSB**
		190,98	60	1	189,15	–	16	72	110	21	31	1,71	**PHP 31-AT10-60RSB**
10	**25**	38,20	12	1F	36,40	42	6	18	28	30	40	0,10	**PHP 40-AT10-12RSB**
		44,60	14	1F	42,70	48	8	21	32	30	40	0,13	**PHP 40-AT10-14RSB**
		47,80	15	1F	45,90	51	8	21	32	30	40	0,15	**PHP 40-AT10-15RSB**
		50,90	16	1F	49,10	54	8	23	35	30	40	0,18	**PHP 40-AT10-16RSB**
		54,10	17	1F	52,20	58	8	24	37	30	40	0,20	**PHP 40-AT10-17RSB**
		57,30	18	1F	55,50	60	8	26	40	30	40	0,22	**PHP 40-AT10-18RSB**
		60,50	19	1F	58,60	66	8	28	44	30	40	0,25	**PHP 40-AT10-19RSB**
		63,70	20	1F	61,80	66	8	30	46	30	40	0,28	**PHP 40-AT10-20RSB**
		66,80	21	1F	65,00	71	8	32	49	30	40	0,31	**PHP 40-AT10-21RSB**
		70,00	22	1F	68,20	75	8	34	52	30	40	0,34	**PHP 40-AT10-22RSB**
		73,20	23	1F	71,30	77	8	36	55	30	40	0,36	**PHP 40-AT10-23RSB**
		76,40	24	1F	74,50	83	8	38	58	30	40	0,39	**PHP 40-AT10-24RSB**
		79,60	25	1F	77,80	83	8	39	60	30	40	0,42	**PHP 40-AT10-25RSB**
		82,80	26	1F	80,90	87	8	39	60	30	40	0,48	**PHP 40-AT10-26RSB**

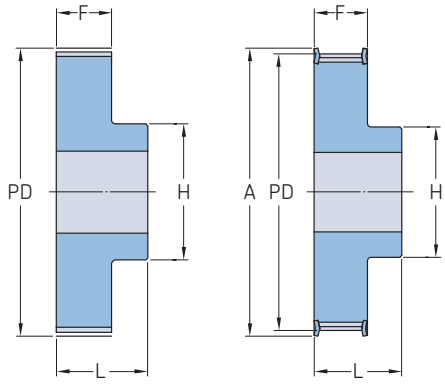

Type 1 Type 1F

Pitch	Belt width	Pitch diameter PD	Number of teeth	Pulley type	Dimensions Outer diameter OD	A	B Min.	B Max.	H	F	L	Mass	Designation
mm			–	–	mm							kg	–
10	**25**	86,00	27	1F	84,10	91	8	39	60	30	40	0,54	**PHP 40-AT10-27RSB**
		89,20	28	1F	87,20	93	8	39	60	30	40	0,54	**PHP 40-AT10-28RSB**
		95,50	30	1F	93,70	99	8	39	60	30	40	0,64	**PHP 40-AT10-30RSB**
		101,90	32	1F	100,00	106	10	42	65	30	40	0,69	**PHP 40-AT10-32RSB**
		114,60	36	1F	112,80	119	10	45	70	30	40	0,87	**PHP 40-AT10-36RSB**
		121,00	38	1F	119,10	125	10	48	75	30	40	0,97	**PHP 40-AT10-38RSB**
		127,30	40	1F	125,50	131	10	52	80	30	40	1,07	**PHP 40-AT10-40RSB**
		133,70	42	1	131,80	–	10	57	80	30	40	1,21	**PHP 40-AT10-42RSB**
		140,10	44	1	138,20	–	10	57	88	30	40	1,35	**PHP 40-AT10-44RSB**
		143,20	45	1	141,40	–	16	59	90	30	40	1,43	**PHP 40-AT10-45RSB**
		152,80	48	1	150,90	–	16	62	95	30	40	1,52	**PHP 40-AT10-48RSB**
		191,00	60	1	189,20	–	16	72	110	30	40	2,34	**PHP 40-AT10-60RSB**
10	**32**	57,29	18	1F	55,45	60	8	26	40	37	47	0,25	**PHP 47-AT10-18RSB**
		60,48	19	1F	58,65	66	8	28	44	37	47	0,29	**PHP 47-AT10-19RSB**
		63,66	20	1F	61,80	66	8	30	46	37	47	0,32	**PHP 47-AT10-20RSB**
		66,85	21	1F	65,00	71	8	32	49	37	47	0,36	**PHP 47-AT10-21RSB**
		70,03	22	1F	68,15	75	8	34	52	37	47	0,39	**PHP 47-AT10-22RSB**
		73,21	23	1F	71,35	77	8	36	55	37	47	0,43	**PHP 47-AT10-23RSB**
		76,39	24	1F	74,55	83	8	38	58	37	47	0,48	**PHP 47-AT10-24RSB**
		79,58	25	1F	77,75	83	8	39	60	37	47	0,53	**PHP 47-AT10-25RSB**
		82,76	26	1F	80,90	87	8	39	60	37	47	0,56	**PHP 47-AT10-26RSB**
		85,95	27	1F	84,10	91	8	39	60	37	47	0,60	**PHP 47-AT10-27RSB**
		89,25	28	1F	87,25	93	8	39	60	37	47	0,64	**PHP 47-AT10-28RSB**
		95,49	30	1F	93,65	99	8	39	60	37	47	0,74	**PHP 47-AT10-30RSB**
		101,86	32	1F	100,00	106	10	42	65	37	47	0,84	**PHP 47-AT10-32RSB**
		111,41	35	1F	109,55	115	10	45	70	37	47	0,96	**PHP 47-AT10-35RSB**
		114,59	36	1F	112,75	119	10	45	70	37	47	1,08	**PHP 47-AT10-36RSB**
		120,96	38	1F	119,10	125	10	48	75	37	47	1,20	**PHP 47-AT10-38RSB**
		127,32	40	1F	125,45	131	10	52	80	37	47	1,32	**PHP 47-AT10-40RSB**
		133,69	42	1	131,85	–	10	57	80	37	47	1,46	**PHP 47-AT10-42RSB**
		140,20	44	1	138,20	–	10	57	88	37	47	1,61	**PHP 47-AT10-44RSB**
		143,24	45	1	141,40	–	10	59	90	37	47	1,77	**PHP 47-AT10-45RSB**
		152,78	48	1	150,95	–	16	62	95	37	47	1,93	**PHP 47-AT10-48RSB**
		171,89	54	1	170,05	–	16	66	100	37	47	2,29	**PHP 47-AT10-54RSB**
		181,44	57	1	179,60	–	16	72	110	37	47	2,64	**PHP 47-AT10-57RSB**
		190,98	60	1	189,15	–	16	72	110	37	47	3,00	**PHP 47-AT10-60RSB**
10	**50**	57,29	18	1F	55,45	60	10	26	40	56	66	0,42	**PHP 66-AT10-18RSB**
		60,48	19	1F	58,65	66	10	28	44	56	66	0,47	**PHP 66-AT10-19RSB**
		63,66	20	1F	61,80	66	12	30	46	56	66	0,52	**PHP 66-AT10-20RSB**
		66,85	21	1F	65,00	71	12	32	49	56	66	0,55	**PHP 66-AT10-21RSB**
		70,20	22	1F	68,15	75	12	34	52	56	66	0,57	**PHP 66-AT10-22RSB**
		73,21	23	1F	71,35	77	12	36	55	56	66	0,65	**PHP 66-AT10-23RSB**
		76,39	24	1F	74,55	83	12	38	58	56	66	0,74	**PHP 66-AT10-24RSB**
		79,58	25	1F	77,75	83	12	39	60	56	66	0,77	**PHP 66-AT10-25RSB**
		82,76	26	1F	80,90	87	12	39	60	56	66	0,82	**PHP 66-AT10-26RSB**
		85,95	27	1F	84,10	90	12	39	60	56	66	0,95	**PHP 66-AT10-27RSB**
		89,25	28	1F	87,25	93	12	39	60	56	66	0,96	**PHP 66-AT10-28RSB**
		95,49	30	1F	93,65	99	12	39	60	56	66	1,17	**PHP 66-AT10-30RSB**
		101,86	32	1F	100,00	106	12	42	65	56	66	1,30	**PHP 66-AT10-32RSB**
		111,41	35	1F	109,55	115	16	45	70	56	66	1,47	**PHP 66-AT10-35RSB**
		114,59	36	1F	112,75	119	16	45	70	56	66	1,64	**PHP 66-AT10-36RSB**
		120,96	38	1F	119,10	125	16	48	75	56	66	1,82	**PHP 66-AT10-38RSB**
		127,32	40	1F	125,45	131	16	52	80	56	66	2,00	**PHP 66-AT10-40RSB**

Metric timing pulleys

10 mm pitch type AT pilot bore (RSB)

Pitch	Belt width	Pitch diameter	Number of teeth	Pulley type	Dimensions Outer diameter							Mass	Designation
		PD			OD	A	B Min.	Max.	H	F	L		
mm			–	–	mm							kg	–
10	**50**	133,69	42	1	131,85	–	16	57	80	56	66	2,18	**PHP 66-AT10-42RSB**
		140,20	44	1	138,20	–	16	57	88	56	66	2,36	**PHP 66-AT10-44RSB**
		143,24	45	1	141,40	–	16	59	90	56	66	2,59	**PHP 66-AT10-45RSB**
		152,78	48	1	150,95	–	16	62	95	56	66	2,83	**PHP 66-AT10-48RSB**
		171,89	54	1	170,05	–	16	66	100	56	66	3,34	**PHP 66-AT10-54RSB**
		181,44	57	1	179,60	–	16	72	110	56	66	3,85	**PHP 66-AT10-57RSB**
		190,98	60	1	189,15	–	16	72	110	56	66	4,37	**PHP 66-AT10-60RSB**

Smart Tools

Belt tools 324

Shaft alignment tools. 327

SKF Belt Frequency Meter PHL FM 10/400

One of the most accurate belt tension measurement methods
Correct belt tension is crucial for the whole drive system, its service life and the service life of associated components such as bearings and seals. Therefore, it is important to get accurate and reliable results when measuring belt tension.

The SKF Belt Frequency Meter is one of the most accurate tools available for measuring belt tension. Readings are quick, reliable and, most importantly, repeatable. The tool is extremely easy to use and minimizes the risk of errors.

Wide range of applications
The SKF Belt Frequency Meter consists of a hand-held meter and an optical sensor to provide contact-free belt tension measure- ments for most of the following belt types, even in a noisy environment:

- V-Belts (wrapped, cogged raw edge, ribbed)
- Banded V-Belts
- Timing belts

The SKF Belt Frequency Meter is capable of measuring belt vibration frequencies from 10 to 400 Hz. Based upon the measured belt frequency, the SKF Belt Frequency Meter calculates belt tensions up to 9 900 N *(2 200 lbs.)*.

Easy and quick to use
- Simply key-in the span length and mass data. Data can also be saved and recalled for repeated use, if necessary
- Aim sensor at centre of selected belt span and pluck or tap the belt
- The display will show the measured frequency which can be toggled to either newton or pound force values
- Readjust the belt tension, if necessary, and take another measurement to confirm correct tension

High quality belt drive maintenance – reduces time and effort

The SKF Belt Tension System is a motor base for electric motors. Due to the system's hydraulic cylinders, belt maintenance becomes an easy task. The SKF Belt Tension System allows quick belt replacement and tensioning, while not disturbing the initial alignment. By connecting a hand-held hydraulic pump, the cylinders of the SKF Belt Tension System can be moved up and down. This enables a controlled moving of the motor axis which is directly related to the belt tension and the pressure in the cylinders. This unique function allows for quick and easy belt tension checks as well as belt replacements.

Additional required and recommended tools: Only a hammer and a hand-held hydraulic pump, such as the SKF THPT1, are required for using the SKF Belt Tension System. Additionally, it is recommended that you use a laser alignment tool, e.g. the SKF Belt Alignment Tool TMEB 2, and the SKF Belt Frequency Meter for checking the tension of the belt when the SKF Belt Tension System is initially installed.

Selection guide for the SKF Belt Tension System:

Designation	IEC Motor class
PHL 160/180 H1	160 and 180
PHL 200/225 H1	200 and 225
PHL 250/280 H1	250 and 280
PHL 315 H1	315
PHL 355 H1	355
PHL 400 H1	400

In addition, several NEMA standard motors can be mounted on the SKF Belt Tension System.
To do this, please contact SKF for additional information.

Various benefits for the belt drive achieved by use of this system

- Alignment is necessary only once, independent of the number of belt replacements
- Safe, simple and fast belt replacement
- Less costly, time-consuming breakdowns of the whole system
- Less vibration improves system efficiency
- Quick and reliable tension checks
- Easy preventive maintenance
- Repeatable maintenance quality
- Reduced costs due to prolonged belt life

SKF Belt Alignment Tool TMEB 2

Belt-driven machinery downtime caused by misalignment is a thing of the past
The SKF Belt Alignment Tool, TMEB 2, aligns the pulleys where it counts most – in the grooves. V-guides and powerful magnets allow the TMEB 2 to be fitted in the grooves of the pulley. With only two components, a laser-emitting unit and a receiver unit, the TMEB 2 is fast and easy to attach. The three-dimensional target area on the receiver unit allows the easy detection of misalignment as well as its nature; whether it is horizontal, vertical, parallel or a combination of all three. Armed with this precise information, the operator can easily make the appropriate adjustments until the laser line corresponds with the reference line on the receiver unit.

Versatile and user-friendly
- Powerful magnets allow fast and easy attachment
- Easy-to-use, requires no special training to operate
- Three-dimensional target area simplifies the alignment process
- Facilitates simultaneous adjustment of tension and alignment
- V-guides facilitate the alignment of a wide range of V-belt pulleys
- Special side adaptor, allowing alignment of multi-ribbed and timing belt pulleys as well as chain sprockets, is available as accessory
- A maximum operating distance of 6 meters *(20 ft.)* makes it suitable for use in various applications
- Sturdy aluminium housings provide great assembly stability and accuracy

Pinpoint accuracy with laser technology
- Aligns grooves of the pulley rather than its face, allowing the alignment of pulleys of unequal width or with dissimilar faces - even fits applications where the pulley face cannot be used as a reference
- No trial and error. The laser position indicates the nature of misalignment allowing easy and accurate adjustment

Pinpoint accurate alignment simply achieved

The SKF Shaft Alignment Tools, TKSA series, offer you simplicity with a high degree of accuracy.

Measuring, aligning and documenting
These highly innovative tools feature a three-step process for measuring and correcting alignment. First, measure the machinery's current alignment status. Then, align the machine vertically and horizontally. Finally, document and keep track of the alignment activities.

These three simple steps allow you to easily and effectively align shafts using advanced laser technology.

Features
- Easy-to-use, three-step process: measure-align-document
- Compact, lightweight design
- Spirit levels allow easy and fast positioning of the measuring units
- Measurements in millimetres or inches facilitate worldwide use
- Supplied in sturdy, lightweight carrying cases for portability

The quick, easy and affordable laser shaft alignment tool

The TKSA 20 is an easy–to–use laser shaft alignment tool, which requires no special training to operate. Compared to traditional dial indicator methods, the shaft alignment process is greatly simplified, as no additional calculations are required in order to make the necessary adjustments.

Features

- Alignment actions displayed: Clear “real-time” coupling and feet values, given during the alignment process, make alignment corrections quick and easy
- Soft foot check: “Soft foot” function helps determine if the machine is standing evenly on all feet; an essential check for good shaft alignment
- Easy pre-alignment: For machines that are grossly misaligned, the laser lines and scales enable rapid pre-alignment
- Easy for inexperienced users: Quick Start Guide allows virtually any technician to quickly become familiar with the process. Full instructions, instructional video and alignment report forms in multiple languages supplied on a CD
- The attractively priced TKSA 20 easily provides a short return on investment

The intuitive laser shaft alignment tool allows results to be stored and shared

The TKSA 40 is intuitive in operation, thanks to its animated graphical interface. Not only is it quick and easy to use, but alignment results can be stored and shared using a USB cable and a PC. Compared to traditional methods, the shaft alignment process is greatly simplified; just follow the instructions on the screen to make a precise alignment.

Features

- Intuitive: Animated graphical interface on a 4 inch back-lit screen and alphanumeric key functions simplify the whole process
- Alignment actions displayed: Clear “real-time” coupling and feet values, given during the alignment process, make alignment corrections quick and easy
- Built-in alignment recommendation: Predefined and user definable tolerance tables greatly simplify assessment of the alignment
- Alignment data sharing: Alignment settings and results can be stored in the internal memory or downloaded via USB cable to a PC. Files are easily shared with others without the need of special software.
- Soft foot check: “Soft foot” function helps determine if the machine is standing evenly on all feet; an essential check for good shaft alignment
- Easy pre-alignment: For machines that are grossly misaligned, the laser lines and scales enable rapid pre-alignment
- Easy for all users: A Quick Start Guide and intuitive menus allow virtually any technician to quickly be familiar with the process. Full instructions are supplied on a CD in multiple languages

Shaft alignment tools
TMAS shim kits

For accurate vertical machinery alignment
Accurate machine adjustment is an essential element of any alignment process. SKF single slot pre-cut shims are available in five different dimensions and in ten different thicknesses.

- Made of high quality stainless steel allowing re-use
- Easy to fit and to remove
- Close tolerances for accurate alignment
- Thickness clearly marked on each shim
- Fully de-burred
- Pre-cut shims are supplied in packs of 10 and complete kits are also available

Contents TMAS Shim Kits

TMAS 340									
Thickness (mm)	0,05	0,10	0,20	0,25	0,40	0,50	0,70	1,00	2,00
Size (mm)	**Quantities:**								
100x100	20	20	20	20	20	20	20	20	10
125x125	20	20	20	20	20	20	20	20	10
TMAS 360									
Thickness (mm)	0,05	0,10	0,25	0,50	1,00	2,00			
Size (mm)	**Quantities:**								
50x50	20	20	20	20	20	20			
75x75	20	20	20	20	20	20			
100x100	20	20	20	20	20	20			
TMAS 510									
Thickness (mm)	0,05	0,10	0,20	0,25	0,40	0,50	0,70	1,00	2,00
Size (mm)	**Quantities:**								
50x50	20	20	20	20	20	20	20	20	10
75x75	20	20	20	20	20	20	20	20	10
100x100	20	20	20	20	20	20	20	20	10
TMAS 720									
Thickness (mm)	0,05	0,10	0,20	0,25	0,40	0,50	0,70	1,00	2,00
Size (mm)	**Quantities:**								
50x50	20	20	20	20	20	20	20	20	20
75x75	20	20	20	20	20	20	20	20	20
100x100	20	20	20	20	20	20	20	20	20
125x125	20	20	20	20	20	20	20	20	20

TMAS 340

TMAS 360

TMAS 510

TMAS 720

® SKF is a registered trademark of the SKF Group.

Hytrel is a registered trademark of DuPont. Dacromet and Dacrotized are registered trademarks of Metal Coatings International Inc. Corporation.

© SKF Group 2014
The contents of this publication are the copyright of the publisher and may not be reproduced (even extracts) unless prior written permission is granted. Every care has been taken to ensure the accuracy of the information contained in this publication but no liability can be accepted for any loss or damage whether direct, indirect or consequential arising out of the use of the information contained herein.

PUB PT/P1 11015 EN · Edition 3 · December 2014

This publication supersedes publication PUB PT/P1 11015 EN.

skf.com
skfptp.com